Annual Energy Audit Report (FY2022-23)

TP Southern Odisha Distribution Limited (TPSODL)

(DC No: DIS0042OD)

Submitted to

TP SOUTHERN ODISHA DISTRIBUTION LIMITED

CORPORATE OFFICE
BERHAMPUR, GANJAM, ODISHA- 760004
www.tpsodl.com

Submitted by

EAST COAST SUSTAINABLE PRIVATE LIMITED

6-80/1, PRIYA GARDENS,
P.O.-SIMHACHALAM, VISAKHAPATNAM,
ANDHRA PRADESH – 530028.
CIN: U74999AP2018PTC108807
www.eastcoast.net.in

July 2023

East Coast Sustainable Private Limited
6-80/1, Priya Gardens, Near Swamy Kalyana Mandapam
P.O. Simhachalam, Visakhapatnam – 530028
Andhra Pradesh, India
Ph: +91-9705300059, Web: www.eastcoast.net.in

Date: 04-08-2023,
Visakhapatnam.

To
Mr. Saumitro Banerjee, Head - CMG & MMG
TPSODL, Corporate Office
Brahmapur, Ganjam
Odisha- 760004.

Subject: Annual Energy Audit Report of TP Southern Odisha Distribution Limited (TPSODL), Brahmapur (Designated Consumer Number: DIS0042OD)

Dear Sir,

We are pleased to place before you the Annual Energy Audit Report of TP Southern Odisha Distribution Limited (TPSODL), (Designated Consumer Number: DIS0042OD) prepared as per the Bureau of Energy Efficiency regulations for Manner and Intervals for Conduct of Energy Audit in electricity distribution companies (vide Bureau of Energy Efficiency notification dated 6th October 2021) for FY 2022-23.

G Srinivasa Rao
Accredited Energy Auditor (AEA-0251)
Director
M/s East Coast Sustainable Pvt. Ltd.
Email: srinivasa.gandepalli@eastcoast.net.in
Mobile: +91 - 97053 00059.

G. Srinivasa Rao, MIE
Accredited Energy Auditor (BEE)
CEA-1574, AEA-0251

East Coast Sustainable Pvt. Ltd.

ACKNOWLEDGEMENT

East Coast Sustainable Pvt Limited (ECSPL) places on records its deep gratitude to the progressive management of TP Southern Odisha Distribution Limited (TPSODL), Odisha for entrusting the work of Annual Energy Audit for FY 2022-2023 as per BEE regulations.

ECSPL wishes to thank the following officials for their kind support extended during Annual Energy Audit.

- Mr. Saumitro Banerjee, Head, CMG & MMG
- Mr. Mahishikar Krishna Chaitanya, Head of Group-Energy Audit
- Mr. Vaibhav Kumar Singh, Team Lead (Energy Audit)
- Mr. Ratan Kuber, Energy Manager (Lead Engineer- Energy Audit)
- Ms. Shephali Gupta, Lead Engineer (Energy Audit)
- Mr. Basudev Nandi, Team Lead (Energy Audit)

ECSPL also wishes to thank all other executives and staff of TPSODL for their excellent cooperation and support for successful completion of Annual Energy audit.

ANNUAL ENERGY AUDIT TEAM
EAST COAST SUSTAINABLE PRIVATE LIMITED
VISAKHAPATNAM

STUDY TEAM

Team-1: Energy Audit Cell of DISCOM

Sr. No	Name	Designation	Wing	Email ID	Contact Number
Nodal Officer					
1	Mr. Saumitro Banerjee	Head – CMG, MMG	Commercial	saumitro.banerjee@tpsouthernodisha.com	9810281982
Energy Manager					
2	Mr. Ratan Kuber	Lead Engineer	Energy Audit	ratan.kuber@tpsouthernodisha.com	9777333245
Information Technology Manager					
3	Mr. Dusmanta Kumar Rout	Head of Group – IT	IT	dusmanta.rout@tpsouthernodisha.com	9337229715
Financial Manager					
4	Mr. Deepak Jain	Financial Controller	Finance	deepak.jain@tpsouthernodisha.com	9958181337
Other Member of Energy Cell					
5	Mr. Mahishikar Krishna Chaitanya	Head of Group	Energy Audit	krishna.m@tpsouthernodisha.com	9971393924
6	Mr. Vaibhav Kumar Singh	Team Lead	Energy Audit	vaibhavkr.singh@tpsouthernodisha.com	9871984689
7	Ms. Shephali Gupta	Lead Engineer	Energy Audit	shephali.gupta@tpsouthernodisha.com	6395999014
8	Mr. Basudev Nandi	Team Lead	Energy Audit	basudev.nandi@tpsouthernodisha.com	8670189189

Team-2: Energy Audit Team of EmAEA

Sr. No	Name	Qualification	EmAEA/AEA/EA/EM Registration No.	Experience in years	Sector
Team Leader					
1	Mr. G. Srinivasa Rao	B. Tech Mechanical, PGD Energy, Management MS (Environmental Management and Policy)	AEA-0251	26	All
Team Head/Sector Expert					
2	Mr. S. Janardhana Rao	MBA, Finance, AU, PGDM, Energy Management, B. Tech (E.E.E)	EA-8801	33	DISCOM
Certified Energy Auditor					
3	Mr. P. V. Ramprasad	B. Tech Mechanical, PGD Energy Management, M. B. A, Certified Energy Auditor.	CEA - 1573	28	All
Team Member					
4	Mr. K. Lokeswara Rao	M. Tech (Mechanical)	-	2	-
5	Ms. J. Sai Sowmya	B. Tech (Electrical)	-	1	-

TABLE OF CONTENTS

ACKNOWLEDGEMENT ..... **i**
STUDY TEAM ..... **ii**
TABLE OF CONTENTS ..... **iv**
1. EXECUTIVE SUMMARY **1**
1.1 ENERGY ACCOUNTS AND PERFORMANCE FOR FY 2022-23 1
1.1.1 DISCOM WIDE ENERGY ACCOUNTING 1
1.2 PEAK LOAD 3
2. SUMMARY OF CRITICAL ANALYSIS OF ENERGY AUDITOR AND MANAGEMENT ANALYSIS **4**
2.1 CRITICAL ANALYSIS BY ENERGY AUDITOR 4
2.1.1 11KV FEEDER METERING AND ENERGY AUDIT 4
2.1.2 DTR METERING AND ENERGY AUDIT 4
2.1.3 CATEGORY WISE SUBSIDY FOR FY 2022-23 4
2.1.4 ANALYSIS ON T&D LOSS AND AT&C LOSS 4
2.2 SUMMARY OF DISCOM MANAGEMENT ANALYSIS 7
3. BACKGROUND **10**
3.1 EXTANT REGULATIONS AND ROLE OF BEE 10
3.2 PURPOSE OF AUDIT AND ACCOUNTING REPORT 13
3.3 PERIOD OF ENERGY AUDITING AND ACCOUNTING 13
4. INTRODUCTION OF DISCOM **14**
4.1 NAME AND ADDRESS OF DESIGNATED CONSUMER 14
4.2 NAME AND DETAILS OF ENERGY MANAGER AND AUTHORISED SIGNATORY OF DC 14
4.3 SUMMARY PROFILE OF DC 14
4.3.1 ASSETS 14
4.3.2 ENERGY FLOW 15
4.3.3 CONSUMER BASE 17
4.3.4 SALIENT FEATURES 18
5. DISCUSSION AND ANALYSIS **19**
5.1 ENERGY ACCOUNTS FOR PREVIOUS YEARS 19
5.2 ENERGY ACCOUNTS AND PERFORMANCE OF FY 2021-22 20
5.2.1 DISCOM WIDE ENERGY ACCOUNTING 20
5.2.2 DIVISION WISE LOSSES 22

5.2.3 VOLTAGE WISE INPUT AND LOSSES 23
5.3 ENERGY CONSERVATION MEASURES ALREADY TAKEN AND PROPOSED FOR FUTURE 23
5.3.1 CAPEX program for FY 2022-23 by TPSODL: 23
5.3.2 CAPEX program proposed for FY 2023-24 by TPSODL: 25
5.3.3 DSM program taken by TPSODL for FY 2022-23: 25
5.4 CRITICAL ANALYSIS BY ENERGY AUDITOR 28
5.4.1 STATUS OF COMPLIANCE TO BEE REGULATIONS 28
5.4.2 11KV FEEDER METERING AND ENERGY AUDIT 37
5.4.3 DTR METERING AND ENERGY AUDIT 37
5.4.4 CATEGORY WISE SUBSIDY FOR FY 2022-23 37
5.4.5 ANALYSIS ON T&D LOSS AND AT&C LOSS 37
5.5 INCLUSION AND EXCLUSIONS 39
6. NOTES OF THE EA/EM ALONG WITH QUERIES AND REPLIES TO DATA GAPS 40
6.1 Query by EA, response by EM and Notes by EA 40
7. ANNEXURES 41
7.1 INTRODUCTION OF VERIFICATION FIRM: 41
7.2 MINUTES OF MEETING WITH THE DISCOM TEAM 41
7.3 CHECK LIST PREPARED BY AUDITING FIRM 42
7.4 BRIEF APPROACH, SCOPE & METHODOLOGY FOR AUDIT 42
7.5 INFRASTRUCTURE DETAILS 43
7.6 ELECTRICAL DISTRIBUTION SYSTEM 43
7.7 POWER PURCHASE DETAILS 43
7.8 LINE DIAGRAM (SLD) 44
7.9 CATEGORY OF SERVICE DETAILS (WITH CONSUMER AND VOLTAGE - WISE) 45
7.10 LIST OF DOCUMENTS VERIFIED WITH EACH PARAMETER: 45
7.11 BRIEF DESCRIPTION OF UNIT 46
7.12 LIST OF PARAMETERS ARRIVED THROUGH CALCULATION OR FORMULAE WITH LIST OF DOCUMENTS AS SOURCE OF DATA 46
8. FORMATS 47
8.1 GENERAL INFORMATION 47
8.2 PERFORMANCE SUMMARY OF ELECTRICITY DISTRIBUTION COMPANY 47
8.3 DETAILS OF INPUT INFRASTRUCTURE 47

8.4 INPUT ENERGY: A. SUMMARY OF ENERGY INPUT AND INFRASTRUCTURE 47
8.5 DETAILS OF INPUT ENERGY SOURCES 47
8.6 DIVISION-WISE LOSSES 47
8.7 DETAILS OF FEEDER-WISE LOSSES 47
8.8 DETAILS OF SUBSIDY CLAIMED AND RECEIVED 48
8.9 DETAILS OF DT METERING 48
8.10 DT WISE LOSSES TO THE EXTENT DT METERS ARE EXISTING 48
9. FIELD VERIFICATION DATA AS PER S.O.P 49
9.1 FIELD VISITS: 49
9.2 FIELD VERIFICATION DATA ON SAMPLE BASIS AS PER SOP: 53

List of Tables

Table- 1 Net Energy Input to TPSODL 1
Table- 2 Summary of Losses of TPSODL 1
Table- 3Range of Technical and AT&C losses 5
Table- 4 Divisions with High T&D loss 5
Table- 5 Divisions with Collection Efficiency less than the Average Collection Efficiency 6
Table- 6 Category wise Collection Efficiency 6
Table- 7 Details of Energy Manager and Authorized Signatory of DC 14
Table- 8 Infrastructure Details 14
Table- 9 Energy Flow of TPSODL 15
Table- 10 Category wise Consumer Details 17
Table- 11 Metering Status at different Voltage Levels 17
Table- 12 Net Energy Input to TPSODL 20
Table- 13 Summary of Losses of TPSODL 20
Table- 14 Category wise Energy Account of TPSODL 21
Table- 15Voltage wise Input, Sale and Loss 23
Table- 16 Status of Compliance to BEE Regulation 28
Table- 17Range of Technical and AT&C losses 37
Table- 18 Divisions with High T&D loss 38
Table- 19 Divisions with Collection Efficiency less than Average Collection efficiency 38
Table- 20 Category wise Collection Efficiency 39
Table- 21Query EA by and response by EM 40

1. EXECUTIVE SUMMARY

Bureau of Energy Efficiency (BEE) notified the Bureau of Energy Efficiency (Manner and Intervals for Conduct of Energy Audit (Accounting) in Electricity Distribution Companies) Regulations, 2021 on 6th October 2021. As per the regulation, all Electricity Distribution Companies are mandated to conduct annual energy audit and periodic energy accounting on quarterly basis.

Owing to the impact of energy auditing on the entire distribution and retail supply business and absence of an existing framework with dedicated focus on the same, it was imperative to develop a set of comprehensive guidelines that all Distribution utilities across India can follow and adhere to.

1.1 ENERGY ACCOUNTS AND PERFORMANCE FOR FY 2022-23

1.1.1 DISCOM WIDE ENERGY ACCOUNTING

The net energy input to the DISCOM for FY 2022-2023 is estimated and presented in the following table:

Table- 1 Net Energy Input to TPSODL

S.No.	Parameters	Period From 2022 To 2023
1	Input Energy purchased (MU)	4203.95
2	Transmission loss (%)	NA
3	Transmission loss (MU)	0
4	Energy sold outside the periphery (MU)	0
5	Open access sale (MU)	0
6	EHT sale (MU)	705.68
7	Net input energy (received at DISCOM periphery or at distribution point)-(MU)	4203.95

The technical losses and AT & C losses for FY 2022-2023 are estimated and presented in the following table:

Table- 2 Summary of Losses of TPSODL

	T&D Loss		Collection Efficiency (%)	AT& C Loss (%)
	T&D Loss (MU)	T&D Loss (%)		
Total Losses	1049.48	24.96%	98.51%	26.08%

The total sales (metered and assessed) for various consumer categories are presented in the following table:

S.No	Type of Consumers	Category of Consumers (EHT/HT/LT/Others)	Voltage Level (In Voltage)	No of Consumers	Total Consumption (In MU)
1	Domestic	HT/LT	11000/400/230	2172186	1445.40
2	Commercial	HT/LT	11000/400/230	102275	313.83
3	Water Supply	HT/LT	33000/11000/400/230	5242	63.42
4	Public Lighting	LT	400/230	6712	35.95
5	HT Water Supply	HT	33000/11000	71	29.33
6	HT Industrial	EHT/HT	220000/ 132000/ 33000/ 11000/ 400	318	642.91
7	Industrial (Small)	HT/LT	11000/400	2540	11.50
8	Industrial (Medium)	HT/LT	11000/400	1948	63.76
9	HT Commercial	HT/LT	33000/11000/400	138	42.02
10	Applicable to Government Hospitals & Hospitals				
11	Lift Irrigation Schemes/Lift Irrigation Societies	HT/LT	11000/ 33000/ 400/230	32413	108.36
12	ALLIED AGRICULTURE ACTIVITIES	HT/LT	11000/ 33000/ 400/230	1433	30.94
13	ALLIED AGRO-INDUSTRIAL ACTIVITIES	HT/LT	11000/ 33000/400	81	2.74
14	RAILWAY TRACTION	EHT	220000/ 132000	12	290.44
15	SPECIFIED PUBLIC PURPOSE	HT/LT	11000/ 33000/ 400/230	16124	73.87
			Total	**2341493**	**3154.46**

1.2 PEAK LOAD

The peak load recorded in the F.Y.2022-23 is 722 MW in the month of March-23. The total connected load of the consumer is 3061.3 MW. The capacity of PTR is 2427.13 MVA in the F.Y.2021-22 and during the F.Y.2022-23 29 Nos. PTRs with 167.17 MVA are added. And at the same time existing DTRs 2405.23 MVA during F.Y.2021-22 and the DTRs added during the F.Y.2022-23 is 2772 Nos. with 129.74 MVA making total capacity of 2534.97 MVA.

2. SUMMARY OF CRITICAL ANALYSIS OF ENERGY AUDITOR AND MANAGEMENT ANALYSIS

2.1 CRITICAL ANALYSIS BY ENERGY AUDITOR

COMPLIANCE TO BEE REGULATION:

The DISCOM has been submitting quarterly periodic energy accounts as per BEE regulations as well as posting the details on its website. The DISCOM also constructed Energy Audit Cell as per the regulations

2.1.1 11KV FEEDER METERING AND ENERGY AUDIT

Out of total 906 11 kV feeders 713 no. of 11 kV feeders are communicable meters with AMR. Due to mapping issue DC has provided meter readings data converted from meter dumps for only 93 no. of 11 kV feeders. The sample 11 kV feeder wise energy audit is presented as Annexure-3.

2.1.2 DTR METERING AND ENERGY AUDIT

DC has already installed smart meters for all government consumers. DC has started installing smart meters for DTRs. 16000 smart meters will be installed with smart meter on DTRs capacity above 25KVA by Dec 2023 of which 1088 Nos DTRs are metered and rest by March 2025.

2.1.3 CATEGORY WISE SUBSIDY FOR FY 2022-23

DC does not receive any tariff subsidy from the government.

2.1.4 ANALYSIS ON T&D LOSS AND AT&C LOSS

- **% Losses – Aggregate**:

  The overall Technical Loss (T&D Loss) is 24.96% and overall AT&C Loss is 26.08% for FY 2022-2023. This reflects an overall collection efficiency of 98.51%.

- **% Losses –Voltage Wise**:

  The overall losses for LT voltage level are 23.89%, 11kV voltage level is 8.54% and 33kV level is 3.85% for FY 2022-2023.

- **% Losses –Division wise**:

The range of T&D losses, collection efficiency and AT&C losses among the divisions is tabulated below:

Table- 3Range of Technical and AT&C losses

Description	Data
T&D loss	24.96%
T&D loss Range	7.73% to 56.96%
Division With highest T&D loss	AED-I
Division With lowest T&D loss	BED-I
Collection Efficiency	98.51%
Collection Efficiency Range	69.75% to 106.61%
Division With highest Collection Efficiency	GNED
Division With lowest Collection Efficiency	NED
AT & C loss (%)	26.08%
AT & C loss Range	3.44% to 59.34%
Division With highest AT&C loss	AED-II
Division With lowest AT&C loss	BED-I

The following divisions of the DISCOM are having T&D losses more than the average value and requires special attention

Table- 4 Divisions with High T&D loss

S No	Average T&D Loss	Divisions with More than Average T&D loss	T&D Loss %
1	24.96%	MED	25.43%
2		GSED	26.12%
3		PED	29.86%
4		NED	32.72%
5		BNED	33.73%
6		BoED	36.23%
7		HED	39.55%
8		PSED	44.09%
9		AED-II	56.41%
10		AED-I	56.59%

The following divisions of the DISCOM are having Collection Efficiency less than the average value and require special attention:

Table- 5 Divisions with Collection Efficiency less than the Average Collection Efficiency

S No	Average Collection Efficiency	Divisions with Less than Average Collection Efficiency	Collection Efficiency %
1	98.51%	NED	69.75%
2		MED	83.53%
3		BoED	90.60%
4		AED-II	93.27%
5		KED	93.27%
6		PKED	95.29%
7		PED	97.45%
8		JED	97.83%

- **Category wise Losses**:

Category wise input energy cannot be estimated on account of mixed feeders. Accordingly, T&D Losses and AT&C Losses for consumer categories could not be provided. However, collection efficiencies of various consumer categories are tabulated below:

Table- 6 Category wise Collection Efficiency

Sl. No.	Category	Collection Efficiency
1	Residential	84.71%
2	Agricultural	67.92%
3	Commercial/Industrial-LT	111.08%
4	Commercial/Industrial-HT	106.12%
5	Others	107.45%
Overall		**98.51%**

2.2 SUMMARY OF DISCOM MANAGEMENT ANALYSIS

TPSODL have initiated various activities to improve the performance parameters in Reliability, AT&C, Safety, Technology and building or strengthening infrastructure. Some major activities are:

Deployment of Smart Metering System (Prepaid/Postpaid) in TPSODL:

TPSODL has been committed to provide its consumers ever improving experience using the best technology. In this journey of excellence and digital transformation, we have added another feature in our cap by installing Smart Meters (Prepaid/Postpaid) at consumer premises w.e.f. 26/03/2022, as per OERC Supply Code, 2019, CHAPTER V, 97. (iv), (3) & The Ministry of Power Government of India's Gazette notification vide No. F. No. 23/35/2019 -R&R Dt. 17.08.2021. So far, we have installed 7000+ Smart Meters at TPSODL in Government establishments & Non-Govt. Consumers and during FY 22-23 we will install 64,000 meters covering all categories of consumers and 16000 meters for DTR metering for energy audit purpose.

Smart Metering System shall provide the following benefit to our consumers: -

1. Meter is equipped with bidirectional communication therefore billing shall happen without any human intervention eliminating billing errors.
2. Quick disposal of power failure, as it facilitates quicker detection of outages.
3. Empowerment to consumers to see records of their consumption history and monitor electricity consumption on a real-time basis so giving an opportunity to switch off non-essential load.

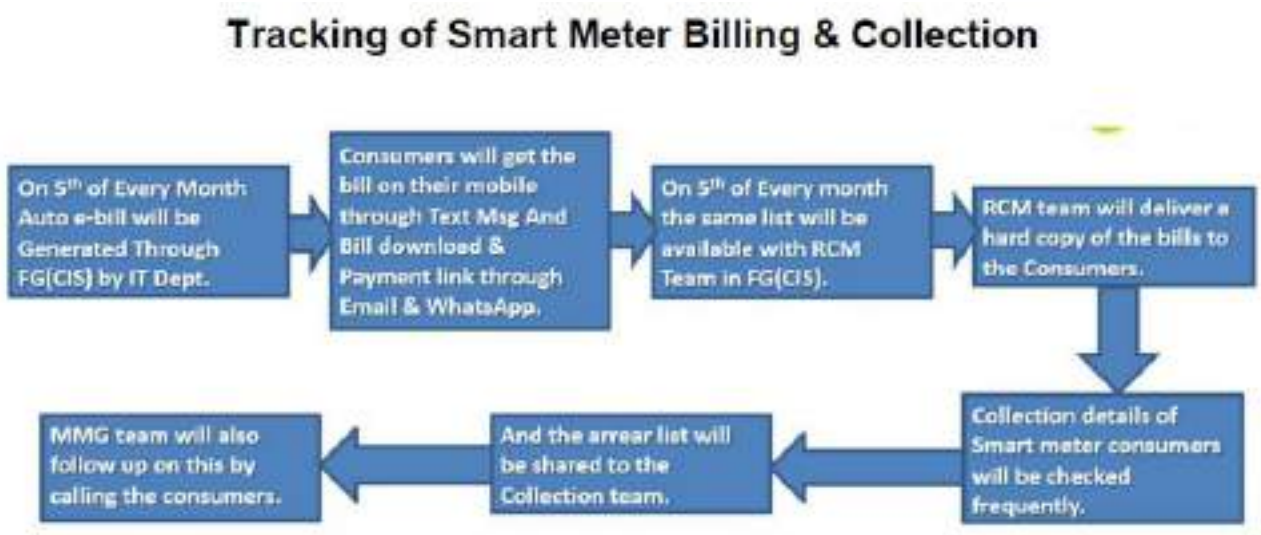

Sarthi 2.0 Energy Audit Application:

Overview:

Sarthi 2.0 Energy Audit Application is a web-based platform developed for Distribution Companies (DISCOMs) across the power industry to provide comprehensive Energy Audit Reports at various voltage levels [0.4KV/11KV/33KV/66KV/132KV]. It offers improved customization by providing interactive and user-friendly portals. It has simplified the issues by integrating various data sources like GIS, SAP etc.

Introduction:

Sarthi 2.0 -EAA is developed for Distribution Companies (DISCOMs) to track its Energy Inflows at all voltage levels. With this Energy Accounting Portal DISCOMs will develop a comprehensive Energy Accounting system to quantify and determine actual losses in power distribution system, separated across technical & commercial loss.
An energy audit Application can identify energy-saving opportunities by calculating the loss levels. It will also help in understanding energy usage and ways to use energy better.

Purpose:

a. Understanding how energy is used within the system or process, and where it is wasted.
b. Finding alternative measures to reduce energy losses and improve the overall performance.

Requirement:

An energy audit is an inspection survey and an analysis of energy flows for energy conservation. It may include a process or system to reduce the amount of energy input into the system without negatively affecting the output. In DISCOMs, an energy audit is the first step in identifying opportunities to reduce energy expense and carbon footprint.
Ministry of Power (MOP) has directed Power Distribution Companies (DISCOMs) to undertake Energy Auditing periodically to develop a comprehensive Energy Accounting system to quantify Distribution losses. Bureau of Energy Efficiency (BEE) has issued regulations in this regard with the ministry's approval under the Energy Conservation Act 2001. In pursuant to regulation 4(2) (b) of BEE: -

a. Intervals of time for conduct of Annual energy audit

   Every electricity distribution company shall conduct an annual energy audit for every financial year and submit the annual energy audit report to the Bureau and respective State Designated Agency.

b. Intervals of time for conduct of periodic energy accounting. -

   Every electricity distribution company shall —

i. Ensure that all feeder wise, circle wise and division wise periodic energy accounting shall be conducted by the energy manager of the electricity distribution company for each quarter of the financial year
ii. Submit the periodic energy accounting report to the Bureau and respective State Designated Agency and also made available on the website of electricity Distribution Company within forty-five days from the date of the periodic energy accounting.

GIS (Geographic Information System):

GIS was implemented on pilot scale in City Circle in FY 22. It covered 9 sections out of total 18 in City Circle. As part of the pilot project, the GIS platform will be integrated with various other systems like FG (for Customer Information System), MO Bidyut etc., for new connection, SCADA ADMS for energy audit and AMI, CYME (network loss analysis) etc., in FY 23. The integrations will be further leveraged in FY 2023-24 to ensure commercial loss reduction across TPSODL, better consumer services and asset management.

In continuance of the pilot and its success, the GIS was extended to cover remaining 9 sections of City Circle, entire circle of Aska and Berhampur in FY 2022-23. Accordingly, the bids were invited to complete the network and consumer survey, mapping and migration for almost 9 lakh consumers in these three circles. The work is in progress and it is planned to cover all three circles by end of FY 23. It is now proposed that in FY2023 24, network survey, asset mapping and consumer indexing for balance three circles namely Bhanjanagar, Rayagada and Jeypore will be undertaken.

SCADA (Supervisory Control and Data Acquisition):

Implementation of SCADA in 33/11 KV PSS:

- 15 Nos. NON ODSSP PSS SCADA integrated.
- 81 Nos. ODSSP PSS SCADA integrated

These conventional substations are being planned with capabilities of being remotely managed with the help of communicable devices viz. relays, IEDs, RTUs, 84 and routers with which the connectivity and integration with SCADA shall be implemented. These SCADA enabled substations shall bring in higher levels of operational efficiency and system performance.

3. BACKGROUND

3.1 EXTANT REGULATIONS AND ROLE OF BEE

Bureau of Energy Efficiency (BEE) notified the Bureau of Energy Efficiency (Manner and Intervals for Conduct of Energy Audit (Accounting) in Electricity Distribution Companies) Regulations, 2021 on 6th October 2021. As per the regulation, all Electricity Distribution Companies are mandated to conduct annual energy audit and periodic energy accounting on quarterly basis.

Owing to the impact of energy auditing on the entire distribution and retail supply business and absence of an existing framework with dedicated focus on the same, it was imperative to developing a set of comprehensive guidelines that all Distribution utilities across India can follow and adhere to.

These Regulations for Energy audit in Electricity Distribution Companies provides broad framework for conduct of Annual Energy Audit through and Quarterly Periodic Energy Accounting with necessary Pre-requisites and reporting requirements to be met.

The extant regulations relevant or reproduced as under,

A. **Pre-requisites for annual energy audit and periodic energy accounting:** every electricity distribution company shall undertake all actions as may be required for the annual energy audit and periodic energy accounting before the start of the relevant financial year, including the following actions, namely: —

i. The identification and mapping of all of the electrical network assets;
ii. The identification and mapping of high tension and low-tension consumers;
iii. The development and implementation of information technology enabled energy accounting and audit system, including associated software;
iv. The electricity distribution company shall ensure the installation of functional meters for all consumers, transformers and feeders: Provided that meter installation may be done in a phased manner within a period of three financial years from the date of the commencement of these regulations in accordance with the trajectory Setout in the First Schedule;
v. All distribution transformers (other than high voltage distribution system up to 25KVA and other distribution system below 25 KVA) shall be metered with communicable meters. And existing non-communicable distribution transformer meters shall be replaced with communicable meters and integrated with advanced metering infrastructure;
vi. The electricity distribution company shall establish an information technology enabled system to create energy accounting reports without any manual interference: Provided that such system may be established—
(i) Within a period of three years from the date of the commencement of these regulations in case of urban and priority area consumers; and
(ii) Within five years from the date of the commencement of these regulations in case of rural consumers;

(g) The electricity distribution company shall create a centralized energy accounting and audit cell comprising of—

- a nodal officer, an energy manager and an information technology manager, having professional experience of not less than five years; and
- a financial manager having professional experience of not less than five years;

(h) Any other requisite that Bureau may direct for energy audit and accounting purpose.

B. Reporting requirements for annual energy audit and periodic energy accounting:

i. Every electricity distribution company shall designate a nodal officer, who shall be a full-time employee of the electricity distribution company in the rank of the Chief Engineer or above, for the purpose of reporting of the annual energy audit and periodic energy accounting and communicate the same to the Bureau. Every electricity distribution company shall ensure that the energy accounting data is generated from a metering system or till such time the metering system is not in place, by an agreed method of assumption as may be prescribed by the State Commission.

ii. Metering of distribution transformers at High Voltage Distribution System up to 25KVA can be done on cluster meter installed by each electricity distribution company.

iii. The energy accounting and audit system and software shall be developed to create monthly, quarterly and yearly energy accounting reports.

iv. Every electricity distribution company shall provide the details of the information technology system in place as specified in clause (f) of regulation 5 that ensures minimal manual intervention in creating the energy accounting reports and any manual intervention of any nature, in respect of the period specified therein, shall be clearly indicated in the periodic energy accounting report.

C. Manner of annual energy audit and periodic energy accounting:

i. Every annual energy audit and periodic energy accounting under these regulations shall be conducted in the following manner, namely: —

ii. Verification of existing pattern of energy distribution across periphery of electricity distribution company; and

iii. Verification of accounted energy flow submitted by electricity distribution company at all applicable voltage levels of the distribution network:

- Energy flow between transmission and 66kV/33kV/11kV incoming distribution feeders;
- Energy flow between 66kV/33kV outgoing and 11kV/6.6kV incoming feeders;
- Energy flow between 11 kV/6.6kV feeders and distribution transformers, or high voltage distribution system;
- Energy flow between distribution transformer, or high voltage distribution system to end consumer, including ring main system;
- Energy flow between Feeder to end-consumer; and
- Energy flow between 66/33/11 kV directly to consumer.

iv. The accredited energy auditor, in consultation with the nodal officer of the electricity distribution company shall:
- Develop a scope of work for the conduct of energy audit required under these regulations;
- Agree on best practice procedures on accounting of energy distributed across the network; and
- Collect data on energy received, and distributed, covered within the scope of energy audit.

v. The accredited energy auditor shall:
- Verify the accuracy of the data collected in consultation with the nodal officer of the electricity distribution companies as per standard practice to assess the validity of the data collected; and
- Analyse and process the data with respect to:
  - ✓ Consistency of data monitoring compared to the collected data;
  - ✓ Recommendations to facilitate energy accounting and improve energy efficiency.
  - ✓ With respect to the purpose of energy accounting in reducing losses for the electricity distribution company.

D. Prioritization and preparation of action plan:

i. The annual energy audit report submitted by accredited energy auditor in consultation with the nodal officer and periodic energy accounting report submitted by energy manager of the electricity distribution company shall include following activities, namely:

ii. data collection and verification of energy distribution:
- Monthly energy consumption data of consumers and system metering from electricity distribution company at following voltage levels:
  - 33/66/132 kV levels, including 33/66/132kV feeder and Sub-station;
  - 11/22 kV levels, including 11/22 kV feeder and Distribution Sub-station;
  - 440 V level, including Distribution Transformer and low-tension consumer;

iii. Input energy details for all metered input points;
- Boundary meter details;
- Source of energy supply (e.g., electricity from grid or self-generation), including generation from renewables.
- Review of the current consumption practices in order to identify the energy loss in the system;

iv. Data verification, validation and correction—
- A monitoring and verification protocol to quantify on annual basis the impact of each measure with respect to energy conservation and cost reduction for reporting to Bureau and the concerned State designated agency;
- Verification and correction of input energy, taking into account the following—
  - ✓ Recorded system meter reading by metering agency;
  - ✓ All the input points of transmission system;

- ✓ Details provided by the transmission unit;
- ✓ Relevant records at each electricity test division for each month;
- ✓ Recorded meter reading at all export points (where energy sent outside the State is from the distribution system); and
- ✓ System loading and corresponding infrastructure;

- Energy supplied to Open Access Consumers which is directly purchased by Open Access Consumers from any supplier other than electricity distribution company; and
- Verify and validate the system metering data provided by metering agency through random field visit (particularly for data irregularity).

3.2 PURPOSE OF AUDIT AND ACCOUNTING REPORT

Energy Accounting means accounting of all energy inflows at various voltage levels in the distribution periphery of the network, including renewable energy generation and open access consumers, and energy consumption by the end consumers. Energy accounting and a consequent annual energy audit would help to identify areas of high loss and pilferage, and thereafter focus efforts to take corrective action.

3.3 PERIOD OF ENERGY AUDITING AND ACCOUNTING

The present Annual Energy Audit and accounting is for the period FY 2022-2023 and is the second Annual Audit under BEE regulations 2021.

4. INTRODUCTION OF DISCOM

4.1 NAME AND ADDRESS OF DESIGNATED CONSUMER

Name of the Designated Consumer: TPSODL
TP Southern Odisha Distribution Limited

Address:
Corporate Office, Berhampur, Ganjam, Odisha- 760004.

4.2 NAME AND DETAILS OF ENERGY MANAGER AND AUTHORISED SIGNATORY OF DC

Table- 7 Details of Energy Manager and Authorized Signatory of DC

Details of Authorized Signatory	Details of Energy Manager
Mr. Arvind Singh CEO Email: ceo.office@tpsouthernodisha.com	Mr. Ratan Kuber Lead Engineer, Energy Manager Mobile No: 9777333245 Email: ratan.kuber@tpsouthernodisha.com

4.3 SUMMARY PROFILE OF DC

4.3.1 ASSETS

TP Southern Odisha Distribution Limited (TPSODL) is a joint venture between Tata Power and the Government of Odisha with the majority stake being held by Tata Power Company (51%). TPSODL has been carrying out the business of distribution and retail supply of electricity in the eight districts of Odisha namely Ganjam, Gajapati, Boudh, Kandhamala, Rayagada, Koraput, Nabarangpur and Malkangiri, catering to the power requirements of around 2.34 million consumers. The business of TPSODL utility is governed by the provisions of license issued by Hon'ble Odisha Electricity Regulatory Commission (OERC).

TPSODL has a vast infrastructure facility in its operating area with the following infrastructure details:

Table- 8 Infrastructure Details

Sl. No.	Particulars	As on 31st March 2023
1	Number of circles	6
2	Number of divisions	19
3	Number of sub-divisions	51
4	Number of feeders	1036
5	Number of 33/11 kV Substations	246
6	Length of 33 KV line (KM)	4046.37

Sl. No.	Particulars	As on 31st March 2023
7	Length of 11 KV line (KM)	45309.32
8	Length of Low-tension line (KM)	40216.98
9	Length of Aerial Bunched Cables	31098.41
10	Length of Underground Cables	105.85
11	Number of Distribution Transformers	58179
12	Number of PTR	553

4.3.2 ENERGY FLOW

GRIDCO and OPDCL is responsible for purchase of power and TPSODL purchases from GRIDCO and is responsible for power distribution and retail supply of electricity to its consumers. TPSODL is supplying power to consumers through its EHT, 33KV, 11kV and LT network.

Networks of 33kV and below 33kV level are maintained by TPSODL whereas higher voltage level power systems are maintained by GRIDCO and OPDCL.

The Energy flow of TPSODL is presented in the following table:

Table- 9 Energy Flow of TPSODL

Sl. No.	Energy Flow Details	Unit	Value (2022-23)
1	Input Energy Purchase (From Generation Source)	MU	4203.95
2	Net input energy (at DISCOM Periphery after adjusting the transmission losses and energy traded)	MU	4203.95
3	Total Energy billed (is the Net energy billed, adjusted for energy traded))	MU	3154.46
4	Transmission and Distribution (T&D) loss Details	MU	1049.49
		%	24.96
5	Collection Efficiency	%	98.51
6	Aggregate Technical & Commercial Loss	%	26.08

Monthly Energy purchase bills from GRIDCO are presented as Annexure-1 for the FY 2022-23. Power purchase agreement between GRIDCO and TPSODL is presented as Annexure-2.

Energy Flow Diagram of TPSODL for FY 2022-23

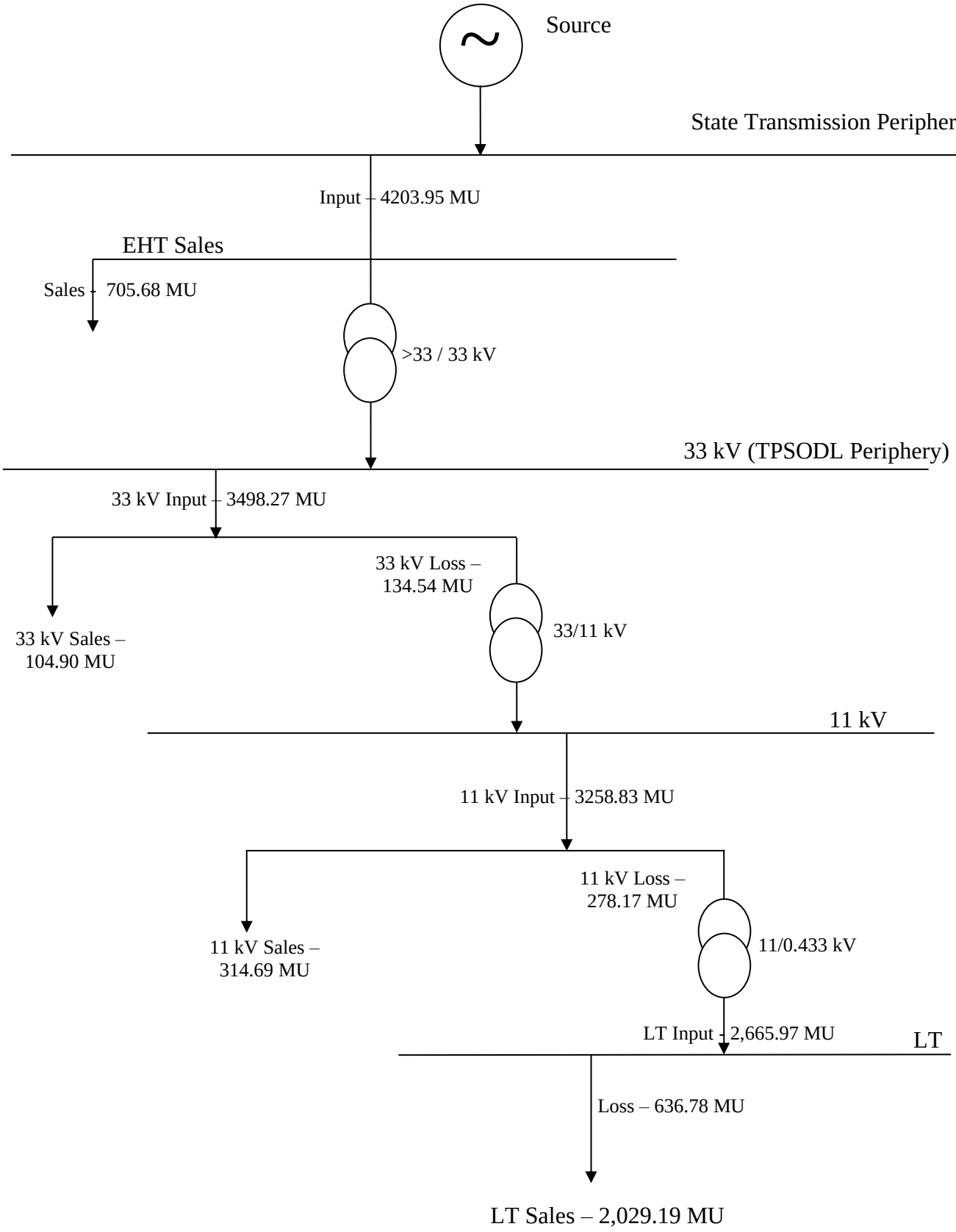

4.3.3 CONSUMER BASE

TPSODL is supplying power to 2341493 number of consumers as on 31st March 2023. The details of category wise consumers are presented in the following table:

Table- 10 Category wise Consumer Details

Category	Number of Consumers as on 31st March 2023
Residential	2172186
Agricultural	33846
Commercial/Industrial-LT	106841
Commercial/Industrial-HT	474
Others	28146
Total	**2341493**

The metering status at different voltage levels of TPSODL consumers is presented below:

Table- 11 Metering Status at different Voltage Levels

Sl. No.	Parameters	66kV and above (2022-23)	33KV (2022-23)	11/22kV (2022-23)	LT (2022-23)
1	Number of conventional metered consumers	18	124	1279	2292620
2	Number of consumers with 'smart' meters	0	0	4387	43065
3	Number of consumers with 'smart prepaid' meters	0	0	0	11121
4	Number of consumers with 'AMR' meters	0	0	0	0
5	Number of consumers with 'non-smart prepaid' meters	0	0	0	0
6	Number of unmetered consumers	0	0	0	0
	Number of total consumers	**18**	**124**	**5666**	**2335685**

4.3.4 SALIENT FEATURES

a. TPSODL is an electricity distribution company to undertake electricity distribution and retail supply business in the 8 districts of Odisha catering the power requirements of 2.34 million consumers.
b. TPSODL has been providing 24X7 power supply to all categories of consumers.
c. The DC has developed an energy accounting audit system/ software called as SARTHI 2.0 which is having the capability to create monthly, yearly energy accounting reports.

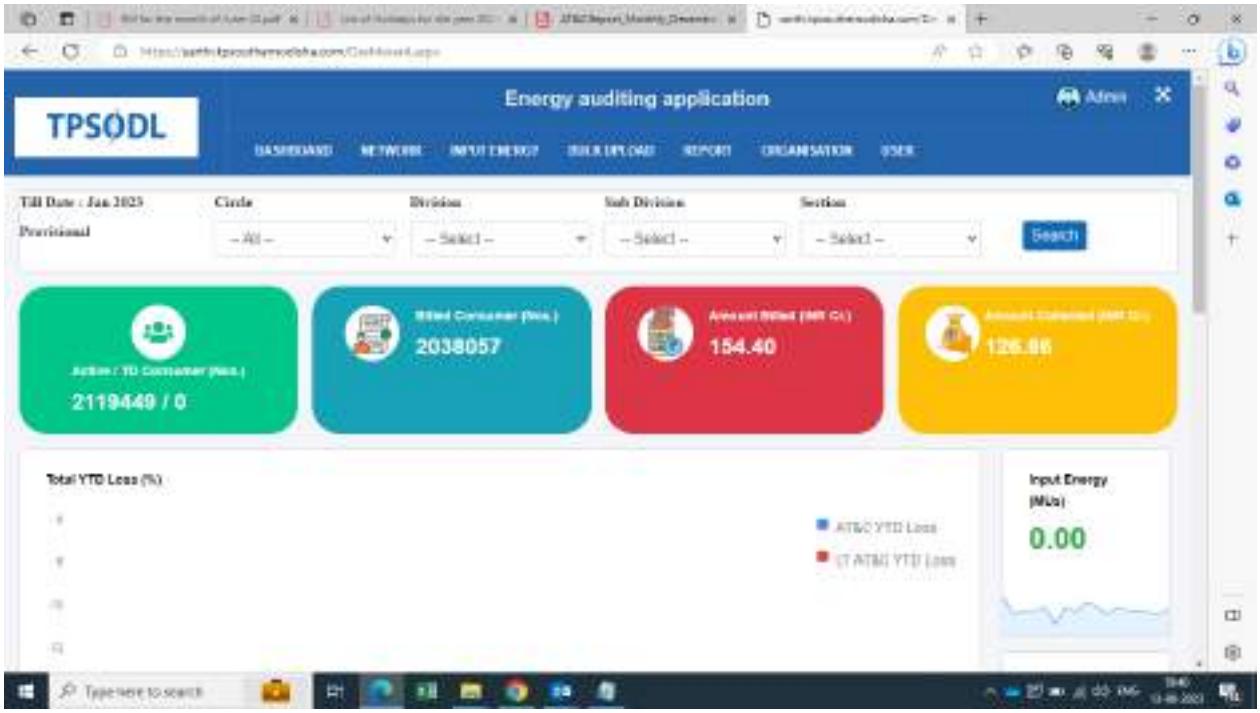

d. Integration of SARTHI 2.0 with Smart Meters /CIS is under progress and would enable automatic fetching of consumption/Sales data.
e. GIS was implemented on pilot scale in City Circle in FY 22. the GIS was extended to cover remaining 9 sections of City Circle, entire circle of Aska and Berhampur in FY 2022-23. In FY2023 24, network survey, asset mapping and consumer indexing for balance three circles namely Bhanjanagar, Rayagada and Jeypore will be undertaken.
f. Implementation of SCADA in 33/11 KV PSS:
    - 15 Nos. NON ODSSP PSS SCADA integrated.
    - 81 Nos. ODSSP PSS SCADA integrated

5. DISCUSSION AND ANALYSIS

5.1 ENERGY ACCOUNTS FOR PREVIOUS YEARS

The net energy input to the DISCOM for FY 2020-21 and FY 2021-22 is estimated and presented in the following table:

Table: Net Energy Input to TPSDOL

S.No	Parameters	Period From 2020 To 2021	Period From 2021 To 2022
1	Input Energy purchased (MU)	3599.29	3941.52
2	Transmission loss (%)	NA	NA
3	Transmission loss (MU)	0.00	0.00
4	Energy sold outside the periphery (MU)	N. A	N. A
5	Open access sale (MU)	N. A	N. A
6	EHT sale (MU)	438.43	531.00
7	Net input energy (received at DISCOM periphery or at distribution point)-(MU)	3599.29	3941.52

The technical losses and AT & C losses for FY 2020-2021 and FY 2021-22 are estimated and presented in the following table:

Table: Summary of Losses of TPSODL for FY 2020-21 and FY 2021-22

	T&D Loss		Collection Efficiency (%)	AT& C Loss (%)
	T&D Loss (MU)	T&D Loss (%)		
Total Losses (FY 2020-21)	830.36	23.06%	90.95%	30%

	T&D Loss		Collection Efficiency (%)	AT& C Loss (%)
	T&D Loss (MU)	T&D Loss (%)		
Total Losses (FY 2021-22)	942.81	23.94%	89.14%	32%

5.2 ENERGY ACCOUNTS AND PERFORMANCE OF FY 2021-22

5.2.1 DISCOM WIDE ENERGY ACCOUNTING

The net energy input to the DISCOM for FY 2022-2023 is estimated and presented in the following table:

Table- 12 Net Energy Input to TPSODL

S.No.	Parameters	Period From 2022 To 2023
1	Input Energy purchased (MU)	4203.95
2	Transmission loss (%)	NA
3	Transmission loss (MU)	0
4	Energy sold outside the periphery (MU)	0
5	Open access sale (MU)	0
6	EHT sale (MU)	705.68
7	Net input energy (received at DISCOM periphery or at distribution point)-(MU)	4203.95

The technical losses and AT & C losses for FY 2022-2023 are estimated and presented in the following table:

Table- 13 Summary of Losses of TPSODL

	T&D Loss		Collection Efficiency (%)	AT& C Loss (%)
	T&D Loss (MU)	T&D Loss (%)		
Total Losses	1049.48	24.96%	98.51%	26.08%

The total sales (metered and assessed) for various consumer categories are presented in the following table:

Table- 14 Category wise Energy Account of TPSODL

S.No	Type of Consumers	Category of Consumers (EHT/HT/LT/Others)	Voltage Level (In Voltage)	No of Consumers	Total Consumption (In MU)
1	Domestic	HT/LT	11000/400/230	2172186	1445.40
2	Commercial	HT/LT	11000/400/230	102275	313.83
3	Water Supply	HT/LT	33000/11000/400/230	5242	63.42
4	Public Lighting	LT	400/230	6712	35.95
5	HT Water Supply	HT	33000/11000	71	29.33
6	HT Industrial	EHT/HT	220000/ 132000/ 33000/ 11000/ 400	318	642.91
7	Industrial (Small)	HT/LT	11000/400	2540	11.50
8	Industrial (Medium)	HT/LT	11000/400	1948	63.76
9	HT Commercial	HT/LT	33000/11000/400	138	42.02
10	Applicable to Government Hospitals & Hospitals				
11	Lift Irrigation Schemes/Lift Irrigation Societies	HT/LT	11000/ 33000/ 400/230	32413	108.36
12	ALLIED AGRICULTURE ACTIVITIES	HT/LT	11000/ 33000/ 400/230	1433	30.94
13	ALLIED AGRO-INDUSTRIAL ACTIVITIES	HT/LT	11000/ 33000/400	81	2.74
14	RAILWAY TRACTION	EHT	220000/ 132000	12	290.44
15	SPECIFIED PUBLIC PURPOSE	HT/LT	11000/ 33000/ 400/230	16124	73.87
			Total	**2341493**	**3154.46**

5.2.2 DIVISION WISE LOSSES

The following presents the division wise T&D and AT&C losses for FY 2022-23 without Arrears.

S. No.	Name of Division	Energy parameters				Losses		Commercial Parameter			AT & C loss (%)
			Billed energy (MU)								
		Input energy (MU)	Metered energy	Unmetered/ assessment energy	Total energy	T&D loss (MU)	T&D loss (%)	Billed Amount in Rs. Crore	Collected Amount in Rs. Crore	Collection Efficiency	
1	AED-I	147.90	64.20	0.00	64.20	83.70	56.59%	32.68	33.23	101.7%	**55.9%**
2	AED-II	126.34	55.08	0.00	55.08	71.26	56.41%	28.52	26.60	93.3%	**59.3%**
3	BED-I	281.41	259.65	0.00	259.65	21.77	7.73%	155.05	162.27	104.7%	**3.4%**
4	BED-II	183.11	149.65	0.00	149.65	33.46	18.27%	84.78	88.32	104.2%	**14.9%**
5	BED-III	143.84	118.17	0.00	118.17	25.67	17.84%	66.66	70.94	106.4%	**12.6%**
6	BNED	171.36	113.56	0.00	113.56	57.79	33.73%	58.94	61.14	103.7%	**31.2%**
7	BoED	143.47	91.50	0.00	91.50	51.97	36.23%	47.58	43.10	90.6%	**42.2%**
8	GNED	721.99	599.04	0.00	599.04	122.95	17.03%	348.85	371.90	106.6%	**11.5%**
9	GED	86.92	74.51	0.00	74.51	12.41	14.28%	39.11	39.07	99.9%	**14.4%**
10	GSED	140.49	103.79	0.00	103.79	36.69	26.12%	51.96	53.94	103.8%	**23.3%**
11	HED	137.22	82.95	0.00	82.95	54.27	39.55%	44.07	46.08	104.5%	**36.8%**
12	JED	280.53	224.55	0.00	224.55	55.98	19.96%	137.01	134.03	97.8%	**21.7%**
13	KED	311.88	238.59	0.00	238.59	73.29	23.50%	150.78	140.63	93.3%	**28.6%**
14	MED	189.12	141.02	0.00	141.02	48.10	25.43%	76.62	64.00	83.5%	**37.7%**
15	NED	342.42	230.37	0.00	230.37	112.04	32.72%	116.68	81.38	69.7%	**53.1%**
16	PED	151.59	106.33	0.00	106.33	45.26	29.86%	57.49	56.02	97.4%	**31.6%**
17	PKED	147.60	120.68	0.00	120.68	26.92	18.24%	65.80	62.70	95.3%	**22.1%**
18	PSED	170.25	95.19	0.00	95.19	75.06	44.09%	48.46	48.17	99.4%	**44.4%**
19	RED	326.52	285.64	0.00	285.64	40.89	12.52%	185.16	185.87	100.4%	**12.2%**
Total		**4203.94**	**3154.46**	**0.00**	**3154.46**	**1049.49**	**24.96%**	**1796.18**	**1769.38**	**98.51%**	**26.08%**

5.2.3 VOLTAGE WISE INPUT AND LOSSES

DC has provided energy input and sales/ consumption for various voltages of supply and the estimated losses are presented in the following table:

Table- 15Voltage wise Input, Sale and Loss

S. No	Voltage	Input			Output			Loss (MU)	Loss (%)
		Input from higher voltage	Injection at voltage level	Total input	Sales (Including wheeling to DOA)	Input to lower voltage	Total		
1	> 33 kV	705.68		705.68	705.68		705.68	0.00	0.00%
2	33 kV	3498.27		3498.27	104.90	3258.83	3363.72	134.54	3.85%
3	11 kV	3258.83		3258.83	314.69	2665.97	2980.65	278.17	8.54%
4	LT	2,665.97		2665.97	2,029.19		2029.19	636.78	23.89%

5.3 ENERGY CONSERVATION MEASURES ALREADY TAKEN AND PROPOSED FOR FUTURE

5.3.1 CAPEX program for FY 2022-23 by TPSODL:

S. No.	Voltage Level	Activity Under CAPEX FY 23 for Loss Reduction	UOM	QTY CAPEX FY 23	Benefits
1	33KV	33KV new lines for connectivity with new GSS	CKM	22	To reduce distance of 33kV lines connectivity from Source GSS
2		Network Upgradation of 33 KV Line	CKM	186	To reduce overloading and to build future capacity
3		Augmentation/ Replacement of Old of PTR	Nos	10	To reduce overloading and to build future capacity
4	11KV	Network Upgradation of 11 KV Line	CKM	79	To reduce overloading and to build future capacity
5		New 11 KV line	CKM	47	To reduce distance of 11KV lines connectivity from Source PSS
6		Augmentation of DTR	Nos	122	To reduce overloading and to build future capacity

S. No.	Voltage Level	Activity Under CAPEX FY 23 for Loss Reduction	UOM	QTY CAPEX FY 23	Benefits
7	LT	LT Bare to ABC Conversion	CKM	28	To reduce illegal hooking of the lines in theft prone areas
8		Augmentation of LT ABC line	CKM	5	To reduce overloading and to build future capacity
9	Others	GIS implementation in Circle	Nos	2	Considering the importance of Geographical Information System to have better asset management and to strengthen various other business processes viz. energy audit, technical feasibility, dues verification, network planning and developing Outage Management System
10		Feeder Meter for Energy Audit	Nos	115	To generate accurate energy audit reports to get specific insights about the distribution network to identify areas of high loses and theft and enable corrective action (as required).

5.3.2 CAPEX program proposed for FY 2023-24 by TPSODL:

CAPEX investment plan for 2023-24:

S. No.	Activity Under CAPEX FY 23 for Loss Reduction	UOM	COST CAPEX FY 24	Benefits
1	Feeder Meter for Energy Audit	Cr.	39.71	a. To help develop comprehensive energy accounting system to quantify and determine actual losses in the power distribution system, segregated across technical and commercial losses. b. Identify areas of leakage, theft, wastage or inefficient use, thereby further helping to reduce high Transmission and Distribution (T&D) losses. c. To enable TPSODL to undertake targeted efficiency improvement activities to reduce T&D losses in target areas / customer segments.
2	LT Bare to LT ABC Conversion	Cr.	18.98	a. Reliable Power supply to the Consumers since bare conductor will get converted into insulated cable. b. Comparatively safer than the LT Bare conductor and eliminate the element of risk if one comes in close proximity. c. Simpler installation, as crossbars and insulators are not required. d. Suitable for congested lanes as well. e. Electricity theft will be difficult as hooking would not be possible. f. Less required maintenance and necessary inspections of lines.
3	GIS Implementation	Cr.	38.32	a. GIS system will help to serve customer for better resolution of complaints b. GIS system ensures proper asset management. c. GIS System will strengthen various other business processes viz. energy audit process, technical feasibility, arrear recovery, network planning, enforcement activities and outage management. d. GIS will be the backbone for implementation of outage management system in coming years. e. GIS System will enable mapping of all the assets & customers, enables quick services in case of breakdown of network. • GIS applications will aid in collection, monitoring and management and consequently reduce the commercial losses

5.3.3 DSM program taken by TPSODL for FY 2022-23:

TPSODL have been distributed 20,000 LED bulbs (9W) during awareness camps at village, GP and Block level to promote energy conservation and sustainable habits among consumers, which is equal to 1.2 MU electricity saved. Consumers were also sensitized on effective energy use, electrical safety etc. more than 500 GPs have been covered. The payback calculations for this DSM program is presented in the below table:

Table: LED Bulbs Replacement for FY 2022-23

S.No	Parameter	UoM	LED Bulbs 9 W
1	Nos of Lights replaced	Nos.	20,000.00
2	Wattage of Existing incandescent bulbs	Watt	60.00
3	Wattage of LED bulbs	Watt	9.00
4	Baseline load	MW	1.20
5	Projected load after DSM	MW	0.18
6	Reduction in Demand due to LED Bulbs Program	MW	1.02
7	Operating hours/day	hrs/day	6.00
8	Annual Operating days	days	365.00
9	Annual Operating hours	Hrs/Yr	2,190.00
10	Annual Energy Savings	MWh/Yr	2,233.80
		MU/Yr	2.23
11	Unit Cost	Rs. / kWh	5.70
12	Annual Cost savings	Rs. Cr/ year	1.27
13	Investment (Tentative)	Rs. Cr.	0.20
14	Payback Period	Months	1.88
		Years	0.16

Photographs of DSM program:

5.4 CRITICAL ANALYSIS BY ENERGY AUDITOR

5.4.1 STATUS OF COMPLIANCE TO BEE REGULATIONS

The status and progress in compliance to prerequisites to energy accounting and Management Analysis as per the Regulations is presented below:

Table- 16 Status of Compliance to BEE Regulation

Clause No	Clause Details	Sub Clause Number	Subclause Details	Present Status
3	Intervals of time for conduct of annual energy audit	a	Conducted an annual energy audit for every financial year and submitted the annual energy audit report to the Bureau and respective State Designated Agency and also made available on the website of the electricity distribution company within a period of four months from the expiry of the relevant financial year	Annual energy audit for FY2020-2021, FY 2021-2022, was conducted and reports was submitted.
4	Intervals of time for conduct of periodic energy accounting.	a	All feeder wise, circle wise and division wise periodic energy accounting is conducted by the energy manager of the electricity distribution company for each quarter of the financial year.	Periodic energy accounting reports for Q1, Q2, Q3 and Q4 for FY22-23 have been prepared by the DC and submitted to BEE, SDA and as per the BEE regulation and also posted the details on the TPSODL website.
		b	Submitted the periodic energy accounting report to the Bureau and respective State Designated Agency and also made available on the website of electricity distribution company within forty-five days from the date of the periodic energy accounting.	Periodic energy accounting reports for Q1, Q2, Q3 and Q4 for FY22-23 have been prepared by the DC and submitted to BEE, SDA and as per the BEE regulation and also posted the details on the TPSODL website.

Clause No	Clause Details	Sub Clause Number	Subclause Details	Present Status
		c	Electricity distribution company conducted its first periodic energy accounting, for the last quarter of the financial year immediately preceding the date of such commencement (i.e., 6th October 2021).	Periodic energy accounting reports for Q1, Q2, Q3 and Q4 for FY22-23 have been prepared by the DC and submitted to BEE, SDA and as per the BEE regulation and also posted the details on the TPSODL website.
		d	Electricity distribution company conducted its subsequent periodic energy accounting for each quarter of the financial year for a period of two financial years from the date of such commencement, and submit the periodic energy accounting report within sixty days from the date of periodic energy accounting.	Periodic energy accounting reports for Q1, Q2, Q3 and Q4 for FY22-23 have been prepared by the DC and submitted to BEE, SDA and as per the BEE regulation and also posted the details on the TPSODL website.
5	Pre-requisites for annual energy audit and periodic energy accounting	a	Identification and mapping of all of the electrical network assets	All the electrical assets are mapped into TPSODL Dashboard. Billing data is stored in CBS (Centralized Billing System) software.
		b	Identification and mapping of high tension and low-tension consumers	Mapping of EHT/HT/LT consumers with Section, Division and Sub-Division are mapped in fluent grid Portal / CIS (Consumer information system).
		c	Development and implementation of information technology enabled energy accounting and audit system, including associated software	DC has portal for Energy Audit in which circle level data is uploaded. The uploaded data includes input energy, session wise sales, session wise billed amount and collected amount.

Clause No	Clause Details	Sub Clause Number	Subclause Details	Present Status
	Pre-requisites for annual energy audit and periodic energy accounting	d	Electricity distribution company ensures the installation of functional meters for all consumers, transformers and feeders. Meter installation is done in a phased manner within a period of three financial years from the date of the commencement of these regulations in accordance with the trajectory set out in the First Schedule	All consumers including agricultural consumers are metered. DC has already installed smart meters for all government consumers. DC has started installing smart meters for DTRs. 16000 smart meters will be installed with smart meter on DTRs capacity above 25KVA by Dec 2023 and rest by March 2025 DC has informed that 719 Nos of 11KV feeders out of 906 Nos are installed with Communicable meters with AMR and remaining feeder will be installed with Communicable meter by Sept 2023
			d.1. 100% Communicable Feeder Metering integrated with AMI, by 31st December 2022 along with replacement of existing non-communicable feeder meters.	DC has informed that 713 Nos of 11KV feeders out of 906 Nos are installed with Communicable meters with AMR and remaining feeder will be installed with Communicable meter with AMI by Sept 2023

Clause No	Clause Details	Sub Clause Number	Subclause Details	Present Status
5		d	d.2. All **Distribution Transformers** (other than HVDS DT up to 25kVA and other DTs below 25 kVA) shall be metered with communicable meters. Communicable DT Metering for the following areas/ consumers to be completed by March 2023 and in balance areas by December 2023: d.2.1. All Electricity Divisions of 500 AMRUT cities, with AT&C Losses > 15% d.2.2. All Union Territories (for areas with technical difficulty, non-communicable meters may be installed) d.2.3. All Industrial and Commercial consumers d.2.4. All Government offices at Block level and above d.2.5. Other high loss areas i.e., rural areas with losses more than 25% and urban areas with losses more than 15%	d.2.1. Not Relevant for DC. d.2.2. Not Relevant for DC. d.2.3. DC will install communicable meters with AMI for DTRs of **commercial and industrial consumers by the end of December 2023.** d.2.4. DC will install communicable meters with AMI for DTRs of Government **offices at Block level (Mandal) and above by the end of December 2023.** d.2.5. DC will install communicable meters with AMI for DTRs of other **high loss areas** i.e., rural areas with losses more than 25% and urban areas with losses more than 15% by the end of Dec 2023.

Clause No	Clause Details	Sub Clause Number	Subclause Details	Present Status
	Pre-requisites for annual energy audit and periodic energy accounting		d.3. **Prepaid Smart Consumer Metering** to be completed for all directly connected meters and AMR in case of other meters, by December 2025 in the following areas: d.3.1. All Electricity Divisions of 500 AMRUT cities, with AT&C Losses > 15%; d.3.2. All Union Territories (for areas with technical difficulty, prepaid meters to be installed); d.3.3. All Industrial and Commercial consumers; d.3.4. All Government offices at Block level and above; d.3.5. Other high loss areas i.e., rural areas with losses more than 25% and urban areas with losses more than 15%.	d.3.1. Not applicable d.3.2. Not applicable d.3.3. Smart meters installed for industrial and commercial consumers has option for prepaid facility. d.3.4. have been provided with prepaid facility. d.3.5. DC has informed that prepaid meters for consumers in high loss area with losses more than 25% and urban area with losses more than 15% will be installed by December 2025
			d.4. Consumer Metering: 98% by FY 2022-23 99% by FY 2023-24	All consumers are metered.

Clause No	Clause Details	Sub Clause Number	Subclause Details	Present Status
			d.5. Targets for functional meters— Meter FY 22-23 FY 23-24 FY24-25 Feeder metering 98.5% 99.5% 99.5% DT metering 90% 95% 98% Consumer metering 93% 96% 98	Out of total 906Nos of 11kV feeders, 713 numbers of feeders are metered out of that 596(80%) are functional DC has already installed smart meters for all government consumers. DC has started installing smart meters for DTRs. 16000 smart meters will be installed with smart meter on DTRs capacity above 25KVA by Dec 2023 and rest by March 2025. 97.6% of consumer meters are functional as on 31 March 2023.
5	Pre-requisites for annual energy audit and periodic energy accounting	e	e.1. All distribution transformers (other than high voltage distribution system up to 25kVA and other distribution system below 25 kVA) is metered with communicable meters and existing non communicable distribution transformer meters is replaced with communicable meters and integrated with advanced metering infrastructure.	DC has already installed smart meters for all government consumers. DC has started installing smart meters for DTRs. 16000 smart meters will be installed with smart meter on DTRs capacity above 25KVA by Dec 2023 and rest by March 2025

Clause No	Clause Details	Sub Clause Number	Subclause Details	Present Status
		f	Electricity distribution company has established an information technology enabled system to create energy accounting reports without any manual interference and such systems may be within a period of three years from the date of the commencement of these regulations in case of urban and priority area consumers; and within five years from the date of the commencement of these regulations in case of rural consumers	DC has portal for Energy Audit in which circle level data is uploaded. The uploaded data includes input energy, session wise sales, session wise billed amount and collected amount.
		g	Electricity distribution company has a centralized energy accounting and audit cell comprising of— (i) a nodal officer, an energy manager and an information technology manager, having professional experience of not less than five years; and (ii) a financial manager having professional experience of not less than five years	The DC has energy audit cell with the following staff 1. A Nodal officer- Head Energy Audit 2. Designated energy manager who is a qualified energy auditor- Lead engineer. 3. A qualified information technology manager- Head of Group (IT) 4. A qualified financial manager- Financial Controller.

Clause No	Clause Details	Sub Clause Number	Subclause Details	Present Status
6	Reporting requirements for annual energy audit and periodic energy accounting	a	Electricity distribution company has a nodal officer, who is a full-time employee of the electricity distribution company in the rank of the Chief Engineer or above, for the purpose of reporting of the annual energy audit and periodic energy accounting and communicate the same to the Bureau.	Chief Commercial Officer is the Nodal officer, who is a full-time employee of the electricity distribution company in the rank of the Chief Engineer or above, for the purpose of reporting of the annual energy audit and periodic energy accounting and communicate the same to the Bureau.
		b	Electricity distribution company ensures that the energy accounting data is generated from a metering system or till such time the metering system is not in place, by an agreed method of assumption as may be prescribed by the State Commission	All the consumption is based on metered data and all consumer categories are metered.
	Reporting requirements for annual energy audit and periodic energy accounting	c	Metering of distribution transformers at High Voltage Distribution System up to 25KVA is done on cluster meter installed by the electricity distribution company	Individual consumers are metered and hence cluster metering is not required.
		d	The energy accounting and audit system and software is developed to create monthly, quarterly and yearly energy accounting reports.	The DC has developed an energy accounting and audit system and software which is having the capability to create monthly, yearly energy accounting reports (SARATHI 2.0).

Clause No	Clause Details	Sub Clause Number	Subclause Details	Present Status
6		e	Electricity distribution company has provided the details of the information technology system in place as specified in clause (f) of regulation 5 that ensures minimal manual intervention in creating the energy accounting reports and any manual intervention of any nature, in respect of the period specified therein, shall be clearly indicated in the periodic energy accounting report	DC has portal for Energy Audit in which circle level data is uploaded. The uploaded data includes input energy, session wise sales, session wise billed amount and collected amount.

5.4.2 11KV FEEDER METERING AND ENERGY AUDIT

Out of total 906 11 kV feeders 713 no. of 11 kV feeders are communicable meters with AMR. Due to mapping issue DC has provided meter readings data converted from meter dumps for only 93 no. of 11 kV feeders. The sample 11 kV feeder wise energy audit is presented as **Annexure-3.**

5.4.3 DTR METERING AND ENERGY AUDIT

DC has already installed smart meters for all government consumers. DC has started installing smart meters for DTRs. 16000 smart meters will be installed with smart meter on DTRs capacity above 25KVA by Dec 2023 of which 1088 Nos DTRs are metered and rest by March 2025.

5.4.4 CATEGORY WISE SUBSIDY FOR FY 2022-23

DC does not receive any tariff subsidy from the government.

5.4.5 ANALYSIS ON T&D LOSS AND AT&C LOSS

- **% Losses – Aggregate**:

The overall Technical Loss (T&D Loss) is 24.96% and overall AT&C Loss is 26.08% for FY 2022-2023. This reflects an overall collection efficiency of 98.51%.

- **% Losses –Voltage Wise**:

The overall losses for LT voltage level are 23.89%, 11kV voltage level is 8.54% and 33kV level is 3.85% for FY 2022-2023.

- **% Losses –Division wise**:

The range of T&D losses, collection efficiency and AT&C losses among the divisions is tabulated below:

Table- 17Range of Technical and AT&C losses

Description	Data
T&D loss	24.96%
T&D loss Range	7.73% to 56.96%
Division With highest T&D loss	AED-I
Division With lowest T&D loss	BED-I

Description	Data
Collection Efficiency	98.51%
Collection Efficiency Range	69.75% to 106.61%
Division With highest Collection Efficiency	GNED
Division With lowest Collection Efficiency	NED
AT & C loss (%)	26.08%
AT & C loss Range	3.44% to 59.34%
Division With highest AT&C loss	AED-II
Division With lowest AT&C loss	BED-I

The following divisions of the DISCOM are having T&D losses more than the average value and requires special attention

Table- 18 Divisions with High T&D loss

S No	Average T&D Loss	Divisions with More than Average T&D loss	T&D Loss %
1	24.96%	MED	25.43%
2		GSED	26.12%
3		PED	29.86%
4		NED	32.72%
5		BNED	33.73%
6		BoED	36.23%
7		HED	39.55%
8		PSED	44.09%
9		AED-II	56.41%
10		AED-I	56.59%

The following divisions of the DISCOM are having Collection Efficiency less than the average value and require special attention:

Table- 19 Divisions with Collection Efficiency less than Average Collection efficiency

S No	Average Collection Efficiency	Divisions with Less than Average Collection Efficiency	Collection Efficiency %
1	98.51%	NED	69.75%
2		MED	83.53%
3		BoED	90.60%
4		AED-II	93.27%

S No	Average Collection Efficiency	Divisions with Less than Average Collection Efficiency	Collection Efficiency %
5		KED	93.27%
6		PKED	95.29%
7		PED	97.45%
8		JED	97.83%

- **Category wise Losses**:

  Category wise input energy cannot be estimated on account of mixed feeders. Accordingly, T&D Losses and AT&C Losses for consumer categories could not be provided. However, collection efficiencies of various consumer categories are tabulated below:

Table- 20 Category wise Collection Efficiency

Sl. No.	Category	Collection Efficiency
1	Residential	84.71%
2	Agricultural	67.92%
3	Commercial/Industrial-LT	111.08%
4	Commercial/Industrial-HT	106.12%
5	Others	107.45%
Overall		**98.51%**

5.5 INCLUSION AND EXCLUSIONS

- EHT sales are included in the estimation of losses.
- DC does not receive any tariff subsidy from the government.

6. NOTES OF THE EA/EM ALONG WITH QUERIES AND REPLIES TO DATA GAPS

6.1 Query by EA, response by EM and Notes by EA

Table- 21Query EA by and response by EM

Sl. No	Query by EA	Response by EM of DISCOM	Notes by EA
1	Why 11 kV feeder data is not provided in the feeder-wise data sheet, although 713 no. of feeders are installed with communication meters.	AMR are installed but maximum no of AMR for non-functional currently. Due to this reason and new notification, TPSODL has already planned to installed Smart Meters in all 11KV by Sept 2023. GIS has started consumer mapping of 11kV to consumer which we have completed for 3 Circle and rest by March 2024.	Noted
2	DT wise data is not provided in Pro-forma.	GIS has started consumer mapping of DTR to consumer which will be completed by March 2024. TPSODL has started installing smart meters for DTRs. 16000 smart meters will be installed with smart meter on DTRs capacity above 25KVA by Dec 2023 and rest by March 2025	Noted

7. ANNEXURES

7.1 INTRODUCTION OF VERIFICATION FIRM:

East Coast Sustainable Pvt Limited is registered as an Empaneled Accredited Energy Auditing Firm with Bureau of Energy Efficiency (BEE) bearing Registration No. EmAEA –067

East Coast Sustainable Private Limited (East Coast) was founded by highly qualified and experienced technocrats, who have a deep understanding of energy efficiency, renewable energy, environment conservation and climate change. The team has experience of conducting more than 700 projects in these areas for various sectors of the economy. Complete range of services being undertaken by East Coast Sustainable includes the following.

- Energy Efficiency
- Perform, Achieve and Trade (PAT) Scheme
- Renewable Energy
- Environmental Management
- Development of International Standards Organization (ISO) Management System
- Safety Audits
- Water Audit and Water Balance
- Project Management
- Demand Side Management (DSM)
- Sustainability Reporting.

7.2 MINUTES OF MEETING WITH THE DISCOM TEAM

The Annual Energy Audit team from East Coast Sustainable Private Limited, Visakhapatnam visited TPSODL, on 3rd – 4th July 2023 and introduced the audit team and explained the purpose to the DISCOM personnel. The team checked supporting documents and entered the data in the pro-forma. The Annual Energy Audit is completed on 4thJuly 2023 and the Audit Proceedings was signed by both parties (DC and EmAEA). The Audit proceedings / minutes are placed at **Annexure -4.**

7.3 CHECK LIST PREPARED BY AUDITING FIRM

The check list prepared for Annual Energy Audit is presented in the following table:

1	Monthly energy consumption data of consumers and system metering from electricity distribution company at different voltage levels
2	Input energy details for all metered input points
3	Boundary meter details
4	Source of energy supply (e.g., electricity from grid or self-generation), including generation from renewable.
5	Review of the current consumption practices
6	Monitoring and verification protocol to quantify on annual basis the impact of each measure with respect to energy conservation and cost reduction for reporting to Bureau and the concerned State designated agency
7	Verification and correction of input energy
8	System loading and corresponding infrastructure
9	Energy supplied to Open Access Consumers
10	Verify and validate the system metering data through a random field visit

7.4 BRIEF APPROACH, SCOPE & METHODOLOGY FOR AUDIT

The methodology adopted for conducting the Annual Energy Audit is as follows

- Verification of existing pattern of energy distribution across periphery of electricity distribution company
- Verification of accounted energy flow submitted by electricity distribution company at all applicable voltage levels of the distribution network
- Collection of data on energy received, and distributed, covered within the scope of energy audit
- Analyse the consistency of data monitoring compared to the collected data
- Recommendations to facilitate energy accounting and improve energy efficiency
- Analyse the data with respect to the purpose of energy accounting in reducing losses for the electricity distribution company

7.5 INFRASTRUCTURE DETAILS

TPSODL has a vast infrastructure facility in its operating area with the following infrastructure details:

Sl. No.	Particulars	As on 31st March 2023
1	Number of Circles	6
2	Number of Divisions	19
3	Number of Sub-Divisions	51
4	Number of Feeders	1036
5	Number of 33/11 kV Substations	246
6	Length of 33 KV line (KM)	4046.37
7	Length of 11 KV line (KM)	45309.32
8	Length of Low-tension line (KM)	40216.98
9	Length of Aerial Bunched Cables	31098.41
10	Length of Underground Cables	105.85
11	Number of Distribution Transformers	58179
12	Number of PTR	553

7.6 ELECTRICAL DISTRIBUTION SYSTEM

TPSODL receives electrical power at 33kV level from 35 numbers of transmission stations (TS) out of which 5 nos. TS are rated at 220/132/33kV, 5 nos. at 220/33kV and 25 nos. at 132/33kV located within and in the vicinity of TPSODL operational area. TPSODL distributes the power at 33kV / 11kV / 440V / 230V depending on the demand of the consumers.

7.7 POWER PURCHASE DETAILS

GRIDCO and OPDCL is responsible for purchase of power and TPSODL purchases from GRIDCO and is responsible for power distribution and retail supply of electricity to its consumers. TPSODL is supplying power to consumers through its EHT, 33KV, 11kV and LT network.

Networks of 33kV and below 33kV level are maintained by TPSODL whereas higher voltage level power systems are maintained by GRIDCO and OPDCL.

Monthly Energy purchase bills from GRIDCO are presented as **Annexure-1** for the FY 2022-23. Power purchase agreement between GRIDCO and TPSODL is presented as **Annexure-2.**

7.8 LINE DIAGRAM (SLD)

Geographical Map of TPSODL is presented below:

The NOC of all divisions of TPSODL are presented as **Annexure – 5.**

7.9 CATEGORY OF SERVICE DETAILS (WITH CONSUMER AND VOLTAGE - WISE)

TPSODL is supplying power to 2341493 number of consumers as on 31st March 2023. The details of category wise consumers are presented in the following table:

Category	Number of Consumers as on 31st March 2023
Residential	2172186
Agricultural	33846
Commercial/Industrial-LT	106841
Commercial/Industrial-HT	474
Others	28146
Total	**2341493**

Voltage-Wise Consumers

Voltage level	Number of Consumers as on 31st March 2023
LT	2335685
11KV	5666
33KV	124
132KV	18
Total	**2341493**

7.10 LIST OF DOCUMENTS VERIFIED WITH EACH PARAMETER:

The following are the documents verified during Annual Energy Audit:

S. No	Parameter	Supporting Document
1	Input Energy	a. Monthly Power purchase bills from GRIDCO for FY 2022-23
2	Billed Energy	a. Division wise Monthly Energy from CIsS data base. b. Consumer Profile

7.11 BRIEF DESCRIPTION OF UNIT

TP Southern Odisha Distribution Limited (TPSODL) is a joint venture between Tata Power and the Government of Odisha with the majority stake being held by Tata Power Company (51%).

TPSODL has been carrying out the business of distribution and retail supply of electricity in the eight districts of Odisha namely Ganjam, Gajapati, Boudh, Kandhamala, Rayagada, Koraput, Nabarangpur and Malkangiri over an area of supply 48,751 sq km. TPSODL serves a population of 94.38 lacs with a Customer Base of 23.41 lacs. The Company is operating through 6 circles namely City Circle, Berhampur Circle, Aska Circle, Bhanjanagar Circle, Rayagada Circle and Jeypore Circle which is further subdivided in 19 Divisions and 51 Sub-division which manages the commercial and O&M activities in order to serve its consumers. The business of TPSODL utility is governed by the provisions of license issued by Hon'ble Odisha Electricity Regulatory Commission (OERC).

7.12 LIST OF PARAMETERS ARRIVED THROUGH CALCULATION OR FORMULAE WITH LIST OF DOCUMENTS AS SOURCE OF DATA

Calculation of % T&D Loss

The %T&D Loss of the DISCOM is calculated, taking EHT sales into consideration & excluding Open Access Energy. The % T&D Loss of the DISCOM is arrived at as per the following formula:

% T&D Loss = (Input Energy (MU) – Billed Energy (MU)) / Input Energy (MU)*100

Calculation of % AT&C Loss

The **% AT&C** Loss of the DISCOM is calculated, including subsidies in both billed amount and collected amount. The **% AT&C** Loss of the DISCOM is arrived at as per the following formula.

% AT&C Loss = (1-(Billing Efficiency X Collection Efficiency)) X 100

8. FORMATS

8.1 GENERAL INFORMATION

Included in the pro-forma

8.2 PERFORMANCE SUMMARY OF ELECTRICITY DISTRIBUTION COMPANY

Included in the pro-forma

8.3 DETAILS OF INPUT INFRASTRUCTURE

Included in the pro-forma with all the available data

Voltage-wise losses

S. No	Voltage	Input			Output			Loss (MU)	Loss (%)
		Input from higher voltage	Injection at voltage level	Total input	Sales (Including wheeling to DOA)	Input to lower voltage	Total		
1	> 33 kV	705.68		705.68	705.68		705.68	0.00	0.00%
2	33 kV	3498.27		3498.27	104.90	3258.83	3363.72	134.54	3.85%
3	11 kV	3258.83		3258.83	314.69	2665.97	2980.65	278.17	8.54%
4	LT	2,665.97		2665.97	2,029.19		2029.19	636.78	23.89%

8.4 INPUT ENERGY: A. SUMMARY OF ENERGY INPUT AND INFRASTRUCTURE

Included in the pro-forma

INPUT ENERGY: B. METER READING OF INPUT ENERGY AT INJECTION POINTS,

Included in the pro-forma

8.5 DETAILS OF INPUT ENERGY SOURCES

Included in the pro-forma

8.6 DIVISION-WISE LOSSES

Included in the pro-forma

8.7 DETAILS OF FEEDER-WISE LOSSES

Details are updated in the Pro-forma.

8.8 DETAILS OF SUBSIDY CLAIMED AND RECEIVED

DC does not receive any tariff subsidy from the government.

8.9 DETAILS OF DT METERING

DC has already installed smart meters for all government consumers. DC has started installing smart meters for DTRs. 16000 smart meters will be installed with smart meter on DTRs capacity above 25KVA by Dec 2023 of which 1088 Nos DTRs are metered and rest by March 2025.
Details of DT metering will be provided after completion of DT metering.

8.10 DT WISE LOSSES TO THE EXTENT DT METERS ARE EXISTING

DC has already installed smart meters for all government consumers. DC has started installing smart meters for DTRs. 16000 smart meters will be installed with smart meter on DTRs capacity above 25KVA by Dec 2023 of which 1088 Nos DTRs are metered and rest by March 2025.
Details of DT metering will be provided after completion of DT metering.

9. FIELD VERIFICATION DATA AS PER S.O.P

9.1 FIELD VISITS:

Visit to Sasan Ambagaon Substation:

Observations:

- Sasan Ambagaon 33/ 11 kV substation has capacity of 2x5 MVA.
- There is a 33 kV feeder from Purushottampur GSS which is located 20 km away from the Sasan Ambagaon Sub-Station.
- There are 2 Nos 11 kV outgoing feeders with smart communicable meters.
- The meter at 33 kV Feeder and 11 kV feeders are working properly.
- The log books are maintained in the PSS & proper safety protocols are followed.

Photographs of Sasan Ambagaon 33/11 kV Sub-Station:

33 kV I/C feeder from Purushottampur GSS

11 kV feeder with smart communicable meter

Visit to 132/ 33 kV Grid Sub-station, Brahmapur:

T to D interface meter for 3 transformers at Brahmapur GSS

TPSODL smart meter testing and training center

Consumer Smart Meter

9.2 FIELD VERIFICATION DATA ON SAMPLE BASIS AS PER SOP:

- **11 kV Feeder meter data:**

  Meter dumps data is provided as **Annexure – 3** for 93 number of feeders.

- **Input energy metering points between Transmission and distribution feeders:**

  Sample size of input energy data of T<>D interface meters is provided on monthly basis as an **Annexure – 6**.

- **DTR metering data:**

  Sample size of DTR meters dumps data is provided as **Annexure – 7.**

- **Foot survey of feeder data:**

  DC has a team to do such foot survey activities to find out the theft cases on daily basis. They are maintaining the foot survey data on circle-wise and they are collecting the amount form the consumers. Foot survey data for all the 6 circles with collected amount data is provided as **Annexure – 8.**

- **Verification of metering and connection status:**

  Sample size of verified metering and connection status of the agriculture (Metered and Un-metered), Govt. category connection (ULB, RLB etc.), and LT Industrial category consumers are provided as **Annexure – 9.**

ANNEXURE – 1

(BSP Bills From April 2022 to March 2023)

GRIDCO LIMITED

(A Govt. of Odisha Undertaking)
(Formerly Grid Corporation of Orissa Limited)
Regd. Office: Janpath, Bhubaneswar-751022
Ph:0674-2541320/2540098/2540877 Fax:0674-2541904 E-mail:sgm.pp@gridco.co.in
CIN: U40109OR1995SGC003960

Ref. No.: CGM-PP-50/2022/ 461(9) Date: 06-05-2022

To

The Chief Executive Officer,
TP Southern Odisha Distribution Limited
Courtpeta, Berhampur.

Sub: Energy Bill for the Month of Apr-2022

Dear Sir,

Enclosed please find herewith the Revised Bulk supply energy bill for the month of Apr-2022 for Rs.86,27,99,569.00 towards supply of power by GRIDCO to TPSODL.

You are requested to kindly release the payment at the earliest. The rebate for prompt payment shall be admissible as per tariff order. The Energy Flow Statement, furnished by SLDC, based on which the bill is prepared are enclosed herewith for your reference.

Thanking You.

Encl: As stated above.

Yours faithfully,

6/5/22

Sr.GM (T&BS)

Copy to:

Nodal Officer, DISCOM Monitoring Unit (DMU), GRIDCO, Bhubaneswar
Chief Load Despatcher, SLDC, Mancheswar, Bhubaneswar.
CGM (CF)/CFO, GRIDCO, Bhubaneswar.
DGM (F) PP Branch, GRIDCO, Bhubaneswar.
DGM (L & RA), GRIDCO, Bhubaneswar
Manager, Union Bank of India, Main Branch, Bhubaneswar
GUARD File

G R I D C O Limited
Registered Office: Janpath
Bhubaneswar 751022
CIN: U40109OR1995SGC003960

Bill of Supply

For TPSODL
April-2022

GRIDCO GSTIN:21AABCG5398P1Z3
Goods Description: Electricity
HSN Code: 27160000
Ref No: GR/BS/22-23/ 036

Date: 06-May-22
Pay By Date: 05-Jun-22

The Chief Executive Officer
TP Southern Odisha Distribution Limited
Courtpeta, Berhampur, Odisha
GSTIN: 21AAICT3235P1Z1

A. Total Energy for the month	380.087916 MU
B. SMD approved by OERC	7,20,000 kVA
SMD permitted by OERC	7,92,000 kVA
Actual SMD occurred	6,68,489 kVA
Excess SMD drawal	0 kVA

Item No			Amount (Rs.)
1	**Current Charges**		
	(a) Bulk Supply Price @ 227 Paise per kWh for the Energy	86,27,99,569.00	
	(b) Excess Demand Charge @ Rs 250 per kVA	0.00	
	Sub Total: (a+b)		86,27,99,569.00
2	**Debit/Credit Bills:**		
	Debit/Credit Bill for the month of _____ vide Bill No. _____ Dtd_____	0.00	
	Sub Total:		0.00
3	**Total Current Charges: Items (1+2)**		86,27,99,569.00
4	**Add Late Payment Surcharge for the month of Apr-2022 (Annex-6)**		-
5	**Add: Previous amount outstanding :-**		
	(i) Outstanding energy charges	1,35,71,95,188.00	
	(ii) Outstanding LPS	-	
	Total Previous Outstanding: (i+ii)		1,35,71,95,188.00
6	**Less payment received during the month**		
	(a) Collection for Feb '22	59,04,03,226.00	
	(b) Rebate for Feb '22	59,69,699.00	
	(c) Amount against TDS	5,96,970.00	
	(d) Other Adjustment (if any)	-	
	Total Payment and Adjustment: (a+b+c+d)		(59,69,69,894.00)
7	**Total amount claimed through this bill: Item (3 to 6)**		1,62,30,24,843.00
	(Rounded off to the nearest Rupee)		1,62,30,24,843.00

(Rupees one hundred sixty two crore thirty lakh twenty four thousand eight hundred forty three only)

Checked by

DGM(F), PP

DGM (EBC)

For & on behalf of GRIDCO

Sr.GM(T&BS)

Note:

1. The BSP Bill of Supply for the month has been prepared in line with the Bulk Supply Agreement executed with TPSODL and ARR & BSP Order dated 24.03.2022 in Case No 107/2021.
2. The billing for Bulk Supply of Power has been done based on the actual energy consumption statement provided by SLDC and in line with the Clause No. 388 of the BSP order Dt.24.03.2022 of GRIDCO for FY-2022-23 in Case No.107/2021 in the matter of overdrawal by the DISCOMs and as per the rates stipulated at Clause No.384 & 392 of the said BSP Order.
4. Rebate for prompt payment & Delayed Payment Surcharge shall be admissible/imposed as per the Clause No. 389 & 390 of BSP Order of GRIDCO Dt.24/03/2022 in case No.107 of 2021 of OERC and relevant provisions of Bulk Supply Agreement executed with TPSODL.
5. In case of any default in monthly BSP dues by the DISCOMs, they are liable for imposition of power regulation to the extent of non payment of monthly BSP dues as per Clause No. 385 of the BSP Order.
6. Statutory levy/duty/tax/cess/toll etc. imposed under any law from time to time shall be charged over and above the bulk supply price fixed by the Commission as per Clause No. 391 of the BSP Order.
7. Discrepancy, if any, found later on, towards the billing will be taken into account.
8. Details of the Annexures -

Annexure 1	Energy Flow Statement	Annexure 2	Station Consumption statement
Annexure 3	Open Access Statements	Annexure 4	Main/Check Comparison of Solar Plants
Annexure 5	Energy Accounting Statement of SLDC	Annexure 6	Delayed Payment Surcharge
Annexure 7	Rebate Statement	Annexure 8	Billing Consideration Statement
Annexure 9	Billing Information Statement		

STATE LOAD DESPATCH CENTRE
OFFICE OF Sr.G.M.(POWER SYSTEM) BHUBANESWAR - 751 017 FAX-0674-2748509/2478218

(Annexure - 1)

Report Generated on: 5/6/2022 11:53:35AM

ENERGY FLOW FOR : TPSODL

BILLING CYCLE FROM 01-Apr-2022 **BILLING CYCLE TO** 30-Apr-2022

SUBSTATION	METERING POINT	METER NO	ENERGY(MU)	SMD(KVA)	AVERAGE DEMAND(MWatts)	MAX DEMAND (KVA)	MAX DEMAND(KVA) TIME
Akhusingi	Trf1-12.5MVA 132/33kV	OPT02182	4.503793	7982	6.255269	8839.354906	29-Apr-2022 0:15
Akhusingi	Trf2-12.5MVA 132/33kV	OPT02184	4.353328	7730	6.046289	8582.680104	29-Apr-2022 0:15
Aska	Trf1-40MVA 132/33kV	OPT01167	8.668040	13349	12.038944	19257.331972	25-Apr-2022 7:00
Aska	Trf2-40MVA 132/33kV	OPT00961	8.473950	13039	11.769375	18840.169851	25-Apr-2022 7:00
Aska	Trf3-40MVA 132/33kV	OPT01457	8.511050	13056	11.820903	18866.624172	25-Apr-2022 7:00
Aska New(220/132/33)	Trf1-40MVA 132/33kV	OPT01811	7.490590	8509	10.403597	15836.161151	12-Apr-2022 19:15
Balimela	Trf1-40MVA 220/33kV	OPT01893	5.210410	9379	7.236681	10694.036058	15-Apr-2022 19:15
Balimela	Trf2-20MVA 220/33kV	OPT01895	3.406475	6130	4.731215	6909.504179	15-Apr-2022 19:45
Balugaon	Khallikote Feeder 33kV	OPT00747	9.102790	15301	12.642764	19456.126644	28-Apr-2022 6:15
Berhampur	Trf1-40MVA 132/33kV	OPT00121	13.569353	24812	18.846324	26282.296809	29-Apr-2022 23:00
Berhampur	Trf2-20MVA 132/33kV	B0004476	8.682348	15852	12.058817	16721.731043	29-Apr-2022 23:00
Berhampur	Trf3-40MVA 132/33kV	OPT00123	13.675033	25129	18.993101	26590.148111	29-Apr-2022 23:00
Bhanjanagar	Trf1-40MVA 132/33kV	OPT02084	6.307446	10887	8.760342	17929.440000	19-Apr-2022 17:30
Bhanjanagar	Trf2-16MVA 132/33kV	OPT01273	4.244322	7110	5.894892	10788.982516	04-Apr-2022 19:00
Bhanjanagar	Trf3-40MVA 132/33kV	OPT01277	6.461760	10983	8.974667	16740.943820	04-Apr-2022 19:00
Boudh	Aditya Birla Solar-I 33kV	ORU51513	2.384228	0	3.311428	11694.400000	23-Apr-2022 12:15
Boudh	Aditya Birla Solar-II 33kV	ORU51512	2.396885	0	3.329007	11770.960000	18-Apr-2022 11:30
Boudh	Trf1-20MVA 132/33kV	OPT01156	2.237700	6399	3.107917	7756.000000	07-Apr-2022 11:15
Boudh	Trf2-20MVA 132/33kV	OPT00858	2.251524	6425	3.127117	7808.000000	07-Apr-2022 11:15
Chatrapur	IRE Feeder1 132kV	APM03533	1.278227	163	1.775316	8760.306988	19-Apr-2022 16:00
Chatrapur	IRE Feeder2 132kV	APM03517	4.152088	6281	5.766789	9855.951763	25-Apr-2022 18:00
Chatrapur	Rambha Tr. Fdr 132kV	OPT00688	3.580250	5103	4.972569	11788.672529	22-Apr-2022 15:15
Chatrapur	Trf1-20MVA 132/33kV	OPT00786	6.984004	11788	9.700006	15237.123813	24-Apr-2022 6:30
Chatrapur	Trf2-20MVA 132/33kV	OPT00715	6.447796	9753	8.955272	15359.088515	22-Apr-2022 16:30
Chatrapur	Trf3-20MVA 132/33kV	OPT00107	5.080086	6744	7.055675	11798.054991	22-Apr-2022 6:45
Chikiti	Trf1-40MVA 132/33kV	OPT01593	4.612260	5484	6.405917	11736.438983	19-Apr-2022 21:15
Dabugaon	Trf1-12.5MVA 132/33kV	OPT00717	4.137279	7839	5.746221	10773.133992	30-Apr-2022 19:45
Dabugaon	Trf2-12.5MVA 132/33kV	OPT00861	4.199223	7727	5.832254	10790.402402	30-Apr-2022 19:45
Digapahandi	Trf1-20MVA 132/33kV	APM03896	5.830673	10531	8.098018	12811.132930	27-Apr-2022 19:15
Digapahandi	Trf2-20MVA 132/33kV	APM03549	5.965291	10794	8.285127	16907.625002	20-Apr-2022 12:00
Digapahandi	Trf3-12.5MVA 132/33kV	APM12597	3.799403	6865	5.276949	10560.549006	20-Apr-2022 12:00
G. UDAYAGIRI	Trf1-20MVA 132/33kV	OPT01437	2.853237	6573	3.962829	8984.489746	14-Apr-2022 21:30
Ganjam	GRASIM Ind. Ltd. 132kV	OPT00003	13.693405	22864	19.018618	23475.402686	02-Apr-2022 11:15
Ganjam	Trf1-12.5MVA 132/33kV	OPT00347	0.000000	0	0.000000	0.000000	01-Apr-2022 0:00
Ganjam	Trf2-12.5MVA 132/33kV	OPT00687	2.489991	6664	3.430543	10343.378945	30-Apr-2022 6:16

STATE LOAD DESPATCH CENTRE
OFFICE OF Sr.G.M.(POWER SYSTEM) BHUBANESWAR - 751 017 FAX-0674-2748509/2478218

(Annexure - 1)

Report Generated on: 5/6/2022 11:53:35AM

SUBSTATION	METERING POINT	METER NO	ENERGY(MU)	SMD(KVA)	AVERAGE DEMAND(MWatts)	MAX DEMAND (KVA)	MAX DEMAND(KVA) TIME
Jayanagar	JAYPUR PG 28KV TERTIARY	ER1589-A	0.039663	55	0.055086	55.087500	01-Apr-2022 0:00
Jayanagar	JAYPUR PG 33KV TERTIARY	ER1600-A	0.027433	38	0.038101	38.101389	01-Apr-2022 0:00
Jayanagar	JAYPUR PG 430V TERTIARY	NP5985-A	0.073995	103	0.102771	102.770833	01-Apr-2022 0:00
Jayanagar	Traction Feeder 132kV	OPT00932	8.103290	19888	11.254569	28560.730708	10-Apr-2022 5:15
Jayanagar	Trf1-12.5MVA 132/33kV	OPT00917	0.000000	0	0.000000	0.000000	01-Apr-2022 0:00
Jayanagar	Trf2-20MVA 132/33kV	OPT01052	6.648224	12779	9.233644	16820.817578	15-Apr-2022 11:45
Jayanagar	Trf3-20MVA 132/33kV	APM12835	6.825825	13116	9.480313	13437.472747	29-Apr-2022 20:00
Jayanagar	Trf4-20MVA 132/33kV	OPT02172	6.758536	13020	9.388855	17105.388463	15-Apr-2022 11:45
Kasipur	220/33KV 20MVA TRF 1	OPT01473	0.566392	0	0.786656	2116.015123	11-Apr-2022 19:00
Laxmipur	Trf1-20MVA 220/33kV	OPT00741	3.246177	4	4.508579	12644.628267	01-Apr-2022 18:45
Laxmipur	TRF2-20MVA 220/33KV	OPT01479	2.084594	9546	2.895269	12183.138512	07-Apr-2022 18:45
Laxmipur	UTKAL ALUMINA Fdr-1 220kV	OPT00780	0.105430	5400	0.146431	13351.264623	14-Apr-2022 20:30
Laxmipur	UTKAL ALUMINA Fdr-2 220kV	OPT00875	0.062030	5120	0.086153	8631.199221	09-Apr-2022 18:15
Malkangiri	Trf1-40MVA 220/33kV	OPT01779	4.531350	9281	6.293542	10022.774067	30-Apr-2022 20:45
Malkangiri	Trf2-40MVA 220/33kV	OPT00710	4.580230	9390	6.361431	9870.359669	30-Apr-2022 20:45
Meenakshi s/w	Megalift Feeder 33kV	OPT01557	0.008445	4	0.011729	200.878072	28-Apr-2022 10:00
Mohana	Trf1-12.5MVA 132/33kV	OPT01794	1.962810	3703	2.726125	6683.352452	30-Apr-2022 18:45
Mohana	Trf2-12.5MVA 132/33kV	OPT01886	1.815387	3496	2.521371	4382.810057	25-Apr-2022 19:45
Muniguda	Bissam-Cuttack Tr.132kV	OPT01798	4.275030	1755	5.937542	21167.975813	06-Apr-2022 21:00
Narendrapur	220 KV TATA Feeder-I	OREB9352	0.000000	0	0.000000	0.000000	01-Apr-2022 0:00
Narendrapur	220 KV TATA Feeder-II	OREB9350	16.231850	25080	22.544236	26554.848898	27-Apr-2022 0:30
Narendrapur	Narendrapur Traction 132kV	OPT00859	3.966700	6579	5.507917	14743.676611	17-Apr-2022 6:15
Narendrapur	Trf1-20MVA 132/33kV	OPT01537	3.622166	6693	5.030789	8638.907338	22-Apr-2022 12:15
Narendrapur	Trf2-40MVA 132/33kV	OPT00676	5.795870	10717	8.049819	11289.428684	24-Apr-2022 23:00
Narendrapur	Trf3-40MVA 132/33kV	OPT00856	7.482430	13903	10.392264	17955.856983	22-Apr-2022 12:00
Narendrapur	Trf4-40MVA 132/33kV	OPT01810	5.956020	10921	8.272250	11619.087744	24-Apr-2022 23:00
Paralakhemendi	Trf1-12.5MVA 132/33kV	OPT01956	3.410643	6310	4.737004	9287.708867	29-Apr-2022 15:00
Paralakhemendi	Trf2-12.5MVA 132/33kV	OPT01958	3.412777	6378	4.739968	8242.400621	30-Apr-2022 8:15
Paralakhemendi	Trf3-12.5MVA 132/33kV	OPT00537	3.653001	6761	5.087501	10006.409264	29-Apr-2022 15:00
Phulbani	Trf1-40MVA 132/33kV	OPT01879	4.858930	9406	6.748514	12731.064370	20-Apr-2022 19:15
Phulbani	Trf2-12.5MVA 132/33kV	OPT01880	1.662825	3218	2.309479	4276.914776	20-Apr-2022 19:15
Phulbani	Trf3-40MVA 132/33kV	OPT01883	4.383140	8610	6.087694	10208.780534	02-Apr-2022 8:15
Podagada	Trf2-12.5MVA 132/33kV	OPT01802	1.015041	1388	1.409779	3054.376532	01-Apr-2022 6:45
Potangi	Trf1-40MVA 132/33kV	OPT00247	1.787658	1722	2.482858	5500.738859	09-Apr-2022 6:45
Purushottampur	Trf1-12.5MVA 132/33kV	OPT00151	2.723969	4148	3.783290	7063.463015	30-Apr-2022 16:00
Purushottampur	Trf2-12.5MVA 132/33kV	OPT00156	2.805496	4274	3.896522	7311.461598	30-Apr-2022 16:00
Purushottampur	Trf3-20MVA 132/33kV	OPT01795	4.369820	6656	6.069194	11258.625138	30-Apr-2022 16:45
Rayagada	Traction Feeder 132kV	OPT00740	1.953380	0	2.726917	18659.971544	25-Apr-2022 18:15
Rayagada	Trf1-12.5MVA 132/33kV	OPT01292 OPT01846	2.403158	5484	3.337719	5775.739606	25-Apr-2022 21:30

STATE LOAD DESPATCH CENTRE
OFFICE OF Sr.G.M.(POWER SYSTEM) BHUBANESWAR - 751 017 FAX-0674-2743509/2478218

(Annexure - 1)

Report Generated on: 5/6/2022 11:53:35AM

SUBSTATION	METERING POINT	METER NO	ENERGY(MU)	SMD(KVA)	AVERAGE DEMAND(MWatts)	MAX DEMAND (KVA)	MAX DEMAND(KVA) TIME
Rayagada	Trf2-12.5MVA 132/33kV	OPT01848	2.209468	4302	3.068706	6451.458130	20-Apr-2022 22:45
Rayagada	Trf3-20MVA 132/33kV	OPT01809	3.659249	7900	5.082290	10773.027801	20-Apr-2022 22:30
Sonepur	Manamunda Feeder 33kV	OPT01720	6.800774	14966	9.445519	16643.027129	09-Apr-2022 16:30
Sunabeda	HAL Feeder 132kV	OPT01892	3.215875	5517	4.466493	11383.354554	06-Apr-2022 13:45
Sunabeda	Trf1-12.5MVA 132/33kV	OPT01890	3.362376	6177	4.669965	8133.212895	08-Apr-2022 8:45
Sunabeda	Trf2-12.5MVA 132/33kV	OPT01888	3.237257	5975	4.496190	7093.552002	02-Apr-2022 7:00
Sunabeda	Trf3-20MVA 132/33kV	OPT01891	5.210392	9659	7.239856	12684.814859	08-Apr-2022 8:45
Tentulikhunti	Mukhiguda Fdr 33KV	OPT01790	-0.617774	0	-0.858019	2472.925383	21-Apr-2022 15:15
Tentulikhunti	Trf1-20MVA 132/33kV	OPT01900	3.778622	4009	5.248086	8638.283163	21-Apr-2022 9:30
Tentulikhunti	Trf2-20MVA 132/33kV	OPT01902	3.658794	3792	5.081658	8310.684208	21-Apr-2022 9:30
Tentulikhunti	Trf3-20 MVA 132/33kV	APM12627	2.465451	3286	3.424237	6245.976830	21-Apr-2022 20:15
Tentulikhunti	Vento Energy Infra Pvt Ltd Solar 132KV	Y0639836	0.031520	80	0.043778	400.000000	30-Apr-2022 18:30
Therubali	JK Feeder 132kV(Biomass)	OPT01669	0.001399	44	0.001943	1229.868286	11-Apr-2022 11:30
Therubali	Trf1-12.5MVA 132/33kV	OPT01398	4.643627	8972	6.449482	22944.042190	05-Apr-2022 18:45
Therubali	Trf2-12.5MVA 132/33kV	OPT01226	4.333618	8337	6.018914	8448.715879	25-Apr-2022 22:15
Umerkote	Trf1-20MVA 132/33kV	OPT00674	8.022857	16207	11.142857	16902.000828	02-Apr-2022 19:15
Umerkote	Trf2-20MVA 132/33kV	OPT01238	8.274968	16660	11.493039	17313.366726	02-Apr-2022 19:15

TOTAL: 392.531347 687,889

AT: 30-Apr-2022 22:15

DETAILS

TOTAL ENERGY CONSUMED	392.531347
STATION CONSUMPTION	0.342560
NET CONSUMPTION	392.188787

GRIDCO LIMITED

(A Govt. of Odisha Undertaking)
(Formerly Grid Corporation of Orissa Limited)
Regd. Office: Janpath, Bhubaneswar-751022
Ph:0674-2541320/2540098/2540877 Fax:0674-2541904 E-mail:sgm.pp@gridco.co.in
CIN: U40109OR1995SGC003960

Ref. No.: CGM-PP-55/2021/ 554(9) Date: 04-06-2022

To

The Chief Executive Officer,
TP Southern Odisha Distribution Limited
Courtpeta, Berhampur.

Sub: Energy Bill for the Month of May-2022

Dear Sir,

Enclosed please find herewith the Revised Bulk supply energy bill for the month of May-2022 for Rs.90,18,06,691.00 towards supply of power by GRIDCO to TPSODL.

You are requested to kindly release the payment at the earliest. The rebate for prompt payment shall be admissible as per tariff order. The Energy Flow Statement, furnished by SLDC, based on which the bill is prepared are enclosed herewith for your reference.

Thanking You.

Encl: As stated above.

Yours faithfully

4/6/22

Sr.GM (T&BS)

Copy to:

Nodal Officer, DISCOM Monitoring Unit (DMU), GRIDCO, Bhubaneswar
Chief Load Despatcher, SLDC, Mancheswar, Bhubaneswar.
CGM (CF)/CFO, GRIDCO, Bhubaneswar.
DGM (F) PP Branch, GRIDCO, Bhubaneswar.
DGM (L & RA), GRIDCO, Bhubaneswar
Manager, Union Bank of India, Main Branch, Bhubaneswar
GUARD File

G R I D C O Limited
Registered Office: Janpath
Bhubaneswar 751022
CIN: U40109OR1995SGC003950

Bill of Supply

For TPSODL
May-2022

GRIDCO GSTIN:21AABCG5398P3Z3
Goods Description: Electricity
HSN Code: 27160000
Ref No: GR/BS/22-23/80

Date: 04-Jun-22
Pay By Date: 04-Jul-22

The Chief Executive Officer
TP Southern Odisha Distribution Limited
Courtpeta, Berhampur, Odisha
GSTIN: 21AAICT3239P1Z1

A. Total Energy for the month	397.271670 MU
B. SMD approved by OERC	7,20,000 kVA
SMD permitted by OERC	7,92,000 kVA
Actual SMD occurred	7,08,824 kVA
Excess SMD drawal	0 kVA

Item No			Amount (Rs.)
1	Current Charges		
	(a) Bulk Supply Price @ 227 Paise per kWh for the Energy	90,18,06,690.90	
	(b) Excess Demand Charge @ Rs 250 per kVA	0.00	
	Sub Total: (a+b)		90,18,06,690.90
2	Debit/Credit Bills:		
	Debit/Credit Bill for the month of _____ vide Bill No. _____ Dtd.____	0.00	
	Sub Total:		0.00
3	Total Current Charges: Items (1+2)		90,18,06,691.00
4	Add Late Payment Surcharge for the month of May-2022 (Annex-6)		-
5	Add: Previous amount outstanding :-		
	(i) Outstanding energy charges	1,62,30,24,843.00	
	(ii) Outstanding LPS	-	
	Total Previous Outstanding: (i+ii)		1,62,30,24,843.00
6	Less payment received during the month		
	(a) Collection for Mar '22	75,18,62,796.00	
	(b) Rebate against Mar '22	76,02,253.00	
	(c) Amount against TDS on Mar'22	7,60,225.00	
	(d) Other Adjustment (if any)	-	
	Total Payment and Adjustment: (a+b+c+d)		(76,02,25,274.00)
7	Total amount claimed through this bill: item (3 to 7)		1,76,46,06,260.00
	(Rounded off to the nearest Rupee)		1,76,46,06,260.00

(Rupees one hundred seventy six crore forty six lakh six thousand two hundred sixty only)

Checked by

DGM(F), PP

M.S.Sahoo
DGM (EBC)

For & on behalf of GRIDCO

Sr.GM(T&BS)

Note:

1. The BSP Bill of Supply for the month has been prepared in line with the Bulk Supply Agreement executed with TPSODL and ARR & BSP Order dated 24.03.2022 in Case No 107/2021.
2. The billing for Bulk Supply of Power has been done based on the actual energy consumption statement provided by SLDC and in line with the Clause No. 388 of the BSP order Dt.24.03.2022 of GRIDCO for FY-2022-23 in Case No.107/2021 in the matter of overdrawal by the DISCOMs and as per the rates stipulated at Clause No.384 & 392 of the ssid BSP Order.
4. Rebate for prompt payment & Delayed Payment Surcharge shall be admissible/imposed as per the Clause No. 389 & 390 of BSP Order of GRIDCO Dt.24/03/2022 in case No.107 of 2021 of OERC and relevant provisions of Bulk Supply Agreement executed with TPSODL.
5. In case of any default in monthly BSP dues by the DISCOMs, they are liable for imposition of power regulation to the extent of non payment of monthly BSP dues as per Clause No. 385 of the BSP Order.
6. Statutory levy/duty/tax/cess/toll etc. imposed under any law from time to time shall be charged over and above the bulk supply price fixed by the Commission as per Clause No. 391 of the BSP Order.
7. Discrepancy, if any, found later on, towards the billing will be taken into account.
8. **Details of the Annexures -**

Annexure 1	Energy Flow Statement	Annexure 2	Station Consumption statement
Annexure 3	Open Access Statements	Annexure 4	Main/Check Comparison of Solar Plants
Annexure 5	Energy Accounting Statement of SLDC	Annexure 6	Delayed Payment Surcharge
Annexure 7	Rebate Statement	Annexure 8	Billing Consideration Statement
Annexure 9	Billing Information Statement		

STATE LOAD DESPATCH CENTRE
OFFICE OF Sr.G.M.(POWER SYSTEM) BHUBANESWAR - 751 017 FAX-0674-2748509/2478218

(Annexure - 1)

Report Generated on: 6/4/2022 12:32:09PM

ENERGY FLOW FOR : TPSODL

BILLING CYCLE FROM 01-May-2022 BILLING CYCLE TO 31-May-2022

SUBSTATION	METERING POINT	METER NO	ENERGY(MU)	SMD(KVA)	AVERAGE DEMAND(MWatts)	MAX DEMAND (KVA)	MAX DEMAND(KVA) TIME
Akhusingi	Trf1-12.5MVA 132/33kV	OPT02182	4.336972	6960	5.829264	8913.789523	04-May-2022 11:15
Akhusingi	Trf2-12.5MVA 132/33kV	OPT02184	4.228163	6733	5.683015	8750.513390	21-May-2022 17:00
Aska	Trf1-40MVA 132/33kV	OPT01167	8.921300	14944	11.990995	26477.008695	26-May-2022 5:30
Aska	Trf2-40MVA 132/33kV	OPT00961	8.708760	14584	11.705323	19306.247693	02-May-2022 16:45
Aska	Trf3-40MVA 132/33kV	OPT01457	8.699380	14654	11.692715	18525.873799	15-May-2022 8:00
Aska New(220/132/33)	Trf1-40MVA 132/33kV	OPT01811	8.153540	14380	10.959069	15765.176815	29-May-2022 19:15
Balimela	Trf1-40MVA 220/33kV	OPT01893	5.131850	10653	6.897648	11778.353026	26-May-2022 9:15
Balimela	Trf2-20MVA 220/33kV	OPT01895	3.345535	6923	4.496587	6922.884948	31-May-2022 20:00
Balugaon	Khallikote Feeder 33kV	OPT00747	9.438119	17662	12.685844	19267.244328	03-May-2022 6:15
Berhampur	Trf1-40MVA 132/33kV	OPT00121	14.585352	24180	19.603967	30979.182779	16-May-2022 16:00
Berhampur	Trf2-20MVA 132/33kV	B0004476	9.227241	15319	12.402208	18035.825893	29-May-2022 23:00
Berhampur	Trf3-40MVA 132/33kV	OPT00123	14.761958	24463	19.841341	31310.684204	16-May-2022 16:00
Bhanjanagar	Trf1-40MVA 132/33kV	OPT02084	6.749239	11643	9.071557	18276.014454	20-May-2022 19:15
Bhanjanagar	Trf2-16MVA 132/33kV	OPT01273	4.323962	7555	5.811763	11907.403411	20-May-2022 19:15
Bhanjanagar	Trf3-40MVA 132/33kV	OPT01277	6.819970	11760	9.166626	16708.560880	20-May-2022 14:15
Boudh	Aditya Birla Solar-I 33kV	ORU51513	2.599070	0	3.493374	12747.840000	16-May-2022 11:30
Boudh	Aditya Birla Solar-II 33kV	ORU51512	2.546569	0	3.422607	12575.960000	19-May-2022 11:30
Boudh	Trf1-20MVA 132/33kV	OPT01155	2.233663	6161	3.002235	8780.000000	01-May-2022 11:00
Boudh	Trf2-20MVA 132/33kV	OPT00858	2.247601	6170	3.020969	8816.000000	01-May-2022 11:00
Chatrapur	IRE Feeder1 132kV	APM03533	2.002295	3275	2.691256	9012.121286	26-May-2022 1:00
Chatrapur	IRE Feeder2 132kV	APM03517	3.394958	5036	4.563115	9452.116682	01-May-2022 4:30
Chatrapur	Rambha Tr. Fdr 132kV	OPT00888	3.544940	6630	4.764764	12117.953623	10-May-2022 1:30
Chatrapur	Trf1-20MVA 132/33kV	OPT00786	7.292128	10292	9.801247	16549.133150	01-May-2022 17:30
Chatrapur	Trf2-20MVA 132/33kV	OPT00715	6.564926	8734	8.823825	14076.081841	01-May-2022 17:30
Chatrapur	Trf3-20MVA 132/33kV	OPT00107	5.153431	6970	6.926555	11016.074902	01-May-2022 17:45
Chikiti	Trf1-40MVA 132/33kV	OPT01593	6.874710	9102	9.240202	14436.463858	03-May-2022 23:15
Dabugaon	Trf1-12.5MVA 132/33kV	OPT00717	3.505838	7214	4.711879	9149.455940	24-May-2022 22:15
Dabugaon	Trf2-12.5MVA 132/33kV	OPT00861	3.528066	7221	4.742051	9158.428686	24-May-2022 22:15
Digapahandi	Trf1-20MVA 132/33kV	APM03696	5.285869	9479	7.104662	11737.634784	01-May-2022 16:30
Digapahandi	Trf2-20MVA 132/33kV	APM03549	5.404915	9930	7.264670	12235.573856	12-May-2022 8:30
Digapahandi	Trf3-12.5MVA 132/33kV	APM12597	3.452967	6226	4.641085	7958.505670	12-May-2022 8:15
G. UDAYAGIRI	Trf1-20MVA 132/33kV	OPT02312	0.276221	3690	2.084690	3689.967076	31-May-2022 20:00
G. UDAYAGIRI	Trf2-20MVA 132/33kV	OPT01437	2.760825	3593	3.710786	7360.156520	07-May-2022 9:30
Ganjam	GRASIM Ind. Ltd. 132kV	OPT00003	13.368786	15348	17.968771	23709.307244	04-May-2022 11:30
Ganjam	Trf1-12.5MVA 132/33kV	OPT00347	0.000000	0	0.000000	0.000000	01-May-2022 0:00

(Annexure - 1)

Report Generated on: 6/4/2022 12:32:09PM

SUBSTATION	METERING POINT	METER NO	ENERGY(MU)	SMD(KVA)	AVERAGE DEMAND(MWatts)	MAX DEMAND (KVA)	MAX DEMAND(KVA) TIME
Ganjam	Trf2-12.5MVA 132/33kV	OPT00697	3.957301	7760	5.318953	9968.029695	19-May-2022 20:00
Jayanagar	JAYPUR PG 28KV TERTIARY	ER1599-A	0.035768	48	0.048075	48.075269	01-May-2022 0:00
Jayanagar	JAYPUR PG 33KV TERTIARY	ER1600-A	0.033087	44	0.044472	44.471774	01-May-2022 0:00
Jayanagar	JAYPUR PG 430V TERTIARY	NP5865-A	0.069504	93	0.093419	93.419355	01-May-2022 0:00
Jayanagar	Traction Feeder 132kV	OPT00932	6.777420	17478	9.109435	27178.933018	05-May-2022 22:15
Jayanagar	Trf1-12.5MVA 132/33kV	OPT00917	0.000000	0	0.000000	0.000000	01-May-2022 0:00
Jayanagar	Trf2-20MVA 132/33kV	OPT01052	6.444128	10068	8.661482	12873.531295	09-May-2022 20:30
Jayanagar	Trf3-20MVA 132/33kV	APM12635	6.624881	10368	8.904141	13187.333011	09-May-2022 19:45
Jayanagar	Trf4-20MVA 132/33kV	OPT02172	6.549419	10234	8.802983	13155.053517	09-May-2022 19:30
Kasipur	220/33KV 20MVA TRF 1	OPT01473	0.492769	1743	0.662324	1989.512503	16-May-2022 19:15
Laxmipur	Trf1-20MVA 220/33kV	OPT00741	1.619836	9478	2.177199	10486.303448	31-May-2022 19:30
Laxmipur	TRF2-20MVA 220/33KV	OPT01479	3.077791	4	4.136816	11604.008205	01-May-2022 7:15
Laxmipur	UTKAL ALUMINA Fdr-1 220kV	OPT00819	0.063350	5360	0.085148	8307.683181	15-May-2022 16:30
Laxmipur	UTKAL ALUMINA Fdr-2 220kV	OPT00875	0.034510	5040	0.046384	5577.868784	01-May-2022 17:45
Malkangiri	Trf1-40MVA 220/33kV	OPT01779	5.046610	9038	6.785766	10409.995197	21-May-2022 20:15
Malkangiri	Trf2-40MVA 220/33kV	OPT00710	5.103440	9328	6.859462	10459.460349	21-May-2022 20:15
Meenakshi s/w	Megalift Feeder 33kV	OPT01557	0.004479	8	0.006020	296.135554	11-May-2022 9:15
Mohana	Trf1-12.5MVA 132/33kV	OPT01794	1.973665	3449	2.652776	4775.834168	21-May-2022 20:15
Mohana	Trf2-12.5MVA 132/33kV	OPT01886	1.859966	3285	2.499954	4517.117665	21-May-2022 20:15
Muniguda	Bissam-Cuttack Tr.132kV	OPT01798	4.518420	13006	6.073145	21978.352987	26-May-2022 15:45
Muniguda	Trf1- 12.5MVA 132/33kV	OPT02161	2.753440	6845	5.616399	9894.534621	21-May-2022 21:15
Narendrapur	220 KV TATA Feeder-I	OREB9352	0.000000	0	0.000000	0.000000	01-May-2022 0:00
Narendrapur	220 KV TATA Feeder-II	OREB9350	17.096700	24001	22.979435	26406.605234	07-May-2022 11:45
Narendrapur	Narendrapur Traction 132kV	OPT00859	4.072510	6890	5.473804	14591.175415	15-May-2022 13:15
Narendrapur	Trf1-20MVA 132/33kV	OPT01837	3.984532	6767	5.355554	7926.160231	31-May-2022 15:00
Narendrapur	Trf2-40MVA 132/33kV	OPT00676	6.408050	10886	8.610282	12767.207995	31-May-2022 14:30
Narendrapur	Trf3-40MVA 132/33kV	OPT00856	8.229150	14181	11.060685	16560.193236	31-May-2022 14:30
Narendrapur	Trf4-40MVA 132/33kV	OPT01810	6.582730	11168	8.847755	13097.053104	31-May-2022 15:00
Paralakhemendi	Trf1-12.5MVA 132/33kV	OPT01956	3.489877	5842	4.690696	7596.367975	03-May-2022 3:45
Paralakhemendi	Trf2-12.5MVA 132/33kV	OPT01958	3.506387	5894	4.715574	7845.795817	03-May-2022 3:45
Paralakhemendi	Trf3-12.5MVA 132/33kV	OPT00537	3.710968	6343	4.987860	7877.349808	02-May-2022 20:15
Phulbani	Trf1-40MVA 132/33kV	OPT01879	4.894620	9000	6.578790	10369.570869	22-May-2022 21:15
Phulbani	Trf2-12.5MVA 132/33kV	OPT01880	1.687765	3067	2.268501	4088.072408	03-May-2022 9:00
Phulbani	Trf3-40MVA 132/33kV	OPT01883	4.454770	8218	5.987594	10924.907322	03-May-2022 8:45
Podagada	Trf2-12.5MVA 132/33kV	OPT01802	0.903562	1785	1.214466	2891.632065	22-May-2022 6:15
Potangi	Trf1-40MVA 132/33kV	OPT00247	1.802137	3960	2.422227	5304.886312	06-May-2022 6:30
Purushottampur	Trf1-12.5MVA 132/33kV	OPT00151	2.707002	4428	3.638443	6762.370753	26-May-2022 11:30
Purushottampur	Trf2-12.5MVA 132/33kV	OPT00156	2.777224	4570	3.732828	6957.264217	26-May-2022 11:30
Purushottampur	Trf3-20MVA 132/33kV	OPT01796	4.328254	7068	5.817546	10898.596607	26-May-2022 9:15
Rayagada	Traction Feeder 132kV	OPT01292	3.771500	6476	5.069220	17287.405820	30-May-2022 17:15

STATE LOAD DESPATCH CENTRE

OFFICE OF Sr.G.M.(POWER SYSTEM) BHUBANESWAR - 751 017 FAX-0674-2748509/2478218

(Annexure - 1)

Report Generated on: 6/4/2022 12:32:09PM

SUBSTATION	METERING POINT	METER NO	ENERGY(MU)	SMD(KVA)	AVERAGE DEMAND(MWatts)	MAX DEMAND (KVA)	MAX DEMAND(KVA) TIME
Rayagada	Trf1-12.5MVA 132/33kV	CPT01846	2.685116	4626	3.609027	5878.103095	21-May-2022 22:45
Rayagada	Trf2-12.5MVA 132/33kV	CPT01848	2.274002	3926	3.056454	5003.091844	21-May-2022 22:45
Rayagada	Trf3-20MVA 132/33kV	CPT01809	3.774697	6592	5.073517	8359.173165	21-May-2022 22:45
Sonepur	Manamunda Feeder 33kV	CPT01720	7.105101	10463	9.549867	16576.993213	03-May-2022 15:45
Sunabeda	HAL Feeder 132kV	CPT01892	3.394256	7552	4.562172	11557.396247	17-May-2022 13:46
Sunabeda	Trf1-12.5MVA 132/33kV	CPT01890	3.443174	7101	4.627922	7668.142930	16-May-2022 19:15
Sunabeda	Trf2-12.5MVA 132/33kV	CPT01888	3.341206	6928	4.490888	7421.814333	16-May-2022 19:15
Sunabeda	Trf3-20MVA 132/33kV	CPT01891	5.337184	11087	7.173634	11966.476507	16-May-2022 19:15
Tentulikhunti	Mukhiguda Fdr 33KV	CPT01790	-0.568604	-1120	-0.764253	1326.179475	16-May-2022 19:15
Tentulikhunti	Trf1-20MVA 132/33kV	CPT01900	3.638017	6115	4.889808	8226.475308	31-May-2022 19:30
Tentulikhunti	Trf2-20MVA 132/33kV	CPT01902	3.527318	7831	4.741019	10942.880791	02-May-2022 10:30
Tentulikhunti	Trf3-20 MVA 132/33kV	APM12627	2.375084	5322	3.192318	7409.818497	02-May-2022 10:45
Tentulikhunti	Vento Energy Infra Pvt Ltd Solar 132KV	Y0639836	0.031740	291	0.042661	34680.000000	19-May-2022 10:45
Theruball	Bhalumaska RTSS 132kV	CPT02158	1.181645	3649	1.588233	14092.068657	13-May-2022 3:00
Theruball	JK Feeder 132kV(Biomass)	CPT01669	0.756657	4572	1.017012	8252.344152	25-May-2022 16:15
Theruball	Trf1-12.5MVA 132/33kV	CPT01398	3.381984	4632	4.545677	9111.084238	23-May-2022 2:30
Theruball	Trf2-12.5MVA 132/33kV	CPT01090	3.035556	4342	4.080048	8309.964018	27-May-2022 15:45
Umerkote	Trf1-20MVA 132/33kV	CPT00674	7.577349	14126	10.184609	15678.835145	01-May-2022 5:45
Umerkote	Trf2-20MVA 132/33kV	CPT01238	7.782198	14478	10.459944	16126.883408	01-May-2022 5:45

TOTAL: **404.991911** **714,213**

AT: 31-May-2022 20:00

DETAILS

TOTAL ENERGY CONSUMED	404.991911
STATION CONSUMPTION	0.355400
NET CONSUMPTION	404.636511

GRIDCO LIMITED

(A Govt. of Odisha Undertaking)
(Formerly Grid Corporation of Orissa Limited)
Regd. Office: Janpath, Bhubaneswar-751022
Ph:0674-2541320/2540098/2540877 Fax:0674-2541904 E-mail:sgm.pp@gridco.co.in
CIN: U40109OR1995SGC003960

Ref. No.: CGM-PP-50/2022/ Date: 04-07-2022

To

The Chief Executive Officer,
TP Southern Odisha Distribution Limited
Courtpeta, Berhampur.

Sub: Energy Bill for the Month of Jun-2022

Dear Sir,

Enclosed please find herewith the Revised Bulk supply energy bill for the month of Jun-2022 for Rs.88,66,43,039.00 towards supply of power by GRIDCO to TPSODL.

You are requested to kindly release the payment at the earliest. The rebate for prompt payment shall be admissible as per tariff order. The Energy Flow Statement, furnished by SLDC, based on which the bill is prepared are enclosed herewith for your reference.

Thanking You.

Encl: As stated above.

Yours faithfully,

4/7/22

Sr.GM (T&BS)

Copy to:

Nodal Officer, DISCOM Monitoring Unit (DMU), GRIDCO, Bhubaneswar
Chief Load Despatcher, SLDC, Mancheswar, Bhubaneswar.
CGM (CF)/CFO, GRIDCO, Bhubaneswar.
DGM (F) PP Branch, GRIDCO, Bhubaneswar.
DGM (L & RA), GRIDCO, Bhubaneswar
Manager, Union Bank of India, Main Branch, Bhubaneswar
GUARD File

G R I D C O Limited

Registered Office: Janpath
Bhubaneswar 751022
CIN: U40109OR1995SGC003960

Bill of Supply

For TPSODL
June-2022

GRIDCO GSTIN:21AABCG5398P1Z3
Goods Description: Electricity
HSN Code: 27160000
Ref No: GRIBS/22-23/ 135

Date: 04-Jul-22
Pay By Date: 03-Aug-22

The Chief Executive Officer
TP Southern Odisha Distribution Limited
Courtpeta, Berhampur, Odisha
GSTIN: 21AAICT3239P1Z1

A. Total Energy for the month	381.211593 MU
B. SMD approved by OERC	7,20,000 kVA
SMD permitted by OERC	7,92,000 kVA
Actual SMD occurred	7,21,418 kVA
Excess SMD drawal	0 kVA

Item No			Amount (Rs.)
1	**Current Charges**		
	(a) Bulk Supply Price @ 227 Paise per kWh for the Energy	86,53,50,316.11	
	(b) Excess Demand Charge @ Rs 250 per kVA	0.00	
	Sub Total: (a+b)		86,53,50,316.11
2	**Debit/Credit Bills:**		
	(a) Debit/Credit Bill for the months from Jul-21 to Mar-22 vide Bill Nos GRIBS/22-23/124-132 Dtd. 04.07.22	1,78,27,287.00	
	(b) Debit Bill for the months of Apr-22 to May-22 vide Bill Nos GRIBS/22-23/133-134 Dtd. 04.07.22	34,65,436.00	
	Sub Total:		2,12,92,723.00
3	**Total Current Charges: Items (1+2)**		88,66,43,039.00
4	**Add Late Payment Surcharge for the month of Jun-2022 (Annex-6)**		-
5	**Add: Previous amount outstanding :-**		
	(i) Outstanding energy charges	1,76,46,06,260.00	
	(ii) Outstanding LPS	-	
	Total Previous Outstanding: (i+ii)		1,76,46,06,260.00
6	**Less payment received during the month**		
	(a) Collection for Apr '22	85,33,13,773.00	
	(b) Rebate against Apr '22	86,27,996.00	
	(c) Amount against TDS on Apr' '22	8,57,800.00	
	(d) Other Adjustment (if any)	-	
	Total Payment and Adjustment: (a+b+c+d)		(86,27,99,569.00)
7	**Total amount claimed through this bill: Item (3 to 7)**		1,78,84,49,730.00
	(Rounded off to the nearest Rupee)		1,78,84,49,730.00

(Rupees one hundred seventy eight crore eighty four lakh forty nine thousand seven hundred thirty only)

Checked by

DGM(F), PP

M.S Sahoo
DGM (EBC)

For & on behalf of GRIDCO

Sr.GM(T&BS)

Note:

1. The BSP Bill of Supply for the month has been prepared in line with the Bulk Supply Agreement executed with TPSODL and ARR & BSP Order dated 24.03.2022 in Case No 107/2021.
2. The billing for Bulk Supply of Power has been done based on the actual energy consumption statement provided by SLDC and in line with the Clause No. 388 of the BSP order Dt.24.03.2022 of GRIDCO for FY-2022-23 in Case No.107/2021 in the matter of overdrawal by the DISCOMs and as per the rates stipulated at Clause No.384 & 387 of the said BSP Order.
4. Rebate for prompt payment & Delayed Payment Surcharge shall be admissible/imposed as per the Clause No. 389 & 390 of BSP Order of GRIDCO Dt.24/03/2022 in case No.107 of 2021 of OERC and relevant provisions of Bulk Supply Agreement executed with TPSODL.
5. In case of any default in monthly BSP dues by the DISCOMs, they are liable for imposition of power regulation to the extent of non payment of monthly BSP dues as per Clause No. 385 of the BSP Order.
6. Statutory levy/duty/tax/cess/toll etc. imposed under any law from time to time shall be charged over and above the bulk supply price fixed by the Commission as per Clause No. 391 of the BSP Order.
7. Discrepancy, if any, found later on, towards the billing will be taken into account.
8. Details of the Annexures -

Annexure 1	Energy Flow Statement	Annexure 2	Station Consumption statement
Annexure 3	Open Access Statements	Annexure 4	Main/Check Comparison of Solar Plants
Annexure 5	Energy Accounting Statement of SLDC	Annexure 6	Delayed Payment Surcharge
Annexure 7	Rebate Statement	Annexure 8	Billing Consideration Statement
Annexure 9	Billing Information Statement		

STATE LOAD DESPATCH CENTRE

OFFICE OF Sr.G.M.(POWER SYSTEM) BHUBANESWAR - 751 017 FAX-0674-2748509/2478218

(Annexure - 1)

Report Generated on: 7/4/2022 5:22:06PM

ENERGY FLOW FOR : TPSODL

BILLING CYCLE FROM 01-Jun-2022 **BILLING CYCLE TO** 30-Jun-2022

SUBSTATION	METERING POINT	METER NO	ENERGY(MU)	SMD(KVA)	AVERAGE DEMAND(MWatts)	MAX DEMAND (KVA)	MAX DEMAND(KVA) TIME
Akhusingi	TrI1-12.5MVA 132/33kV	OPT02182	3.843193	8261	5.337768	9328.550386	02-Jun-2022 21:30
Akhusingi	TrI2-12.5MVA 132/33kV	OPT02184	3.793525	7993	5.268785	8992.493782	02-Jun-2022 21:30
Aska	TrI1-40MVA 132/33kV	OPT00865	8.589450	14905	11.929792	22072.534970	02-Jun-2022 16:00
Aska	TrI2-40MVA 132/33kV	OPT01234	8.424190	14670	11.700264	23992.332108	08-Jun-2022 16:30
Aska	TrI3-40MVA 132/33kV	OPT01457	8.408440	14788	11.678389	23401.093992	08-Jun-2022 16:30
Aska New(220/132/33)	TrI1-40MVA 132/33kV	OPT01811	7.925490	14287	11.007825	16106.048553	10-Jun-2022 8:00
Balimela	TrI1-40MVA 220/33kV	OPT01893	5.087660	10510	7.066236	10940.566713	13-Jun-2022 8:30
Balimela	TrI2-20MVA 220/33kV	OPT01895	3.339004	6848	4.637506	12815.223447	14-Jun-2022 7:45
Balugaon	Khallikote Feeder 33kV	OPT00747	9.187894	17445	12.760964	19273.823492	14-Jun-2022 6:45
Berhampur	TrI1-40MVA 132/33kV	OPT00121	13.960588	23763	19.389705	30720.492067	18-Jun-2022 14:30
Berhampur	TrI2-20MVA 132/33kV	B0004476	8.990784	15084	12.487199	18117.546959	08-Jun-2022 19:15
Berhampur	TrI3-40MVA 132/33kV	OPT00123	14.115853	24056	19.605074	31347.677868	18-Jun-2022 14:30
Bhanjanagar	TrI1-40MVA 132/33kV	OPT02084	6.304710	12638	8.756542	13872.410467	29-Jun-2022 11:45
Bhanjanagar	TrI2-16MVA 132/33kV	OPT01273	4.072198	8130	5.655831	10848.169553	02-Jun-2022 12:30
Bhanjanagar	TrI3-40MVA 132/33kV	OPT01277	6.406110	12638	8.895986	16783.570198	02-Jun-2022 12:45
Boudh	Aditya Birla Solar-I 33kV	ORJ61513	2.042811	0	2.836959	12580.280000	16-Jun-2022 11:15
Boudh	Aditya Birla Solar-II 33kV	ORJ61512	2.005936	0	2.786022	12631.360000	16-Jun-2022 11:45
Boudh	TrI1-20MVA 132/33kV	OPT01155	2.174023	6199	3.019476	10386.000000	16-Jun-2022 9:00
Boudh	TrI2-20MVA 132/33kV	OPT00858	2.115573	6254	2.938296	8648.000000	20-Jun-2022 9:45
Chatrapur	IRE Feeder1 132kV	APM03533	1.787314	2829	2.482361	3864.772053	27-Jun-2022 12:30
Chatrapur	IRE Feeder2 132kV	APM03517	3.320870	5299	4.612320	9345.901717	20-Jun-2022 20:30
Chatrapur	Rambha Tr. Fdr 132kV	OPT00688	3.516110	5128	4.883466	12086.091180	26-Jun-2022 14:00
Chatrapur	TrI1-20MVA 132/33kV	OPT00786	7.634092	13533	10.602906	17557.148743	29-Jun-2022 5:45
Chatrapur	TrI2-20MVA 132/33kV	OPT00715	6.877990	11262	9.552764	15302.570242	28-Jun-2022 22:15
Chatrapur	TrI3-20MVA 132/33kV	OPT00107	5.387716	7890	7.482938	12250.824271	27-Jun-2022 7:15
Chikiti	TrI1-40MVA 132/33kV	OPT01593	5.664240	9792	7.867000	12583.290508	14-Jun-2022 23:00
Dabugaon	TrI1-12.5MVA 132/33kV	OPT00717	3.484362	6939	4.839392	9386.716808	05-Jun-2022 23:30
Dabugaon	TrI2-12.5MVA 132/33kV	OPT00861	3.507477	6949	4.871496	9451.630124	05-Jun-2022 23:30
Digapahandi	TrI1-20MVA 132/33kV	APM03696	5.609789	9695	7.791374	11675.124631	08-Jun-2022 7:00
Digapahandi	TrI2-20MVA 132/33kV	APM03549	5.718277	9655	7.942051	11980.340749	08-Jun-2022 7:15
Digapahandi	TrI3-12.5MVA 132/33kV	APM12597	3.645517	6208	5.063218	7592.888326	08-Jun-2022 7:00
G. UDAYAGIRI	TrI1-20MVA 132/33kV	OPT02312	1.363118	3654	1.893220	4428.089737	06-Jun-2022 22:15
G. UDAYAGIRI	TrI2-20MVA 132/33kV	OPT01437	1.329956	3561	1.847161	4301.534610	06-Jun-2022 22:15
Ganjam	GRASIM Ind. Ltd. 132kV	OPT00003	10.964031	17612	15.227821	21615.969935	09-Jun-2022 13:30
Ganjam	TrI1-12.5MVA 132/33kV	OPT00347	0.000000	0	0.000000	36.000000	25-Jun-2022 12:15

STATE LOAD DESPATCH CENTRE

OFFICE OF Sr.G.M.(POWER SYSTEM) BHUBANESWAR - 751 017 FAX-0674-2748509/2478218

(Annexure - 1)

Report Generated on: 7/4/2022 5:22:06PM

SUBSTATION	METERING POINT	METER NO	ENERGY(MU)	SMD(KVA)	AVERAGE DEMAND(MWatts)	MAX DEMAND (KVA)	MAX DEMAND(KVA) TIME
Ganjam	Trf2-12.5MVA 132/33kV	OPT00765	3.826381	6820	5.314418	9471.885979	28-Jun-2022 19:30
Jayanagar	JAYPUR PG 28KV TERTIARY	ER1599-A	0.022485	31	0.031229	31.229167	01-Jun-2022 0:00
Jayanagar	JAYPUR PG 33KV TERTIARY	ER1600-A	0.031907	44	0.044315	44.315278	01-Jun-2022 0:00
Jayanagar	JAYPUR PG 430V TERTIARY	NP5965-A	0.059786	83	0.083036	83.036111	01-Jun-2022 0:00
Jayanagar	Traction Feeder 132kV	OPT00932	4.937980	17605	6.858306	29901.652128	12-Jun-2022 3:45
Jayanagar	Trf1-12.5MVA 132/33kV	OPT00617	0.000000	0	0.000000	0.000000	01-Jun-2022 0:00
Jayanagar	Trf2-20MVA 132/33kV	OPT01052	5.878564	9962	8.166061	12146.483277	29-Jun-2022 19:15
Jayanagar	Trf3-20MVA 132/33kV	APM12635	6.025838	9844	8.369217	12357.669762	29-Jun-2022 19:30
Jayanagar	Trf4-20MVA 132/33kV	OPT02172	5.976930	10198	8.301292	12370.409202	29-Jun-2022 19:15
Kasipur	220/33KV 20MVA TRF 1	OPT01473	0.629756	1881	0.874661	2277.981563	13-Jun-2022 19:30
Laxmipur	Trf1-20MVA 220/33kV	OPT00797	2.492013	11610	3.461129	11610.169000	02-Jun-2022 19:45
Laxmipur	TRF2-20MVA 220/33KV	OPT01479	1.672925	0	2.323607	11162.148180	07-Jun-2022 19:15
Laxmipur	UTKAL ALUMINA Fdr-1 220kV	OPT00819	0.865329	5400	1.201833	15252.645672	09-Jun-2022 11:30
Laxmipur	UTKAL ALUMINA Fdr-2 220kV	OPT00890	0.210730	5080	0.292681	10162.204485	22-Jun-2022 12:15
Malkangiri	Trf1-40MVA 220/33kV	OPT01779	4.622190	9888	6.419708	10295.630141	03-Jun-2022 22:00
Malkangiri	Trf2-40MVA 220/33kV	OPT00710	4.671940	9853	6.488806	10412.684572	03-Jun-2022 22:15
Meenakshi s/w	Megalift Feeder 33kV	OPT01557	0.017800	0	0.024722	432.666153	24-Jun-2022 12:15
Mohana	Trf1-12.5MVA 132/33kV	OPT01794	1.879798	4230	2.610831	4636.162255	09-Jun-2022 21:00
Mohana	Trf2-12.5MVA 132/33kV	OPT01886	1.773249	4027	2.462846	4300.865029	09-Jun-2022 21:00
Muniguda	Bissam-Cuttack Tr.132kV	OPT01798	4.408090	7406	6.122347	24072.058491	19-Jun-2022 7:15
Muniguda	Trf1- 12.5MVA 132/33kV	OPT02161	3.635484	8918	5.049283	9779.487948	05-Jun-2022 22:15
Narendrapur	220 KV TATA Feeder-I	OREB9352	0.000000	0	0.000000	0.000000	01-Jun-2022 0:00
Narendrapur	220 KV TATA Feeder-II	OREB9350	16.863130	22649	23.421014	25680.778804	30-Jun-2022 1:45
Narendrapur	Narendrapur Traction 132kV	OPT00859	3.942390	7703	5.475642	13572.324782	06-Jun-2022 11:15
Narendrapur	Trf1-20MVA 132/33kV	OPT01837	3.898593	6457	5.411936	8321.962269	08-Jun-2022 1:00
Narendrapur	Trf2-40MVA 132/33kV	OPT00676	6.252090	10332	8.683456	19488.200245	04-Jun-2022 11:30
Narendrapur	Trf3-40MVA 132/33kV	OPT00856	8.058010	13402	11.188903	19232.139767	08-Jun-2022 0:30
Narendrapur	Trf4-40MVA 132/33kV	OPT01810	6.447990	10701	8.955542	20003.719654	04-Jun-2022 11:30
Paralakhemendi	Trf1-12.5MVA 132/33kV	OPT01957	3.271502	5277	4.543753	8006.433413	03-Jun-2022 12:15
Paralakhemendi	Trf2-12.5MVA 132/33kV	OPT01958	3.295430	5342	4.576986	7816.669367	03-Jun-2022 12:15
Paralakhemendi	Trf3-12.5MVA 132/33kV	OPT00537	3.476093	5732	4.826518	7912.289176	08-Jun-2022 0:00
Phulbani	Trf1-40MVA 132/33kV	OPT01879	4.363120	9175	6.059889	13008.551034	02-Jun-2022 20:15
Phulbani	Trf2-12.5MVA 132/33kV	OPT01880	1.402055	3124	1.947299	4540.678363	02-Jun-2022 20:15
Phulbani	Trf3-40MVA 132/33kV	OPT01883	4.063260	8402	5.643417	13141.018747	28-Jun-2022 18:15
Podagada	Trf2-12.5MVA 132/33kV	OPT01802	1.006373	2352	1.397740	3021.954044	10-Jun-2022 6:45
Potangi	Trf1-40MVA 132/33kV	OPT00247	1.461031	4204	2.029210	4247.738222	02-Jun-2022 19:30
Purushottampur	Trf1-12.5MVA 132/33kV	OPT00151	2.680053	4511	3.723546	7491.672460	08-Jun-2022 16:15
Purushottampur	Trf2-12.5MVA 132/33kV	OPT00156	2.754769	4645	3.826088	7699.886490	08-Jun-2022 16:30
Purushottampur	Trf3-20MVA 132/33kV	OPT01795	4.291537	7194	5.960468	12009.237662	08-Jun-2022 16:15
Rayagada	Traction Feeder 132kV	OPT01202	3.527120	11957	4.898778	16781.322951	30-Jun-2022 18:00

STATE LOAD DESPATCH CENTRE
OFFICE OF Sr.G.M.(POWER SYSTEM) BHUBANESWAR - 751 017 FAX-0674-2748509/2478218

(Annexure - 1)

Report Generated on: 7/4/2022 5:22:06PM

SUBSTATION	METERING POINT	METER NO	ENERGY(MU)	SMD(KVA)	AVERAGE DEMAND(MWatts)	MAX DEMAND (KVA)	MAX DEMAND(KVA) TIME
Rayagada	Trf1-12.5MVA 132/33kV	OPT01846	2.438884	4870	3.387339	6158.901201	08-Jun-2022 14:45
Rayagada	Trf2-12.5MVA 132/33kV	OPT01848	2.066439	4144	2.870050	5255.971081	09-Jun-2022 23:30
Rayagada	Trf3-20MVA 132/33kV	OPT01809	3.431415	6928	4.765854	8737.202288	08-Jun-2022 14:45
Sonapur	Manamunda Feeder 33kV	OPT01720	5.521111	11375	7.668210	13060.052695	04-Jun-2022 16:15
Sunabeda	HAL Feeder 132kV	OPT01892	3.809474	7156	5.290936	13457.498727	06-Jun-2022 9:00
Sunabeda	Trf1-12.5MVA 132/33kV	OPT01890	3.492988	7240	4.851372	7863.962115	20-Jun-2022 11:00
Sunabeda	Trf2-12.5MVA 132/33kV	OPT01888	3.389750	7001	4.707986	7654.094852	20-Jun-2022 11:00
Sunabeda	Trf3-20MVA 132/33kV	OPT01891	5.399824	11292	7.499756	11644.844817	03-Jun-2022 19:15
Tentulikhunti	Mukhiguda Fdr 33KV	OPT01790	-0.657023	-1193	-0.912532	2603.536057	13-Jun-2022 22:00
Tentulikhunti	Trf1-20MVA 132/33kV	OPT01900	3.395698	8018	4.716247	8131.248367	02-Jun-2022 19:15
Tentulikhunti	Trf2-20MVA 132/33kV	OPT01902	3.280708	7740	4.556639	7842.531224	02-Jun-2022 19:15
Tentulikhunti	Trf3-20 MVA 132/33kV	APM12627	2.209523	5298	3.068781	5298.363645	02-Jun-2022 19:45
Tentulikhunti	Vento Energy Infra Pvt Ltd Solar 132KV	Y0639636	0.030000	330	0.041667	35120.000000	15-Jun-2022 12:15
Theruball	Bhalumaska RTSS 132kV	OPT02158	1.054647	971	1.464788	14049.414564	10-Jun-2022 18:30
Theruball	JK Feeder 132kV(Biomass)	OPT01669	1.701764	4949	2.363561	13441.457659	11-Jun-2022 3:15
Theruball	Trf1-12.5MVA 132/33kV	OPT01398	2.779707	7282	3.860704	8814.243927	06-Jun-2022 16:15
Theruball	Trf2-12.5MVA 132/33kV	OPT01090	1.822445	0	2.531174	4992.381010	08-Jun-2022 22:15
Umerkote	Trf1-20MVA 132/33kV	OPT00674	6.658650	14447	9.248125	15223.503933	09-Jun-2022 21:30
Umerkote	Trf2-20MVA 132/33kV	OPT01238	6.839213	14905	9.498907	15640.638862	09-Jun-2022 21:30

TOTAL: 383.952745 726,807

AT: 02-Jun-2022 19:45

DETAILS

TOTAL ENERGY CONSUMED	383.952745
STATION CONSUMPTION	0.394939
NET CONSUMPTION	383.557806

GRIDCO LIMITED

(A Govt. of Odisha Undertaking)
(Formerly Grid Corporation of Orissa Limited)
Regd. Office: Janpath, Bhubaneswar-751022
Ph:0674-2541320/2540098/2540877 Fax:0674-2541904 E-mail:sgm.pp@gridco.co.in
CIN: U40109OR1995SGC003960

Ref. No.: CGM-PP-50/2022/ 788(10) Date: 03-08-2022

To

The Chief Executive Officer,
TP Southern Odisha Distribution Limited
Courtpeta, Berhampur.

Sub: Energy Bill for the Month of Jul-2022

Dear Sir,

Enclosed please find herewith the Bulk supply energy bill for the month of Jul-2022 for Rs.83,32,23,972.00 towards supply of power by GRIDCO to TPSODL.

You are requested to kindly release the payment at the earliest. The rebate for prompt payment shall be admissible as per tariff order. The Energy Flow Statement, furnished by SLDC, based on which the bill is prepared are enclosed herewith for your reference.

Thanking You.

Encl: As stated above.

Yours faithfully,

03/08/22

GM (T&BS)

Copy to:

Nodal Officer, DISCOM Monitoring Unit (DMU), GRIDCO, Bhubaneswar
Chief Load Despatcher, SLDC, Mancheswar, Bhubaneswar.
CGM (CF)/CFO, GRIDCO, Bhubaneswar.
DGM (F) PP Branch, GRIDCO, Bhubaneswar.
DGM (L & RA), GRIDCO, Bhubaneswar
Manager, Union Bank of India, Main Branch, Bhubaneswar
GUARD File

G R I D C O Limited
Registered Office: Janpath
Bhubaneswar 751022
CIN: U40109OR1995SGC003960

Bill of Supply
For TPSODL
July-2022

GRIDCO GSTIN:21AABCG5398P1Z3
Goods Description: Electricity
HSN Code: 27160000
Ref No: GR/BS/22-23/ 192

Date: 03-Aug-22
Pay By Date: 02-Sep-22

The Chief Executive Officer
TP Southern Odisha Distribution Limited
Courtpeta, Berhampur, Odisha
GSTIN: 21AAICT3239P1Z1

A. Total Energy for the month	367.058793 MU
B. SMD approved by OERC	7,20,000 kVA
SMD permitted by OERC	7,92,000 kVA
Actual SMD occurred	6,74,649 kVA
Excess SMD drawal	0 kVA

Item No			Amount (Rs.)
1	**Current Charges**		
	(a) Bulk Supply Price @ 227 Paise per kWh for the Energy	83,32,23,460.11	
	(b) Excess Demand Charge @ Rs 250 per kVA	0.00	
	Sub Total: (a+b)		83,32,23,460.11
2	**Debit/Credit Bills:**		
	(a) **Debit** Bill for FY- 20-21 vide Bill Nos GR/BS/22-23/169 Dtd. 03.06.22	512.00	
	Sub Total:		512.00
3	**Total Current Charges: Items (1+2)**		83,32,23,972.00
4	**Add Late Payment Surcharge for the month of Jul-2022 (Annex-6)**		-
5	**Add: Previous amount outstanding :-**		
	(i) Outstanding energy charges	1,78,84,49,730.00	
	(ii) Outstanding LPS	-	
	Total Previous Outstanding: (i+ii)		1,78,84,49,730.00
6	**Less payment received during the month**		
	(a) Collection for May '22	89,18,06,617.00	
	(b) Rebate on May'22	90,18,057.00	
	(c) Amount against TDS	9,01,807.00	
	(d) Other Adjustment (if any)	-	
	Total Payment and Adjustment: (a+b+c+d)		(90,18,06,691.00)
7	**Total amount claimed through this bill: Item (1 to 7)**		1,71,98,67,011.00
	(Rounded off to the nearest Rupee)		1,71,98,67,011.00

(Rupees one hundred seventy one crore ninety eight lakh sixty seven thousand eleven only)

Checked by

DGM(F), PP

DGM (EBC)

For & on behalf of GRIDCO

GM(T&BS)

Note:

1. The BSP Bill of Supply for the month has been prepared in line with the Bulk Supply Agreement executed with TPSODL and ARR & BSP Order dated 24.03.2022 in Case No 107/2021.
2. The billing for Bulk Supply of Power has been done based on the actual energy consumption statement provided by SLDC and in line with the Clause No. 388 of the BSP order Dt.24.03.2022 of GRIDCO for FY-2022-23 in Case No.107/2021 in the matter of overdrawal by the DISCOMs and as per the rates stipulated at Clause No.384 & 382 of the said BSP Order.
4. Rebate for prompt payment & Delayed Payment Surcharge shall be admissible/imposed as per the Clause No. 389 & 390 of BSP Order of GRIDCO Dt.24/03/2022 in case No.107 of 2021 of OERC and relevant provisions of Bulk Supply Agreement executed with TPSODL.
5. In case of any default in monthly BSP dues by the DISCOMs, they are liable for imposition of power regulation to the extent of non payment of monthly BSP dues as per Clause No. 386 of the BSP Order.
6. Statutory levy/duty/tax/cess/toll etc. imposed under any law from time to time shall be charged over and above the bulk supply price fixed by the Commission as per Clause No. 391 of the BSP Order.
7. Discrepancy, if any, found later on, towards the billing will be taken into account.
8. Details of the Annexures -

Annexure 1	Energy Flow Statement	Annexure 2	Station Consumption statement
Annexure 3	Open Access Statements	Annexure 4	Main/Check Comparison of Solar Plants
Annexure 5	Energy Accounting Statement of SLDC	Annexure 6	Delayed Payment Surcharge
Annexure 7	Rebate Statement	Annexure 8	Billing Consideration Statement
Annexure 9	Billing Information Statement		

STATE LOAD DESPATCH CENTRE
OFFICE OF Sr.G.M.(POWER SYSTEM) BHUBANESWAR - 751 017 FAX-0674-2748509/2478218

(Annexure - 1)

Report Generated on: 8/3/2022 2:19:45PM

ENERGY FLOW FOR : TPSODL

BILLING CYCLE FROM 01-Jul-2022 BILLING CYCLE TO 31-Jul-2022

SUBSTATION	METERING POINT	METER NO	ENERGY(MU)	SMD(KVA)	AVERAGE DEMAND(MWatts)	MAX DEMAND (KVA)	MAX DEMAND(KVA) TIME
Akhusingi	Trf1-12.5MVA 132/33kV	OPT02182	3.847239	7541	5.171021	7762.057650	31-Jul-2022 21:30
Akhusingi	Trf2-12.5MVA 132/33kV	OPT02184	3.760068	7374	5.053855	7760.267616	19-Jul-2022 9:45
Aska	Trf1-40MVA 132/33kV	OPT01167	8.551720	15046	11.494247	22066.372606	30-Jul-2022 16:00
Aska	Trf2-40MVA 132/33kV	OPT00961	8.371760	14756	11.252366	21667.487164	30-Jul-2022 16:00
Aska	Trf3-40MVA 132/33kV	OPT01457	8.278680	14634	11.127258	17824.028725	28-Jul-2022 7:15
Aska New(220/132/33)	Trf1-40MVA 132/33kV	OPT01811	8.047800	13527	10.816935	15809.920936	20-Jul-2022 19:15
Balimela	Trf1-40MVA 220/33kV	OPT01893	4.570480	9376	6.143118	10478.473171	21-Jul-2022 16:30
Balimela	Trf2-20MVA 220/33kV	OPT01895	3.022610	6095	4.062648	14244.745838	22-Jul-2022 8:00
Balugaon	Khallikote Feeder 33kV	OPT00747	9.342560	16909	12.557204	20774.505145	07-Jul-2022 19:30
Berhampur	Trf1-40MVA 132/33kV	OPT00121	12.989419	20712	17.458896	25242.642802	30-Jul-2022 23:30
Berhampur	Trf2-20MVA 132/33kV	B0004476	8.443481	13209	11.348766	16120.352104	30-Jul-2022 23:30
Berhampur	Trf3-40MVA 132/33kV	OPT00123	13.246314	21133	17.804186	25708.776444	30-Jul-2022 23:30
Bhanjanagar	Trf1-40MVA 132/33kV	OPT02084	6.182105	11095	8.309280	11325.440989	28-Jul-2022 20:15
Bhanjanagar	Trf2-16MVA 132/33kV	OPT01273	4.024834	7135	5.409723	7381.517459	28-Jul-2022 20:00
Bhanjanagar	Trf3-40MVA 132/33kV	OPT01277	6.249790	11225	8.400255	11468.565734	28-Jul-2022 20:15
Boudh	Aditya Birla Solar-I 33kV	ORU51513	1.776687	0	2.388020	12488.240000	14-Jul-2022 10:30
Boudh	Aditya Birla Solar-II 33kV	ORU51512	1.753889	0	2.357378	12451.000000	29-Jul-2022 10:45
Boudh	Trf1-20MVA 132/33kV	OPT01155	2.057019	5354	2.764810	9628.000000	17-Jul-2022 12:00
Boudh	Trf2-20MVA 132/33kV	OPT00858	2.067495	5377	2.778891	9686.000000	17-Jul-2022 12:00
Chatrapur	IRE Feeder1 132kV	APM03533	2.186368	3723	2.938667	3865.072970	11-Jul-2022 16:00
Chatrapur	IRE Feeder2 132kV	APM03517	3.127315	5076	4.203380	5741.687286	26-Jul-2022 20:30
Chatrapur	Rambha Tr. Fdr 132kV	OPT00688	3.660070	5689	4.919449	12244.247829	12-Jul-2022 10:45
Chatrapur	Trf1-20MVA 132/33kV	OPT00786	8.185441	11656	11.001937	17655.541906	01-Jul-2022 6:15
Chatrapur	Trf2-20MVA 132/33kV	OPT00715	7.376926	10028	9.915223	15390.220791	01-Jul-2022 6:15
Chatrapur	Trf3-20MVA 132/33kV	OPT00107	5.796198	7007	7.790588	12020.732416	01-Jul-2022 6:30
Chikiti	Trf1-40MVA 132/33kV	OPT01593	5.532460	8917	7.436102	11330.807562	07-Jul-2022 21:30
Dabugaon	Trf1-12.5MVA 132/33kV	OPT00800	3.496170	7453	4.699153	8403.055635	25-Jul-2022 11:15
Dabugaon	Trf2-12.5MVA 132/33kV	OPT00836	3.519163	7472	4.730068	8131.968519	07-Jul-2022 20:30
Digapahandi	Trf1-20MVA 132/33kV	APM03696	5.609648	9440	7.539849	11102.439379	13-Jul-2022 6:45
Digapahandi	Trf2-20MVA 132/33kV	APM03549	5.718038	9973	7.685535	11451.158891	13-Jul-2022 7:00
Digapahandi	Trf3-12.5MVA 132/33kV	APM12597	3.648652	6231	4.904102	7244.806869	13-Jul-2022 6:45
G. UDAYAGIRI	Trf1-20MVA 132/33kV	OPT02312	1.307162	3141	1.756939	4500.932675	29-Jul-2022 13:46
G. UDAYAGIRI	Trf2-20MVA 132/33kV	OPT01437	1.269830	3064	1.706761	3889.244657	11-Jul-2022 20:00
Ganjam	GRASIM Ind. Ltd. 132kV	OPT00003	10.318233	15425	13.868592	22128.912966	02-Jul-2022 14:15
Ganjam	Trf1-20MVA 132/33kV	OPT00347	0.307966	5224	0.413933	5768.855692	29-Jul-2022 19:30

STATE LOAD DESPATCH CENTRE

OFFICE OF Sr.G.M.(POWER SYSTEM) BHUBANESWAR - 751 017 FAX-0674-2748509/2478218

(Annexure - 1)

Report Generated on: 8/3/2022 2:19:45PM

SUBSTATION	METERING POINT	METER NO	ENERGY(MU)	SMD(KVA)	AVERAGE DEMAND(MWatts)	MAX DEMAND (KVA)	MAX DEMAND(KVA) TIME
Ganjam	Trf2-12.5MVA 132/33kV	OPT00697	3.336299	3160	4.484273	11092.841656	10-Jul-2022 8:15
Jayanagar	JAYPUR PG 28KV TERTIARY	ER1599-A	0.000025	0	0.000034	0.033602	01-Jul-2022 0:00
Jayanagar	JAYPUR PG 33KV TERTIARY	ER1600-A	0.028859	39	0.038789	38.788978	01-Jul-2022 0:00
Jayanagar	JAYPUR PG 430V TERTIARY	NP5965-A	0.051420	69	0.069113	69.112903	01-Jul-2022 0:00
Jayanagar	Traction Feeder 132kV	OPT00932	3.850680	17472	5.175645	22289.046637	02-Jul-2022 5:15
Jayanagar	Trf1-12.5MVA 132/33kV	OPT00917	0.000000	0	0.000000	0.000000	01-Jul-2022 0:00
Jayanagar	Trf2-20MVA 132/33kV	OPT01052	5.624491	11788	7.559800	12383.206693	31-Jul-2022 20:00
Jayanagar	Trf3-20MVA 132/33kV	APM12594	5.779034	12123	7.767519	12658.445128	31-Jul-2022 20:00
Jayanagar	Trf4-20MVA 132/33kV	OPT02172	5.716160	12018	7.685699	12658.319468	31-Jul-2022 20:00
Kasipur	220/33KV 20MVA TRF 1	OPT01473	0.535998	1096	0.720427	1868.667975	19-Jul-2022 19:15
Laxmipur	Trf1-20MVA 220/33kV	OPT00741	2.298510	7764	3.089396	9789.711016	28-Jul-2022 8:30
Laxmipur	TRF2-20MVA 220/33KV	OPT01479	1.561020	4	2.098145	9902.779408	19-Jul-2022 19:15
Laxmipur	UTKAL ALUMINA Fdr-1 220kV	OPT00780	0.986900	5280	1.326478	9926.530109	05-Jul-2022 20:00
Laxmipur	UTKAL ALUMINA Fdr-2 220kV	OPT00875	1.359900	5121	1.827823	9268.700017	19-Jul-2022 8:30
Malkangiri	Trf1-40MVA 220/33kV	OPT01779	3.628010	8860	4.876358	8880.360353	31-Jul-2022 19:30
Malkangiri	Trf2-40MVA 220/33kV	OPT00630	3.666650	8991	4.928293	8990.839783	31-Jul-2022 19:30
Meenakshi s/w	Megalift Feeder 33kV	OPT01557	0.036660	4	0.049274	778.973684	27-Jul-2022 11:15
Mohana	Trf1-12.5MVA 132/33kV	OPT01794	1.872119	3801	2.516289	4250.718527	20-Jul-2022 19:30
Mohana	Trf2-12.5MVA 132/33kV	OPT01886	1.767277	3569	2.375372	4699.004150	06-Jul-2022 10:30
Muniguda	Bissam-Cuttack Tr.132kV	OPT01798	4.009120	17874	5.388602	19620.805284	19-Jul-2022 21:15
Muniguda	Trf1- 12.5MVA 132/33kV	OPT02161	3.800124	8675	5.107894	8724.066530	31-Jul-2022 19:15
Narendrapur	220 KV TATA Feeder-I	OREB9352	0.000000	0	0.000000	0.000000	01-Jul-2022 0:00
Narendrapur	220 KV TATA Feeder-II	OREB9350	16.862960	24484	22.665269	25440.786151	21-Jul-2022 15:45
Narendrapur	Narendrapur Traction 132kV	OPT00859	3.935000	3761	5.288978	12649.110641	27-Jul-2022 11:15
Narendrapur	Trf1-20MVA 132/33kV	OPT01837	3.688040	5852	4.957043	9418.920533	01-Jul-2022 23:15
Narendrapur	Trf2-40MVA 132/33kV	OPT00676	5.935960	9493	7.978441	15183.253903	01-Jul-2022 22:30
Narendrapur	Trf3-40MVA 132/33kV	OPT00856	7.382770	12335	9.923078	14746.280887	31-Jul-2022 23:00
Narendrapur	Trf4-40MVA 132/33kV	OPT01810	6.095460	9697	8.192823	15590.869123	01-Jul-2022 23:15
Paralakhemendi	Trf1-12.5MVA 132/33kV	OPT01956	3.210974	3901	4.315825	7042.876685	20-Jul-2022 22:00
Paralakhemendi	Trf2-12.5MVA 132/33kV	OPT01958	3.203969	3923	4.306410	7112.585026	20-Jul-2022 22:00
Paralakhemendi	Trf3-12.5MVA 132/33kV	OPT00537	3.422963	4539	4.600757	7562.251055	20-Jul-2022 22:00
Phulbani	Trf1-40MVA 132/33kV	OPT01879	4.460980	9554	5.996941	10652.398791	22-Jul-2022 17:45
Phulbani	Trf2-12.5MVA 132/33kV	OPT01880	1.492791	3314	2.006440	4065.647304	23-Jul-2022 9:30
Phulbani	Trf3-40MVA 132/33kV	OPT01883	3.941690	8858	5.297970	10904.971343	23-Jul-2022 9:30
Podagada	Trf2-12.5MVA 132/33kV	OPT01802	1.016343	2279	1.366052	3198.011882	31-Jul-2022 7:30
Polangi	Trf1-40MVA 132/33kV	OPT00247	1.360015	954	1.827977	5030.269973	03-Jul-2022 8:45
Purushottampur	Trf1-12.5MVA 132/33kV	OPT00151	2.674497	4453	3.594754	6812.419724	21-Jul-2022 19:15
Purushottampur	Trf2-12.5MVA 132/33kV	OPT00156	2.755182	4579	3.703202	6981.563332	21-Jul-2022 19:15
Purushottampur	Trf3-20MVA 132/33kV	OPT01795	4.289840	7159	5.765914	10903.804841	21-Jul-2022 19:15
Rayagada	Traction Feeder 132kV	OPT01292	3.592620	6317	4.828790	17076.614691	03-Jul-2022 12:30

(Annexure - 1)

Report Generated on: 8/3/2022 2:19:45PM

SUBSTATION	METERING POINT	METER NO	ENERGY(MU)	SMD(KVA)	AVERAGE DEMAND(MWatts)	MAX DEMAND (KVA)	MAX DEMAND(KVA) TIME
Rayagada	Trf1-12.5MVA 132/33kV	OPT01846	2.122654	3859	2.863030	4885.637727	31-Jul-2022 23:15
Rayagada	Trf2-12.5MVA 132/33kV	OPT01848	1.799765	3367	2.419039	4297.945556	31-Jul-2022 23:15
Rayagada	Trf3-20MVA 132/33kV	OPT01809	2.995664	5630	4.026430	6874.521074	31-Jul-2022 23:15
Sonepur	Manamunda Feeder 33kV	OPT01720	5.351167	12646	7.192429	13998.962819	30-Jul-2022 19:00
Sunabeda	HAL Feeder 132kV	OPT01892	3.702027	3588	4.975843	11057.269102	21-Jul-2022 9:00
Sunabeda	Trf1-12.5MVA 132/33kV	OPT01890	3.478179	6324	4.674972	7886.098148	25-Jul-2022 7:45
Sunabeda	Trf2-12.5MVA 132/33kV	OPT01888	3.375653	6113	4.537168	7637.386988	25-Jul-2022 7:45
Sunabeda	Trf3-20MVA 132/33kV	OPT01891	5.394154	9863	7.250207	12303.542254	25-Jul-2022 7:45
Tentulikhunti	Mukhiguda Fdr 33KV	OPT01790	-0.582689	-1140	-0.783184	1843.583467	18-Jul-2022 10:45
Tentulikhunti	Trf1-20MVA 132/33kV	OPT01900	2.832637	5512	3.807308	6113.132094	01-Jul-2022 9:00
Tentulikhunti	Trf2-20MVA 132/33kV	OPT01902	2.927855	5294	3.935289	9886.407654	02-Jul-2022 9:30
Tentulikhunti	Trf3-20 MVA 132/33kV	APM12627	1.970625	3627	2.648690	6751.772047	02-Jul-2022 9:45
Tentulikhunti	Vento Energy Infra Pvt Ltd Solar 132KV	Y0639636	0.030690	330	0.041250	35520.000000	27-Jul-2022 12:45
Therubali	Bhalumaska RTSS 132kV	OPT02158	1.217321	6816	1.636184	17082.810635	12-Jul-2022 19:15
Therubali	JK Feeder 132kV(Biomass)	OPT01669	0.000932	36	0.001253	1194.715029	11-Jul-2022 13:45
Therubali	Trf1-12.5MVA 132/33kV	OPT01398	2.280339	3088	3.064972	6478.845576	09-Jul-2022 21:00
Therubali	Trf2-12.5MVA 132/33kV	OPT01090	2.055669	2899	2.762983	6335.285313	14-Jul-2022 11:15
Umerkote	Trf1-20MVA 132/33kV	OPT00777	5.699625	12692	7.660786	13132.338101	31-Jul-2022 19:45
Umerkote	Trf2-20MVA 132/33kV	OPT00709	5.855505	12730	7.870302	13470.501104	31-Jul-2022 19:45

TOTAL: 369.384662 676,805

AT: 31-Jul-2022 19:30

DETAILS

TOTAL ENERGY CONSUMED	369.384662
STATION CONSUMPTION	0.343450
NET CONSUMPTION	369.041212

GRIDCO LIMITED

(A Govt. of Odisha Undertaking)
(Formerly Grid Corporation of Orissa Limited)
Regd. Office: Janpath, Bhubaneswar-751022
Ph:0674-2541320/2540098/2540877 Fax:0674-2541904 E-mail:sgm.pp@gridco.co.in
CIN: U40109OR1995SGC003960

Ref. No.: CGM-PP-50/2022/ 895 (8) Date: 05-09-2022

To

The Chief Executive Officer,
TP Southern Odisha Distribution Limited
Courtpeta, Berhampur.

Sub: Energy Bill for the Month of Aug-2022

Dear Sir,

Enclosed please find herewith the Bulk supply energy bill for the month of Aug-2022 for Rs.84,43,00,418.00 towards supply of power by GRIDCO to TPSODL.

You are requested to kindly release the payment at the earliest. The rebate for prompt payment shall be admissible as per tariff order. The Energy Flow Statement, furnished by SLDC, based on which the bill is prepared are enclosed herewith for your reference.

Thanking You.

Encl: As stated above.

Yours faithfully,

05/09/2022

Sr.GM (T&BS)

Copy to:

Nodal Officer, DISCOM Monitoring Unit (DMU), GRIDCO, Bhubaneswar
Chief Load Despatcher, SLDC, Mancheswar, Bhubaneswar.
CFO, GRIDCO, Bhubaneswar.
DGM (F) PP Branch, GRIDCO, Bhubaneswar.
DGM (L & RA), GRIDCO, Bhubaneswar
Manager, Union Bank of India, Main Branch, Bhubaneswar
GUARD File

G R I D C O Limited
Registered Office: Janpath
Bhubaneswar 751022
CIN: U40109OR1995SGC003960

Bill of Supply

For TPSODL
August-2022

GRIDCO GSTIN:21AABCG5398P1Z3
Goods Description: Electricity
HSN Code: 27160000
Ref No: GRIBS/22-23/ 253

Date: 05-Sep-22
Pay By Date: 05-Oct-22

The Chief Executive Officer
TP Southern Odisha Distribution Limited
Courtpeta, Berhampur, Odisha
GSTIN: 21AAICT3238P1Z1

A. Total Energy for the month	365.321431 MU
B. SMD approved by OERC	7,20,000 kVA
SMD permitted by OERC	7,92,000 kVA
Actual SMD occurred	6,65,423 kVA
Excess SMD drawal	0 kVA

Item No				Amount (Rs.)
1	Current Charges			
	(a) Bulk Supply Price @ 227 Paise per kWh for the Energy		82,82,79,648.37	
	(b) Excess Demand Charge @ Rs 250 per kVA		0.00	
	Sub Total: (a+b)			82,82,79,648.37
2	Debit/Credit Bills:			
	(a) Debit Bill for FY- 21-22 vide Bill Nos GRIBS/22-23/222-227	Dtd. 23.08.22	1,43,84,094.00	
	(b) Debit Bill for FY- 22-23 vide Bill Nos GRIBS/22-23/230-233	Dtd. 24.08.22	6,36,076.00	
	Sub Total: (a+b)			1,50,20,770.00
3	Total Current Charges: Items (1+2)			84,43,00,418.00
4	Add Late Payment Surcharge for the month of Aug-2022 (Annex-6)			-
5	Add: Previous amount outstanding :-			
	(i) Outstanding energy charges		1,71,98,67,011.00	
	(ii) Outstanding LPS		-	
	Total Previous Outstanding: (i+ii)			1,71,98,67,011.00
6	Less payment received during the month			
	(a) Collection for Jun '22		87,68,89,966.00	
	(b) Rebate on Jun'22		88,66,430.00	
	(c) Amount against TDS		8,86,643.00	
	(d) Other Adjustment (if any)		-	
	Total Payment and Adjustment: (a+b+c+d)			(88,66,43,039.00)
7	Total amount claimed through this bill: Item (3 to 7)			1,67,75,24,390.00
	(Rounded off to the nearest Rupee)			1,67,75,24,390.00

(Rupees one hundred sixty seven crore seventy five lakh twenty four thousand three hundred ninety only)

Checked by

DGM(F), PP

M.S. Sahu
DGM (EBC)

For & on behalf of GRIDCO

Sr. GM(T&BS)

Note:

1. The BSP Bill of Supply for the month has been prepared in line with the Bulk Supply Agreement executed with TPSODL and ARR & BSP Order dated 24.03.2022 in Case No 107/2021
2. The billing for Bulk Supply of Power has been done based on the actual energy consumption statement provided by SLDC and in line with the Clause No. 386 of the BSP order Dt.24.03.2022 of GRIDCO for FY-2022-23 in Case No.107/2021 in the matter of overdrawal by the DISCOMs and as per the rates stipulated at Clause No.384 & 392 of the said BSP Order.
4. Rebate for prompt payment & Delayed Payment Surcharge shall be admissible/imposed as per the Clause No. 389 & 390 of BSP Order of GRIDCO Dt.24/03/2022 in case No.107 of 2021 of OERC and relevant provisions of Bulk Supply Agreement executed with TPSODL.
5. In case of any default in monthly BSP dues by the DISCOMs, they are liable for imposition of power regulation to the extent of non payment of monthly BSP dues as per Clause No. 385 of the BSP Order.
6. Statutory levy/duty/tax/cess/toll etc. imposed under any law from time to time shall be charged over and above the bulk supply price fixed by the Commission as per Clause No. 391 of the BSP Order.
7. Discrepancy, if any, found later on, towards the billing will be taken into account.
8. Details of the Annexures -

Annexure 1	Energy Flow Statement	Annexure 2	Station Consumption statement
Annexure 3	Open Access Statements	Annexure 4	Main/Check Comparison of Solar Plants
Annexure 5	Energy Accounting Statement of SLDC	Annexure 6	Delayed Payment Surcharge
Annexure 7	Rebate Statement	Annexure 8	Billing Consideration Statement
Annexure 9	Billing Information Statement		

STATE LOAD DESPATCH CENTRE
OFFICE OF Sr.G.M.(POWER SYSTEM) BHUBANESWAR - 751 017 FAX-0674-2748509/2478218

(Annexure - 1)

Report Generated on: 9/3/2022 6:32:25PM

ENERGY FLOW FOR : TPSODL

BILLING CYCLE FROM 01-Aug-2022 BILLING CYCLE TO 31-Aug-2022

SUBSTATION	METERING POINT	METER NO	ENERGY(MU)	SMD(KVA)	AVERAGE DEMAND(MWatts)	MAX DEMAND (KVA)	MAX DEMAND(KVA) TIME
Akhusingi	Trf1-12.5MVA 132/33kV	OPT02182	3.749541	6988	5.039706	8569.809798	10-Aug-2022 15:00
Akhusingi	Trf2-12.5MVA 132/33kV	OPT02184	3.652392	6833	4.909130	7424.076921	01-Aug-2022 21:00
Aska	Trf1-40MVA 132/33kV	OPT01187	8.080100	15235	10.860349	18019.766924	11-Aug-2022 7:15
Aska	Trf2-40MVA 132/33kV	OPT01234	8.024530	14913	10.785659	17698.361506	11-Aug-2022 7:30
Aska	Trf3-40MVA 132/33kV	OPT01457	8.038340	15031	10.804220	17766.511474	11-Aug-2022 7:30
Aska New(220/132/33)	Trf1-40MVA 132/33kV	OPT01811	7.724150	15446	10.381922	17167.876080	03-Aug-2022 19:45
Balimela	Trf1-40MVA 220/33kV	OPT01893	4.981180	9100	6.695134	10369.570869	29-Aug-2022 19:15
Balimela	Trf2-20MVA 220/33kV	OPT01896	3.263547	5944	4.386488	13023.052177	19-Aug-2022 19:00
Balugaon	Khallikote Feeder 33kV	OPT00747	8.929650	16674	12.002218	21619.443101	04-Aug-2022 18:15
Berhampur	Trf1-40MVA 132/33kV	OPT00121	12.499002	20507	16.799733	28650.592406	03-Aug-2022 13:15
Berhampur	Trf2-20MVA 132/33kV	B0004476	8.110042	12829	10.900594	18369.457336	03-Aug-2022 13:15
Berhampur	Trf3-40MVA 132/33kV	OPT00123	12.674811	20828	17.036036	29299.338730	03-Aug-2022 12:30
Bhanjanagar	Trf1-40MVA 132/33kV	OPT02084	6.008221	10454	8.075566	11812.618826	30-Aug-2022 19:45
Bhanjanagar	Trf2-16MVA 132/33kV	OPT01273	3.911597	6739	5.257523	7610.187908	30-Aug-2022 19:45
Bhanjanagar	Trf3-40MVA 132/33kV	OPT01277	6.075830	10574	8.166573	11981.919713	30-Aug-2022 19:45
Boudh	Aditya Birla Solar-I 33kV	ORU51513	1.758047	0	2.364311	12387.280000	26-Aug-2022 13:15
Boudh	Aditya Birla Solar-II 33kV	ORU51512	1.858948	0	2.499931	12629.360000	26-Aug-2022 12:00
Boudh	Trf1-20MVA 132/33kV	OPT01155	2.065151	5120	2.775741	9396.000000	16-Aug-2022 10:30
Boudh	Trf2-20MVA 132/33kV	OPT00858	2.075616	5168	2.789806	9524.000000	16-Aug-2022 10:30
Chatrapur	IRE Feeder1 132kV	APM03533	2.687491	3732	3.612220	8747.482897	05-Aug-2022 19:00
Chatrapur	IRE Feeder2 132kV	APM03517	2.919468	5558	3.924016	5853.815696	04-Aug-2022 9:45
Chatrapur	Rambha Tr. Fdr 132kV	OPT00688	3.781320	5305	5.082419	12920.061919	29-Aug-2022 14:00
Chatrapur	Trf1-20MVA 132/33kV	OPT00786	6.765944	10072	9.094011	17100.626421	08-Aug-2022 17:00
Chatrapur	Trf2-20MVA 132/33kV	OPT00715	6.064480	8701	8.151183	14791.037827	08-Aug-2022 17:00
Chatrapur	Trf3-20MVA 132/33kV	OPT00107	4.615163	7194	6.203175	10828.176858	07-Aug-2022 18:15
Chikiti	Trf1-40MVA 132/33kV	OPT01503	5.488070	8544	7.378438	11801.016905	03-Aug-2022 23:15
Dabugaon	Trf1-12.5MVA 132/33kV	OPT00717	3.105883	6690	4.174574	9189.951034	03-Aug-2022 20:45
Dabugaon	Trf2-12.5MVA 132/33kV	OPT00861	3.123423	6708	4.198149	9224.218558	03-Aug-2022 20:45
Digapahandi	Trf1-20MVA 132/33kV	APM03696	5.284834	9516	7.103272	10233.401871	17-Aug-2022 19:15
Digapahandi	Trf2-20MVA 132/33kV	APM03549	5.386855	9874	7.240398	10476.411376	17-Aug-2022 19:30
Digapahandi	Trf3-12.5MVA 132/33kV	APM12597	3.433184	6245	4.614495	6612.705362	11-Aug-2022 7:45
G. UDAYAGIRI	Trf1-20MVA 132/33kV	OPT02312	1.275263	3210	1.714064	3980.435948	19-Aug-2022 18:30
G. UDAYAGIRI	Trf2-20MVA 132/33kV	OPT01437	1.247831	3132	1.677192	3868.734160	19-Aug-2022 18:30
Ganjam	GRASIM Ind. Ltd. 132kV	OPT00003	12.311642	15425	16.547906	20108.305381	17-Aug-2022 10:45
Ganjam	Trf1-20MVA 132/33kV	OPT00347	4.084987	9642	5.490574	11194.587679	01-Aug-2022 19:45

(Annexure - 1)

Report Generated on: 9/3/2022 6:32:25PM

SUBSTATION	METERING POINT	METER NO	ENERGY(MU)	SMD(KVA)	AVERAGE DEMAND(MWatts)	MAX DEMAND (KVA)	MAX DEMAND(KVA) TIME
Ganjam	Trf2-12.5MVA 132/33kV	OPT00687	2.483377	5656	3.337872	6771.749552	01-Aug-2022 19:45
Gurupita	GEDCOL Solar 2MW 33KV	ORA00072	0.001852	0	0.002624	17.796000	24-Aug-2022 12:00
Jayanagar	JAYPUR PG 28KV TERTIARY	ER1599-A	0.026313	35	0.035367	35.366935	01-Aug-2022 0:00
Jayanagar	JAYPUR PG 33KV TERTIARY	ER1600-A	0.035775	48	0.048085	48.084677	01-Aug-2022 0:00
Jayanagar	JAYPUR PG 430V TERTIARY	NP5965-A	0.063064	85	0.084763	84.763441	01-Aug-2022 0:00
Jayanagar	Traction Feeder 132kV	OPT00932	5.807430	16349	7.805685	26210.013354	26-Aug-2022 17:00
Jayanagar	Trf1-12.5MVA 132/33kV	OPT00983	2.177614	0	2.926901	6770.733491	22-Aug-2022 18:00
Jayanagar	Trf2-20MVA 132/33kV	OPT01086	5.273513	11685	7.088055	11727.083184	01-Aug-2022 19:45
Jayanagar	Trf3-20MVA 132/33kV	APM12636	5.414781	11913	7.277932	11954.345526	01-Aug-2022 20:00
Jayanagar	Trf4-20MVA 132/33kV	OPT02172	5.364655	11915	7.210558	11957.121269	01-Aug-2022 19:45
Karapur	220/33KV 20MVA TRF 1	OPT01473	0.548869	1735	0.737458	1936.504067	30-Aug-2022 19:15
Laxmipur	Trf1-20MVA 220/33kV	OPT00741	3.240708	8109	4.355790	10728.000746	31-Aug-2022 7:00
Laxmipur	TRF2-20MVA 220/33KV	OPT01479	0.693593	4	0.932249	10014.956016	17-Aug-2022 7:45
Laxmipur	UTKAL ALUMINA Fdr-1 220kV	OPT00819	0.039500	5320	0.053091	5816.665712	14-Aug-2022 3:00
Laxmipur	UTKAL ALUMINA Fdr-2 220kV	OPT00875	1.201130	5121	1.614422	23169.980578	19-Aug-2022 11:30
Malkangiri	Trf1-40MVA 220/33kV	OPT01779	4.111810	8279	5.526626	8990.839783	30-Aug-2022 21:15
Malkangiri	Trf2-40MVA 220/33kV	OPT00710	4.156050	8398	5.586089	9148.202009	30-Aug-2022 19:15
Meenakshi s/w	Megalift Feeder 33kV	OPT01557	0.027869	0	0.037458	712.235916	23-Aug-2022 11:00
Mohana	Trf1-12.5MVA 132/33kV	OPT01794	1.850335	3753	2.487009	4146.231060	30-Aug-2022 19:00
Mohana	Trf2-12.5MVA 132/33kV	OPT01886	1.743970	3516	2.344046	3942.486625	22-Aug-2022 19:45
Muniguda	Bissam-Cuttack Tr.132kV	OPT01798	4.438050	11541	5.965121	20061.505427	04-Aug-2022 16:00
Muniguda	Trf1- 12.5MVA 132/33kV	OPT02161	4.290360	8568	5.766613	8687.404328	03-Aug-2022 20:00
Narendrapur	220 KV TATA Feeder-I	OREB9352	0.000000	0	0.000000	0.000000	01-Aug-2022 0:00
Narendrapur	220 KV TATA Feeder-II	OREB9350	16.107150	23611	21.649395	25571.296408	01-Aug-2022 9:45
Narendrapur	Narendrapur Traction 132kV	OPT00896	3.950620	7199	5.309973	14743.947911	18-Aug-2022 22:00
Narendrapur	Trf1-20MVA 132/33kV	OPT01837	3.506080	5792	4.712473	7278.912007	02-Aug-2022 22:45
Narendrapur	Trf2-40MVA 132/33kV	OPT00623	5.628160	9376	7.564731	11657.238095	02-Aug-2022 22:45
Narendrapur	Trf3-40MVA 132/33kV	OPT00781	7.240830	12423	9.732298	15027.760978	02-Aug-2022 22:30
Narendrapur	Trf4-40MVA 132/33kV	OPT01810	5.792950	9666	7.786223	11986.659251	02-Aug-2022 22:45
Paralakhemendi	Trf1-12.5MVA 132/33kV	OPT01966	3.170923	4589	4.261993	9424.601848	23-Aug-2022 18:15
Paralakhemendi	Trf2-12.5MVA 132/33kV	OPT01958	3.210483	4590	4.315165	9405.661325	23-Aug-2022 18:15
Paralakhemendi	Trf3-12.5MVA 132/33kV	OPT00537	3.296511	5264	4.430794	9086.222537	04-Aug-2022 16:15
Phulbani	Trf1-40MVA 132/33kV	OPT01879	4.433820	9673	5.959435	10612.747052	31-Aug-2022 19:00
Phulbani	Trf2-12.5MVA 132/33kV	OPT01880	1.388243	3290	1.865918	3565.741438	03-Aug-2022 20:30
Phulbani	Trf3-40MVA 132/33kV	OPT01883	4.006180	8780	5.384651	9781.967015	31-Aug-2022 18:45
Podagada	Trf1-20MVA 132/33kV	OPT02348	0.630163	0	0.929787	5487.646224	13-Aug-2022 8:15
Podagada	Trf2-12.5MVA 132/33kV	OPT01802	0.510425	2157	0.686055	3499.268496	13-Aug-2022 8:00
Potangi	Trf1-40MVA 132/33kV	OPT00247	1.360321	1371	1.828388	5195.521148	12-Aug-2022 19:00
Purushottampur	Trf1-12.5MVA 132/33kV	OPT00151	2.554281	4436	3.433174	6881.591301	10-Aug-2022 6:45
Purushottampur	Trf2-12.5MVA 132/33kV	OPT00156	2.622985	4641	3.525518	7062.485294	10-Aug-2022 7:30

(Annexure - 1)

Report Generated on: 9/3/2022 6:32:25PM

SUBSTATION	METERING POINT	METER NO	ENERGY(MU)	SMD(KVA)	AVERAGE DEMAND(MWatts)	MAX DEMAND (KVA)	MAX DEMAND(KVA) TIME
Purushotampur	Trf3-20MVA 132/33kV	OPT01795	4.097974	6878	5.508030	11113.207998	10-Aug-2022 6:45
Rayagada	Traction Feeder 132kV	OPT01292	3.798490	8889	5.105497	17740.710245	14-Aug-2022 23:45
Rayagada	Trf1-12.5MVA 132/33kV	OPT01846	2.188907	4260	2.942079	5263.065267	05-Aug-2022 15:15
Rayagada	Trf2-12.5MVA 132/33kV	OPT01848	1.852855	3600	2.490128	4432.508996	05-Aug-2022 15:30
Rayagada	Trf3-20MVA 132/33kV	OPT01809	3.076795	8064	4.135477	7463.500519	05-Aug-2022 15:15
Sonepur	Manamunda Feeder 33kV	OPT01720	5.155343	11574	6.929224	14716.813786	04-Aug-2022 21:30
Sunabeda	HAL Feeder 132kV	OPT01892	3.700564	7388	4.973876	11608.767032	06-Aug-2022 9:45
Sunabeda	Trf1-12.5MVA 132/33kV	OPT01890	3.381769	6746	4.545388	7872.834305	04-Aug-2022 6:45
Sunabeda	Trf2-12.5MVA 132/33kV	OPT01888	3.278822	6522	4.407019	7621.141122	04-Aug-2022 6:45
Sunabeda	Trf3-20MVA 132/33kV	OPT01891	5.238578	10531	7.042444	12269.073967	04-Aug-2022 6:45
Tentulikhunti	Mukhiguda Fdr 33KV	OPT01790	-0.624069	-1216	-0.838802	2761.996379	28-Aug-2022 12:00
Tentulikhunti	Trf1-20MVA 132/33kV	OPT01900	3.362128	5021	4.518989	8097.637188	13-Aug-2022 19:00
Tentulikhunti	Trf2-20MVA 132/33kV	OPT01902	3.235909	4811	4.349340	7812.942083	13-Aug-2022 19:00
Tentulikhunti	Trf3-20 MVA 132/33kV	APM12627	2.176277	3821	2.927792	5291.816353	13-Aug-2022 19:15
Tentulikhunti	Vento Energy Infra Pvt Ltd Solar 132KV	Y0639836	0.032120	330	0.043172	36280.000000	02-Aug-2022 11:00
Theruball	Bhalumaska RTSS 132kV	OPT01439	1.179800	566	1.585753	13535.139453	29-Aug-2022 13:00
Theruball	JK Feeder 132kV(Biomass)	OPT01669	0.002926	40	0.003933	1417.564108	30-Aug-2022 10:00
Theruball	Trf1-12.5MVA 132/33kV	OPT01282	1.825680	2486	2.453871	4147.490808	12-Aug-2022 19:15
Theruball	Trf2-12.5MVA 132/33kV	OPT01090	1.703232	2328	2.289290	3898.766985	12-Aug-2022 19:15
Umerkote	Trf1-20MVA 132/33kV	OPT00674	5.790077	9819	7.782362	12607.487934	04-Aug-2022 20:00
Umerkote	Trf2-20MVA 132/33kV	OPT01236	5.946238	10064	7.992255	12921.902027	04-Aug-2022 20:00
		TOTAL:	367.862491	667.579			

AT: 01-Aug-2022 19:30

DETAILS

TOTAL ENERGY CONSUMED	367.862491
STATION CONSUMPTION	0.351828
NET CONSUMPTION	367.510663

GRIDCO LIMITED

(A Govt. of Odisha Undertaking)
(Formerly Grid Corporation of Orissa Limited)
Regd. Office: Janpath, Bhubaneswar-751022
Ph:0674-2541320/2540098/2540877 Fax:0674-2541904 E-mail:sgm.pp@gridco.co.in
CIN: U40109OR1995SGC003960

Ref. No.: CGM-PP-50/2022/ 1271(9) Date: 03/10/2022

To

The Chief Executive Officer,
TP Southern Odisha Distribution Limited
Courtpeta, Berhampur.

Sub: Energy Bill for the Month of Sep-2022

Dear Sir,

Enclosed please find herewith the Bulk supply energy bill for the month of Sep-2022 for Rs.811,597,443.00 towards supply of power by GRIDCO to TPSODL.

You are requested to kindly release the payment at the earliest. The rebate for prompt payment shall be admissible as per tariff order. The Energy Flow Statement, furnished by SLDC, based on which the bill is prepared are enclosed herewith for your reference.

Thanking You.

Encl: As stated above.

Yours faithfully,

03/X/2022

Sr.GM (T&BS)

Copy to:

Nodal Officer, DISCOM Monitoring Unit (DMU), GRIDCO, Bhubaneswar
Chief Load Despatcher, SLDC, Mancheswar, Bhubaneswar.
CFO, GRIDCO, Bhubaneswar.
DGM (F) PP Branch, GRIDCO, Bhubaneswar.
DGM (L & RA), GRIDCO, Bhubaneswar
Manager Capex & MIS Cell, Bhubaneswar
Manager, Union Bank of India, Main Branch, Bhubaneswar
GUARD File

G R I D C O Limited
Registered Office: Janpath
Bhubaneswar 751022
CIN: U40109OR1995SGC003960

Bill of Supply

For TPSODL
September-2022

GRIDCO GSTIN:21AABCG5398P1Z3
Goods Description: Electricity
HSN Code: 27160000
Ref No: GR/BS/22-23/ 292

Date: 3-Oct-22
Pay By Date: 2-Nov-22

The Chief Executive Officer
TP Southern Odisha Distribution Limited
Courtpeta, Berhampur, Odisha
GSTIN: 21AAICT3239P1Z1

A. Total Energy for the month	357.531913 MU
B. SMD approved by OERC	720,000 kVA
SMD permitted by OERC	792,000 kVA
Actual SMD occurred	682,447 kVA
Excess SMD drawal	0 kVA

Item No			Amount (Rs.)
1	Current Charges		
	(a) Bulk Supply Price @ 227 Paise per kWh for the Energy	811,597,442.51	
	(b) Excess Demand Charge @ Rs 250 per kVA	0.00	
	Sub Total: (a+b)		811,597,442.51
2	Debit/Credit Bills:		
	a) Debit Bills for the _____ vide Bill Nos _____ Dtd. _____	0.00	
	Sub Total: (a+b)		0.00
3	Total Current Charges: Items (1+2)		811,597,443.00
4	Add Delayed Payment Surcharge for the month of Sep-2022 (Annex-6)		-
5	Add: Previous amount outstanding :-		
	(i) Outstanding energy charges	1,677,524,390.00	
	(ii) Outstanding DPS	-	
	Total Previous Outstanding: (I+II)		1,677,524,390.00
6	Less payment received during the month		
	(a) Collection for Jul '22	824,058,508.00	
	(b) Rebate on Jul'22	8,333,240.00	
	(c) Amount against TDS	833,224.00	
	(d) Other Adjustment (if any)	-	
	Total Payment and Adjustment: (a+b+c+d)		(833,223,972.00)
7	Total amount claimed through this bill: Item (3 to 6)		1,655,897,861.00
	(Rounded off to the nearest Rupee)		1,655,897,861.00

(Rupees one hundred sixty five crore fifty eight lakh ninety seven thousand eight hundred sixty one only)

Checked by

DGM(F), PP

M.S. Sahoo
DGM (EBC)

For & on behalf of GRIDCO

03/X/2022
Sr.GM(T&BS)

Note:

1. The BSP Bill of Supply for the month has been prepared in line with the Bulk Supply Agreement executed with TPSODL and ARR & BSP Order dated 24.03.2022 in Case No 107/2021.
2. The billing for Bulk Supply of Power has been done based on the actual energy consumption statement provided by SLDC and in line with the Clause No. 388 of the BSP order Dt.24.03.2022 of GRIDCO for FY-2022-23 in Case No.107/2021 in the matter of overdrawal by the DISCOMs and as per the rates stipulated at Clause No.384 & 392 of the said BSP Order.
4. Rebate for prompt payment & Delayed Payment Surcharge shall be admissible/imposed as per the Clause No. 389 & 390 of BSP Order of GRIDCO Dt.24/03/2022 in case No.107 of 2021 of OERC and relevant provisions of Bulk Supply Agreement executed with TPSODL.
5. In case of any default in monthly BSP dues by the DISCOMs, they are liable for imposition of power regulation to the extent of non payment of monthly BSP dues as per Clause No. 385 of the BSP Order.
6. Statutory levy/duty/tax/cess/toll etc. imposed under any law from time to time shall be charged over and above the bulk supply price fixed by the Commission as per Clause No. 391 of the BSP Order.
7. Discrepancy, if any, found later on, towards the billing will be taken into account.
8. Details of the Annexures -

Annexure 1	Energy Flow Statement	Annexure 2	Station Consumption statement
Annexure 3	Open Access Statements	Annexure 4	Main/Check Comparison of Solar Plants
Annexure 5	Energy Accounting Statement of SLDC	Annexure 6	Delayed Payment Surcharge
Annexure 7	Rebate Statement	Annexure 8	Billing Consideration Statement
Annexure 9	Billing Information Statement		

STATE LOAD DESPATCH CENTRE
OFFICE OF Sr.G.M.(POWER SYSTEM) BHUBANESWAR - 751 017 FAX-0674-2748509/2478218

(Annexure - 1)

Report Generated on: 10/3/2022 4:02:47PM

ENERGY FLOW FOR : TPSODL

BILLING CYCLE FROM 01-Sep-2022 BILLING CYCLE TO 30-Sep-2022

SUBSTATION	METERING POINT	METER NO	ENERGY(MU)	SMD(KVA)	AVERAGE DEMAND(MWatts)	MAX DEMAND (KVA)	MAX DEMAND(KVA) TIME
Akhusingi	Trf1-12.5MVA 132/33kV	OPT02182	4.030041	7429	5.597279	8271.668701	05-Sep-2022 19:30
Akhusingi	Trf2-12.5MVA 132/33kV	OPT02184	3.902429	7248	5.420041	8066.879550	05-Sep-2022 19:30
Aska	Trf1-40MVA 132/33kV	OPT01167	7.815610	15864	10.855014	16714.065933	19-Sep-2022 8:30
Aska	Trf2-40MVA 132/33kV	OPT00961	7.676960	15542	10.662444	16578.009531	02-Sep-2022 7:00
Aska	Trf3-40MVA 132/33kV	OPT01457	7.621150	15574	10.584931	16600.337346	02-Sep-2022 7:00
Aska New(220/132/33)	Trf1-40MVA 132/33kV	OPT01811	7.653400	15449	10.490833	16065.117491	21-Sep-2022 18:15
Balimela	Trf1-40MVA 220/33kV	OPT01893	4.714930	9745	6.548514	9744.577980	16-Sep-2022 18:45
Balimela	Trf2-20MVA 220/33kV	OPT01895	3.107969	6360	4.316624	13325.149755	28-Sep-2022 8:30
Balugaon	Khallikote Feeder 33kV	OPT00779	9.031046	18095	12.543119	20615.554516	29-Sep-2022 18:00
Berhampur	Trf1-40MVA 132/33kV	OPT00121	11.979767	21410	16.638566	25328.190436	02-Sep-2022 23:15
Berhampur	Trf2-20MVA 132/33kV	B0004476	7.504094	13838	10.422352	16232.443040	02-Sep-2022 23:15
Berhampur	Trf3-40MVA 132/33kV	OPT00123	12.200327	21886	16.944898	25790.669491	02-Sep-2022 23:15
Bhanjanagar	Trf1-40MVA 132/33kV	OPT02084	5.888351	10839	8.178265	12286.620408	20-Sep-2022 11:30
Bhanjanagar	Trf2-16MVA 132/33kV	OPT01273	3.864689	7044	5.367624	8446.015152	09-Sep-2022 10:45
Bhanjanagar	Trf3-40MVA 132/33kV	OPT01277	5.997590	10942	8.329886	13145.463096	09-Sep-2022 11:15
Boudh	Aditya Birla Solar-I 33kV	ORU51513	2.023797	0	2.810829	12494.840000	22-Sep-2022 11:00
Boudh	Aditya Birla Solar-II 33kV	ORU51512	1.996258	0	2.772580	12694.280000	09-Sep-2022 11:30
Boudh	Trf1-20MVA 132/33kV	OPT01155	1.952675	4809	2.712049	9652.000000	24-Sep-2022 11:45
Boudh	Trf2-20MVA 132/33kV	OPT00855	1.962964	4672	2.726339	9448.000000	24-Sep-2022 11:45
Chatrapur	IRE Feeder1 132kV	APM03533	2.137250	3760	2.968403	3891.372920	10-Sep-2022 16:30
Chatrapur	IRE Feeder2 132kV	APM03517	2.907117	5713	4.037663	5953.407146	07-Sep-2022 12:45
Chatrapur	Rambha Tr. Fdr 132kV	OPT00484	3.855350	6138	5.354653	12320.064935	16-Sep-2022 8:15
Chatrapur	Trf1-20MVA 132/33kV	APM03513	6.298039	10237	8.747276	15724.761524	08-Sep-2022 6:45
Chatrapur	Trf2-20MVA 132/33kV	OPT00918	5.678671	8457	7.887043	13908.446355	08-Sep-2022 4:30
Chatrapur	Trf3-20MVA 132/33kV	OPT00107	4.490870	6903	6.237459	10913.339386	08-Sep-2022 6:45
Chikiti	Trf1-40MVA 132/33kV	OPT01593	4.979370	8740	6.915792	12033.686052	08-Sep-2022 20:00
Dabugaon	Trf1-12.5MVA 132/33kV	OPT00717	2.882449	4562	4.003401	7990.062628	04-Sep-2022 6:15
Dabugaon	Trf2-12.5MVA 132/33kV	OPT00661	2.896955	4557	4.023549	8077.465939	04-Sep-2022 6:15
Digapahandi	Trf1-20MVA 132/33kV	APM03606	5.269448	9177	7.318677	10621.180380	28-Sep-2022 18:15
Digapahandi	Trf2-20MVA 132/33kV	APM03549	5.370792	8896	7.459434	11049.414047	28-Sep-2022 18:30
Digapahandi	Trf3-12.5MVA 132/33kV	APM12597	3.424731	5756	4.756571	6984.547677	28-Sep-2022 18:30
G. UDAYAGIRI	Trf1-20MVA 132/33kV	OPT02312	1.346843	3076	1.870616	4072.818040	29-Sep-2022 18:45
G. UDAYAGIRI	Trf2-20MVA 132/33kV	OPT01437	1.314030	3000	1.825042	3959.080701	29-Sep-2022 18:45
Ganjam	GRASIM Ind. Ltd. 132kV	OPT00003	11.070933	14534	15.376296	19609.048056	01-Sep-2022 16:00
Ganjam	Trf1-20MVA 132/33kV	OPT00701	3.887185	9891	5.396868	11452.690164	14-Sep-2022 20:15

STATE LOAD DESPATCH CENTRE

OFFICE OF Sr.G.M.(POWER SYSTEM) BHUBANESWAR - 751 017 FAX-0674-2748509/2478218

(Annexure - 1)

Report Generated on: 10/3/2022 4:02:47PM

SUBSTATION	METERING POINT	METER NO	ENERGY(MU)	SMD(KVA)	AVERAGE DEMAND(MWatts)	MAX DEMAND (KVA)	MAX DEMAND(KVA) TIME
Ganjam	Trf2-12.5MVA 132/33kV	OPT00697	2.381652	5980	3.307550	6938.800897	14-Sep-2022 20:15
Guhipita	GEDCOL Solar 2MW 33KV	ORA00072	0.002471	0	0.003432	18.256000	22-Sep-2022 11:45
Hinjili GIS	Trf1-20MVA 132/33kV	OPT02306	1.397827	0	6.317862	8919.373329	27-Sep-2022 19:30
Jayanagar	JAYPUR PG 28KV TERTIARY	ER1599-A	0.023627	33	0.032815	32.815278	01-Sep-2022 0:00
Jayanagar	JAYPUR PG 33KV TERTIARY	ER1600-A	0.029618	41	0.041133	41.133333	01-Sep-2022 0:00
Jayanagar	JAYPUR PG 430V TERTIARY	NP5965-A	0.058122	81	0.080725	80.725000	01-Sep-2022 0:00
Jayanagar	Traction Feeder 132kV	OPT00932	6.365280	17692	8.840667	26798.567126	29-Sep-2022 19:30
Jayanagar	Trf1-12.5MVA 132/33kV	OPT00917	3.569567	6740	4.957732	9364.998665	05-Sep-2022 19:15
Jayanagar	Trf2-20MVA 132/33kV	OPT01052	5.091399	9704	7.071387	13497.205044	05-Sep-2022 19:15
Jayanagar	Trf3-20MVA 132/33kV	APM12635	4.518152	9617	6.275211	10235.914960	03-Sep-2022 19:00
Jayanagar	Trf4-20MVA 132/33kV	OPT02172	5.179895	9904	7.194298	13725.697065	05-Sep-2022 19:15
Kasipur	220/33KV 20MVA TRF 1	OPT01473	0.594844	1433	0.826172	2097.941849	08-Sep-2022 18:15
Laxmipur	Trf1-20MVA 220/33kV	OPT00741	1.283735	4	1.782965	10453.233758	02-Sep-2022 18:45
Laxmipur	TRF2-20MVA 220/33KV	OPT01479	2.787425	8481	3.871424	10244.412331	12-Sep-2022 7:15
Laxmipur	UTKAL ALUMINA Fdr-1 220kV	OPT00819	0.031870	5360	0.044264	5773.872184	20-Sep-2022 6:00
Laxmipur	UTKAL ALUMINA Fdr-2 220kV	OPT00875	0.121960	5060	0.169389	9455.241932	29-Sep-2022 20:30
Malkangiri	Trf1-40MVA 220/33kV	OPT01779	3.870700	7963	5.375972	9845.283135	05-Sep-2022 19:45
Malkangiri	Trf2-40MVA 220/33kV	OPT00710	3.912880	8135	5.434556	9876.436604	05-Sep-2022 19:45
Meenakshi s/w	Megalift Feeder 33kV	OPT01557	0.029869	4	0.041485	778.562778	25-Sep-2022 10:30
Mohana	Trf1-12.5MVA 132/33kV	OPT01794	1.739670	4135	2.416208	5415.038319	06-Sep-2022 17:45
Mohana	Trf2-12.5MVA 132/33kV	OPT01886	1.834591	3881	2.548043	8447.759488	28-Sep-2022 18:30
Muniguda	Bissam-Cuttack Tr.132kV	OPT01798	4.348230	12601	6.039208	19962.605040	03-Sep-2022 11:30
Muniguda	Trf1- 12.5MVA 132/33kV	OPT02161	4.543563	8463	6.310505	8870.952602	02-Sep-2022 20:30
Nabarangpur	Trf1-20MVA 132/33kV	OPT02258	2.328408	11601	4.409864	12723.674764	24-Sep-2022 18:45
Narendrapur	220 KV TATA Feeder-I	OREB9352	0.000000	0	0.000000	0.000000	01-Sep-2022 0:00
Narendrapur	220 KV TATA Feeder-II	OREB9350	12.211120	17710	16.959889	23719.021902	01-Sep-2022 10:30
Narendrapur	Narendrapur Traction 132kV	OPT00859	4.053090	5353	5.629292	13699.459843	23-Sep-2022 19:00
Narendrapur	Trf1-20MVA 132/33kV	OPT01837	3.507844	6012	4.872144	8261.966836	07-Sep-2022 13:00
Narendrapur	Trf2-40MVA 132/33kV	OPT00676	5.524000	9720	7.672222	11693.675258	02-Sep-2022 23:00
Narendrapur	Trf3-40MVA 132/33kV	OPT00856	7.296409	12574	10.133901	18987.780300	07-Sep-2022 10:30
Narendrapur	Trf4-40MVA 132/33kV	OPT01810	5.764170	9979	8.005792	12904.076875	18-Sep-2022 1:15
Paralakhemundi	Trf1-12.5MVA 132/33kV	OPT01956	3.091399	5694	4.293610	6781.665872	02-Sep-2022 14:45
Paralakhemundi	Trf2-12.5MVA 132/33kV	OPT01958	3.124416	5744	4.339467	6962.143348	24-Sep-2022 18:15
Paralakhemundi	Trf3-12.5MVA 132/33kV	OPT00537	3.310885	6159	4.598451	7289.015297	02-Sep-2022 14:30
Phulbani	Trf1-40MVA 132/33kV	OPT01879	5.239080	10790	7.276500	11639.656352	15-Sep-2022 19:15
Phulbani	Trf2-12.5MVA 132/33kV	OPT01880	0.000049	0	0.000068	12.649111	18-Sep-2022 15:00
Phulbani	Trf3-40MVA 132/33kV	OPT01883	4.732000	10055	6.572222	10580.737214	15-Sep-2022 19:15
Podagada	Trf1-20MVA 132/33kV	OPT02348	0.712336	976	0.989356	6432.685663	21-Sep-2022 8:00
Podagada	Trf2-12.5MVA 132/33kV	OPT01902	0.454964	820	0.631894	4105.508495	21-Sep-2022 8:00
Potangi	Trf1-40MVA 132/33kV	OPT00247	0.862128	1277	1.197401	2768.785551	30-Sep-2022 8:00

STATE LOAD DESPATCH CENTRE

OFFICE OF Sr.G.M.(POWER SYSTEM) BHUBANESWAR - 751 017 FAX-0674-2748509/2478218

(Annexure - 1)

Report Generated on: 10/3/2022 4:02:47PM

SUBSTATION	METERING POINT	METER NO	ENERGY(MU)	SMD(KVA)	AVERAGE DEMAND(MWatts)	MAX DEMAND (KVA)	MAX DEMAND(KVA) TIME
Purushottampur	Trf1-12.5MVA 132/33kV	OPT00151	2.381626	4567	3.307614	6374.908854	01-Sep-2022 17:15
Purushottampur	Trf2-12.5MVA 132/33kV	OPT00156	2.461066	4699	3.418148	6601.589682	01-Sep-2022 17:15
Purushottampur	Trf3-20MVA 132/33kV	OPT01795	3.830948	7302	5.320761	10413.256935	01-Sep-2022 17:00
Rayagada	Traction Feeder 132kV	OPT01202	3.473890	9438	4.824647	15331.744845	04-Sep-2022 14:45
Rayagada	Trf1-12.5MVA 132/33kV	OPT01846	2.099938	3550	2.916581	4800.481643	02-Sep-2022 22:30
Rayagada	Trf2-12.5MVA 132/33kV	OPT01848	1.768312	3008	2.455989	4080.652889	02-Sep-2022 22:30
Rayagada	Trf3-20MVA 132/33kV	OPT01809	2.938994	5057	4.081936	6830.725877	02-Sep-2022 22:30
Sonepur	Manamunda Feeder 33kV	OPT01720	6.278405	12296	8.730007	13782.828157	16-Sep-2022 19:30
Sunabeda	HAL Feeder 132kV	OPT01892	3.571724	7552	4.960728	11449.076120	13-Sep-2022 9:00
Sunabeda	Trf1-12.5MVA 132/33kV	OPT01890	3.366751	7192	4.676043	7836.657451	20-Sep-2022 7:30
Sunabeda	Trf2-12.5MVA 132/33kV	OPT01888	3.264519	6958	4.534054	7592.857697	20-Sep-2022 7:30
Sunabeda	Trf3-20MVA 132/33kV	OPT01891	5.215470	11222	7.243708	12211.078249	20-Sep-2022 7:30
Tentulikhunti	Mukhiguda Fdr 33KV	OPT01790	-0.703519	-1471	-0.977110	2286.030621	12-Sep-2022 17:45
Tentulikhunti	Trf1-20MVA 132/33kV	OPT01900	2.606051	2709	3.619557	6743.289405	10-Sep-2022 9:45
Tentulikhunti	Trf2-20MVA 132/33kV	OPT01902	2.506702	2563	3.481531	6466.669003	10-Sep-2022 9:45
Tentulikhunti	Trf3-20 MVA 132/33kV	APM12639	1.687098	1806	2.343191	4392.546286	10-Sep-2022 9:45
Tentulikhunti	Vento Energy Infra Pvt Ltd Solar 132KV	Y0639836	0.032060	377	0.044528	36480.000000	29-Sep-2022 12:15
Theruvali	Bhalumaska RTSS 132kV	OPT01439	1.524000	2154	2.116667	17366.634677	03-Sep-2022 1:00
Theruvali	JK Feeder 132KV(Biomass)	OPT01669	0.014728	36	0.020456	6912.004030	02-Sep-2022 21:00
Theruvali	Trf1-12.5MVA 132/33kV	OPT01398	1.981746	3622	2.752425	4231.281603	29-Sep-2022 10:00
Theruvali	Trf2-12.5MVA 132/33kV	OPT01090	1.850714	3411	2.570436	3981.115422	29-Sep-2022 10:00
Umerkote	Trf1-20MVA 132/33kV	OPT00674	6.013603	12247	8.352226	12420.028341	16-Sep-2022 19:00
Umerkote	Trf2-20MVA 132/33kV	OPT01238	6.171886	12583	8.572064	12759.338641	16-Sep-2022 19:00
		TOTAL:	**358.900266**	**682,447**			

AT: 16-Sep-2022 18:45

DETAILS

TOTAL ENERGY CONSUMED	358.900266
STATION CONSUMPTION	0.360269
NET CONSUMPTION	358.539997

GRIDCO LIMITED

(A Govt. of Odisha Undertaking)
(Formerly Grid Corporation of Orissa Limited)
Regd. Office: Janpath, Bhubaneswar-751022
Ph:0674-2541320/2540098/2540877 Fax:0674-2541904 E-mail:sgm.pp@gridco.co.in
CIN: U40109OR1995SGC003960

Ref. No.: CGM-PP-50/2022/ 1124(9) Date: 03/11/2022

To

The Chief Executive Officer,
TP Southern Odisha Distribution Limited
Courtpeta, Berhampur.

Sub: Energy Bill for the Month of Oct-2022

Dear Sir,

Enclosed please find herewith the Bulk supply energy bill for the month of Oct-2022 for Rs.76,93,93,008.00 towards supply of power by GRIDCO to TPSODL.

You are requested to kindly release the payment at the earliest. The rebate for prompt payment shall be admissible as per tariff order. The Energy Flow Statement, furnished by SLDC, based on which the bill is prepared are enclosed herewith for your reference.

Thanking You.

Encl: As stated above.

Yours faithfully

03/11/2022

GM (T&BS)

Copy to:

Nodal Officer, DISCOM Monitoring Unit (DMU), GRIDCO, Bhubaneswar
Chief Load Despatcher, SLDC, Mancheswar, Bhubaneswar.
CFO, GRIDCO, Bhubaneswar.
DGM (F) PP Branch, GRIDCO, Bhubaneswar.
DGM (L & RA), GRIDCO, Bhubaneswar
Manager Capex & MIS Cell, Bhubaneswar
Manager, Union Bank of India, Main Branch, Bhubaneswar
GUARD File

GRIDCO

G R I D C O Limited

Registered Office: Janpath
Bhubaneswar 751022
CIN: U40109OR1995SGC003960

Bill of Supply

For TPSODL
October-2022

GRIDCO GSTIN:21AABCG5398P1Z3
Goods Description: Electricity
HSN Code: 27160000
Ref No: GR/BS/22-23/ 334

Date: 03-Nov-22
Pay By Date: 03-Dec-22

The Chief Executive Officer
TP Southern Odisha Distribution Limited
Courtpeta, Berhampur, Odisha
GSTIN: 21AAICT3239P1Z1

A. Total Energy for the month	338.939651 MU
B. SMD approved by OERC	7,20,000 kVA
SMD permitted by OERC	7,92,000 kVA
Actual SMD occurred	6,27,683 kVA
Excess SMD drawal	0 kVA

Item No			Amount (Rs.)
1	Current Charges		
	(a) Bulk Supply Price @ 227 Paise per kWh for the Energy	76,93,93,007.77	
	(b) Excess Demand Charge @ Rs 250 per kVA	0.00	
	Sub Total: (a+b)		76,93,93,007.77
2	Debit/Credit Bills:		
	a) Debit Bills for the _____ vide Bill Nos _____ Dtd _____	0.00	
	Sub Total: (a+b)		0.00
3	Total Current Charges: Items (1+2)		76,93,93,000.00
4	Add Delayed Payment Surcharge for the month of Oct-2022 (Annex-6)	0	-
5	Add: Previous amount outstanding :-		
	(i) Outstanding energy charges	1,65,58,97,861.00	
	(ii) Outstanding DPS	-	
	Total Previous Outstanding: (i+ii)		1,65,58,97,861.00
6	Less payment received during the month		
	(a) Collection for Aug '22	83,50,13,114.00	
	(b) Rebate on Aug'22	84,43,003.00	
	(c) Amount against TDS	6,44,300.00	
	(d) Other Adjustment (if any)	-	
	Total Payment and Adjustment: (a+b+c+d)		(84,43,00,417.00)
7	Total amount claimed through this bill: Item (3 to 6)		1,58,09,90,452.00
	(Rounded off to the nearest Rupee)		1,58,09,90,452.00

(Rupees one hundred fifty eight crore nine lakh ninety thousand four hundred fifty two only)

Checked by

DGM(F), PP

DGM (EBC)

For & on behalf of GRIDCO

GM(T&BS)

Note:

1. The BSP Bill of Supply for the month has been prepared in line with the Bulk Supply Agreement executed with TPSODL and ARR & BSP Order dated 24.03.2022 in Case No 107/2021.
2. The billing for Bulk Supply of Power has been done based on the actual energy consumption statement provided by SLDC and in line with the Clause No. 388 of the BSP order Dt.24.03.2022 of GRIDCO for FY-2022-23 in Case No.107/2021 in the matter of overdrawal by the DISCOMs and as per the rates stipulated at Clause No.384 & 392 of the said BSP Order.
3. In line with the decisions of the 98th & 99th PSCC Meetings and discussions held among GRIDCO, SLDC & WESCO Utility in the chamber of CGM(PP), in the Meeting Dtd.29.08.2016, the Energy Import by Solar Entities has been deducted from the Energy Import Figure of DISCOMs.
4. Rebate for prompt payment & Delayed Payment Surcharge shall be admissible/imposed as per the Clause No. 389 & 390 of BSP Order of GRIDCO Dt.24/03/2022 in case No.107 of 2021 of OERC and relevant provisions of Bulk Supply Agreement executed with TPSODL.
5. In case of any default in monthly BSP dues by the DISCOMs, they are liable for imposition of power regulation to the extent of non payment of monthly BSP dues as per Clause No. 385 of the BSP Order.
6. Statutory levy/duty/tax/cess/toll etc. imposed under any law from time to time shall be charged over and above the bulk supply price fixed by the Commission as per Clause No. 391 of the BSP Order.
7. Discrepancy, if any, found later on, towards the billing will be taken into account.
8. Details of the Annexures -

Annexure 1	Energy Flow Statement	Annexure 2	Station Consumption statement
Annexure 3	Open Access Statements	Annexure 4	Main/Check Comparison of Solar Plants
Annexure 5	Energy Accounting Statement of SLDC	Annexure 6	Delayed Payment Surcharge
Annexure 7	Rebate Statement	Annexure 8	Billing Consideration Statement
Annexure 9	Billing information Statement		

STATE LOAD DESPATCH CENTRE

OFFICE OF Sr.G.M.(POWER SYSTEM) BHUBANESWAR - 751 017 FAX-0674-2748509/2478218

(Annexure - 1)

Report Generated on: 11/3/2022 1:50:40PM

ENERGY FLOW FOR : TPSODL

BILLING CYCLE FROM 01-Oct-2022 BILLING CYCLE TO 31-Oct-2022

SUBSTATION	METERING POINT	METER NO	ENERGY(MU)	SMD(KVA)	AVERAGE DEMAND(MWatts)	MAX DEMAND (KVA)	MAX DEMAND(KVA) TIME
Akhusingi	Trf1-12.5MVA 132/33kV	OPT02182	3.650210	5430	4.906196	8843.557777	01-Oct-2022 19:00
Akhusingi	Trf2-12.5MVA 132/33kV	OPT02184	3.442021	5306	4.626372	8946.431847	31-Oct-2022 9:45
Aska	Trf1-40MVA 132/33kV	OPT01167	7.248440	15744	9.742527	17752.475884	21-Oct-2022 18:45
Aska	Trf2-40MVA 132/33kV	OPT00961	7.098430	15415	9.538212	17383.762539	21-Oct-2022 18:45
Aska	Trf3-40MVA 132/33kV	OPT01457	7.007270	15486	9.418374	17470.111620	21-Oct-2022 18:45
Aska New(220/132/33)	Trf1-40MVA 132/33kV	OPT01811	7.144720	15125	9.603118	15453.517399	20-Oct-2022 18:15
Balimela	Trf1-40MVA 220/33kV	OPT01893	4.770170	7705	6.411519	10217.240332	20-Oct-2022 10:15
Balimela	Trf2-20MVA 220/33kV	OPT01895	3.140172	5023	4.220861	11190.460223	28-Oct-2022 9:30
Balugaon	Khalikote Feeder 33kV	OPT00747	8.363544	17221	11.241323	20254.649639	28-Oct-2022 18:00
Berhampur	Trf1-40MVA 132/33kV	OPT00121	9.175880	12624	12.333306	28445.184401	01-Oct-2022 10:30
Berhampur	Trf2-20MVA 132/33kV	B0004476	5.844569	8007	7.860012	17465.865426	28-Oct-2022 18:30
Berhampur	Trf3-40MVA 132/33kV	OPT00123	9.370423	12943	12.594656	25737.049231	28-Oct-2022 18:45
Bhanjanagar	Trf1-40MVA 132/33kV	OPT02084	5.256705	8287	7.065463	21770.723773 *	27-Oct-2022 8:15
Bhanjanagar	Trf2-16MVA 132/33kV	OPT01273	3.328120	5031	4.473280	7505.061759	20-Oct-2022 18:00
Bhanjanagar	Trf3-40MVA 132/33kV	OPT01277	5.172400	9367	6.952151	11689.037509	20-Oct-2022 18:00
Boudh	Aditya Birla Solar-I 33kV	ORU51513	2.162570	8003	2.906680	12612.120000	06-Oct-2022 11:15
Boudh	Aditya Birla Solar-II 33kV	ORU51512	2.131432	8008	2.864827	12644.480000	15-Oct-2022 12:15
Boudh	Trf1-20MVA 132/33kV	OPT01155	1.663070	4958	2.235309	10720.000000	27-Oct-2022 10:30
Boudh	Trf2-20MVA 132/33kV	OPT00858	1.671427	5048	2.246542	10760.000000	27-Oct-2022 10:30
Chatrapur	IRE Feeder1 132kV	APM03533	2.389159	2594	3.211235	9581.181201	18-Oct-2022 21:00
Chatrapur	IRE Feeder2 132kV	OPT00685	2.708089	3865	3.639878	5892.490136	15-Oct-2022 13:15
Chatrapur	Ramba Tr For 132kV	OPT00688	3.829710	6083	5.147460	12139.060919	12-Oct-2022 13:45
Chatrapur	Trf1-20MVA 132/33kV	OPT00786	5.015742	6358	6.741589	13132.718226	08-Oct-2022 9:15
Chatrapur	Trf2-20MVA 132/33kV	OPT00715	4.472973	6944	6.012060	12853.008364	17-Oct-2022 11:45
Chatrapur	Trf3-20MVA 132/33kV	OPT00107	3.429163	5562	4.609089	8515.759747	03-Oct-2022 16:45
Chiki	Trf1-40MVA 132/33kV	OPT01593	4.244080	6501	5.704409	10825.200227	08-Oct-2022 4:45
Dabugaon	Trf1-12.5MVA 132/33kV	OPT00717	2.467785	3423	3.316915	5689.099753	14-Oct-2022 18:45
Dabugaon	Trf2-12.5MVA 132/33kV	OPT00861	2.476833	3390	3.328808	5873.400391	14-Oct-2022 18:45
Digapahandi	Trf1-20MVA 132/33kV	APM03696	4.913425	9669	6.604066	11153.021679	13-Oct-2022 17:45
Digapahandi	Trf2-20MVA 132/33kV	APM03549	5.008599	10018	6.731988	11311.053948	13-Oct-2022 18:00
Digapahandi	Trf3-12.5MVA 132/33kV	APM12597	3.194106	6338	4.293154	7198.724600	13-Oct-2022 7:45
G. UDAYAGIRI	Trf1-20MVA 132/33kV	OPT02312	1.333321	2708	1.792099	3497.008171	03-Oct-2022 10:30
G. UDAYAGIRI	Trf2-20MVA 132/33kV	OPT01437	1.289041	2628	1.746023	2944.271727	25-Oct-2022 18:45
Ganjam	GRASIM Ind. Ltd. 132kV	OPT00003	11.237152	15747	15.103698	18717.626218	31-Oct-2022 16:15
Ganjam	Trf1-20MVA 132/33kV	OPT00347	3.167153	4844	4.256926	11104.348698	01-Oct-2022 18:30

STATE LOAD DESPATCH CENTRE
OFFICE OF Sr.G.M.(POWER SYSTEM) BHUBANESWAR - 751 017 FAX-0674-2748509/2478218

(Annexure - 1)

Report Generated on: 11/3/2022 1:50:40PM

SUBSTATION	METERING POINT	METER NO	ENERGY(MU)	SMD(KVA)	AVERAGE DEMAND(MWatts)	MAX DEMAND (KVA)	MAX DEMAND(KVA) TIME
Ganjam	Trf2-12.5MVA 132/33kV	OPT00697	1.869768	2920	2.513129	6707.326144	01-Oct-2022 18:30
Gunupur	GEDCOL Solar 2MW 33KV	ORA00072	0.002576	10	0.003463	18.390800	13-Oct-2022 11:00
Hinjli GIS	Trf1-20MVA 132/33kV	OPT02306	5.425022	9666	7.291686	10997.130590	26-Oct-2022 7:45
Jayanagar	JAYPUR PG 28KV TERTIARY	ER1599-A	0.019892	27	0.026737	26.736559	01-Oct-2022 0:00
Jayanagar	JAYPUR PG 33KV TERTIARY	ER1600-A	0.027278	37	0.036664	36.663978	01-Oct-2022 0:00
Jayanagar	JAYPUR PG 430V TERTIARY	NP5965-A	0.051267	69	0.068907	68.907258	01-Oct-2022 0:00
Jayanagar	Traction Feeder 132kV	OPT00932	7.566740	17130	10.170349	28320.819197	28-Oct-2022 4:45
Jayanagar	Trf1-12.5MVA 132/33kV	OPT00917	3.242110	5386	4.357675	7803.878010	31-Oct-2022 11:45
Jayanagar	Trf2-20MVA 132/33kV	OPT01052	4.626279	7756	6.218117	11282.598991	31-Oct-2022 11:45
Jayanagar	Trf3-20MVA 132/33kV	APM12635	4.674822	7749	6.283363	9947.755125	29-Oct-2022 18:30
Jayanagar	Trf4-20MVA 132/33kV	OPT02172	4.707164	7920	6.326833	11506.627476	31-Oct-2022 11:45
Kashipur	220/33KV 20MVA TRF 1	OPT01473	0.652711	1188	0.877300	2006.808411	29-Oct-2022 18:00
Laxmipur	Laxmipur RTSS 220kV	OPT02254	0.914149	2648	1.228695	10491.964407	16-Oct-2022 21:15
Laxmipur	Trf1-20MVA 220/33kV	OPT00741	1.893068	4	2.544448	10316.012408	16-Oct-2022 7:00
Laxmipur	TRF2-20MVA 220/33KV	OPT01479	2.150028	9384	2.888823	10410.951926	28-Oct-2022 8:00
Laxmipur	UTKAL ALUMINA Fdr-1 220kV	OPT00819	0.017790	5440	0.023911	5803.447251	05-Oct-2022 4:15
Laxmipur	UTKAL ALUMINA Fdr-2 220kV	OPT00875	0.122820	5320	0.165081	10848.852474	30-Oct-2022 16:00
Malkangiri	Trf1-40MVA 220/33kV	OPT01779	3.701950	4809	4.975739	8819.070246	25-Oct-2022 18:45
Malkangiri	Trf2-40MVA 220/33kV	OPT00710	3.754770	4794	5.046734	9929.753270	12-Oct-2022 17:30
Meenakshi s/s	Megalift Feeder 33kV	OPT01557	0.018301	0	0.024598	778.562778	02-Oct-2022 11:15
Mohana	Trf1-12.5MVA 132/33kV	OPT01794	1.829657	2946	2.459082	4168.923122	20-Oct-2022 20:15
Mohana	Trf2-12.5MVA 132/33kV	OPT01886	1.726825	2779	2.321001	4144.494179	28-Oct-2022 10:45
Muniguda	Bissam-Cuttack Tr.132kV	OPT01798	4.436750	16763	5.962030	21848.336077	13-Oct-2022 20:30
Muniguda	Trf1- 12.5MVA 132/33kV	OPT02161	4.153277	6589	5.582361	8689.105312	25-Oct-2022 18:45
Nabarangpur	Trf1-20MVA 132/33kV	OPT02258	3.965287	4234	5.329686	11998.471649	31-Oct-2022 6:30
Narendrapur	220 KV TATA Feeder-I	OREB9352	0.000000	0	0.000000	0.000000	01-Oct-2022 0:00
Narendrapur	220 KV TATA Feeder-II	OREB9350	15.699640	25107	21.101667	25441.540834	31-Oct-2022 2:00
Narendrapur	Narendrapur Traction 132kV	OPT00659	3.981390	5202	5.351331	14282.464773	15-Oct-2022 11:00
Narendrapur	Trf1-20MVA 132/33kV	OPT01837	3.014805	4172	4.052157	7027.636872	19-Oct-2022 18:00
Narendrapur	Trf2-40MVA 132/33kV	OPT00678	4.848140	6643	6.516317	11297.856204	19-Oct-2022 18:00
Narendrapur	Trf3-40MVA 132/33kV	OPT00656	6.231760	8847	8.376022	14612.049822	19-Oct-2022 18:00
Narendrapur	Trf4-40MVA 132/33kV	OPT01810	4.832760	6682	6.495645	8957.858887	01-Oct-2022 12:15
Paralakhemendi	Trf1-12.5MVA 132/33kV	OPT01956	2.874225	3479	3.863206	6471.516669	01-Oct-2022 18:45
Paralakhemendi	Trf2-12.5MVA 132/33kV	OPT01958	2.903359	3525	3.902364	6537.469847	01-Oct-2022 18:45
Paralakhemendi	Trf3-12.5MVA 132/33kV	OPT00537	3.077947	3812	4.137026	6921.175623	01-Oct-2022 18:30
Phulbani	Trf1-40MVA 132/33kV	OPT01879	4.962170	8028	6.669583	11678.904056	29-Oct-2022 18:45
Phulbani	Trf2-12.5MVA 132/33kV	OPT01880	0.000000	0	0.000000	0.000000	01-Oct-2022 0:00
Phulbani	Trf3-40MVA 132/33kV	OPT01883	4.463720	7383	6.026505	10506.683587	29-Oct-2022 18:45
Podagada	Trf1-20MVA 132/33kV	OPT02348	0.680764	1697	0.914992	1983.450847	28-Oct-2022 6:45
Podagada	Trf2-12.5MVA 132/33kV	OPT01802	0.448173	1096	0.602383	2834.868604	07-Oct-2022 16:15

STATE LOAD DESPATCH CENTRE

OFFICE OF Sr.G.M.(POWER SYSTEM) BHUBANESWAR - 751 017 FAX-0674-2748509/2478218

(Annexure - 1)

Report Generated on: 11/3/2022 1:50:40PM

SUBSTATION	METERING POINT	METER NO	ENERGY(MU)	SMD(KVA)	AVERAGE DEMAND(MWatts)	MAX DEMAND (KVA)	MAX DEMAND(KVA) TIME
Patangi	Trf1-40MVA 132/33kV	OPT00247	1.603278	1695	2.423761	5514.609154	29-Oct-2022 6:30
Purushottampur	Trf1-12.5MVA 132/33kV	OPT00151	2.091481	3515	2.811131	5549.779169	19-Oct-2022 17:45
Purushottampur	Trf2-12.5MVA 132/33kV	OPT00156	2.042166	3623	2.744846	4281.640037	27-Oct-2022 18:15
Purushottampur	Trf3-20MVA 132/33kV	OPT01795	3.351289	5672	4.504394	9003.317611	19-Oct-2022 17:45
Rayagada	Traction Feeder 132kV	OPT01282	3.550830	1853	4.772621	13912.181712	01-Oct-2022 7:15
Rayagada	Trf1-12.5MVA 132/33kV	OPT01846	1.819528	2427	2.445602	4232.918615	25-Oct-2022 18:45
Rayagada	Trf2-12.5MVA 132/33kV	OPT01848	1.531239	2053	2.058117	3576.145411	25-Oct-2022 19:00
Rayagada	Trf3-20MVA 132/33kV	OPT01809	2.549777	3440	3.427120	6040.641026	25-Oct-2022 18:45
Sonepur	Manamunda Feeder 33kV	OPT01720	5.932018	10100	7.973142	13722.890658	21-Oct-2022 18:30
Sunabeda	HAL Feeder 132kV	OPT01892	3.232766	5720	4.345116	10347.539224	06-Oct-2022 9:30
Sunabeda	Trf1-12.5MVA 132/33kV	OPT01890	3.483275	7682	4.681821	9560.083682	17-Oct-2022 18:30
Sunabeda	Trf2-12.5MVA 132/33kV	OPT01888	3.323104	7421	4.466538	8430.713374	22-Oct-2022 9:45
Sunabeda	Trf3-20MVA 132/33kV	OPT01891	5.435891	11891	7.306305	14880.065054	17-Oct-2022 18:30
Tentulikhunti	Mukhiguda Fdr 33KV	OPT01790	-0.690787	-1108	-0.928477	2632.018237	19-Oct-2022 16:00
Tentulikhunti	Trf1-20MVA 132/33kV	OPT01900	2.620957	6248	3.522792	9045.627462	16-Oct-2022 9:30
Tentulikhunti	Trf2-20MVA 132/33kV	OPT01902	2.089678	5992	2.808707	7313.684707	26-Oct-2022 15:15
Tentulikhunti	Trf3-20 MVA 132/33kV	APM12627	1.694439	3927	2.277472	6142.901932	13-Oct-2022 12:00
Tentulikhunti	Vento Energy Infra Pvt Ltd Solar 132KV	Y0639836	0.033550	24120	0.045080	36400.000000	29-Oct-2022 11:45
Theruvali	Bhalumaska RTSS 132kV	OPT01439	1.277790	2433	1.717339	9879.271228	13-Oct-2022 2:45
Theruvali	JK Feeder 132kV(Biomass)	OPT01669	0.001304	52	0.001753	1154.864494	14-Oct-2022 8:45
Theruvali	Trf1-12.5MVA 132/33kV	OPT01398	1.744783	3221	2.345138	3938.107160	25-Oct-2022 19:00
Theruvali	Trf2-12.5MVA 132/33kV	OPT01099	1.802310	3044	2.422460	6323.276366	31-Oct-2022 17:45
Umerkote	Trf1-20MVA 132/33kV	OPT00674	6.290689	10650	8.455227	13180.570549	25-Oct-2022 18:45
Umerkote	Trf2-20MVA 132/33kV	OPT01238	6.464956	10886	8.689457	13546.712664	25-Oct-2022 18:45

TOTAL: 341.990029 633,568

AT: 26-Oct-2022 8:30

DETAILS

TOTAL ENERGY CONSUMED	~ 341.990029
STATION CONSUMPTION	0.382074
NET CONSUMPTION	341.607955

GRIDCO LIMITED

(A Govt. of Odisha Undertaking)
(Formerly Grid Corporation of Orissa Limited)
Regd. Office: Janpath, Bhubaneswar-751022
Ph:0674-2541320/2540098/2540877 Fax:0674-2541904 E-mail:sgm.pp@gridco.co.in
CIN: U40109OR1995SGC003960

Ref. No.: CGM-PP-50/2022/ 1241(8) Date: 03.12.2022

To

The Chief Executive Officer,
TP Southern Odisha Distribution Limited
Courtpeta, Berhampur.

Sub: Energy Bill for the Month of Nov-2022

Dear Sir,

Enclosed please find herewith the Bulk supply energy bill for the month of Nov-2022 for Rs.72,16,07,590.00 towards supply of power by GRIDCO to TPSODL.

You are requested to kindly release the payment at the earliest. The rebate for prompt payment shall be admissible as per tariff order. The Energy Flow Statement, furnished by SLDC, based on which the bill is prepared are enclosed herewith for your reference.

Thanking You.

Encl: As stated above.

Yours faithfully

03/12/2022

GM (T&BS)

Copy to:

Nodal Officer, DISCOM Monitoring Unit (DMU), GRIDCO, Bhubaneswar
Chief Load Despatcher, SLDC, Mancheswar, Bhubaneswar.
CFO, GRIDCO, Bhubaneswar.
DGM (F) PP Branch, GRIDCO, Bhubaneswar.
DGM (R & T), GRIDCO, Bhubaneswar
Manager, Union Bank of India, Main Branch, Bhubaneswar
GUARD File

GRIDCO

G R I D C O Limited

Registered Office: Janpath
Bhubaneswar 751022
CIN: U40109OR1995SGC003960

Bill of Supply

For TPSODL

November-2022

GRIDCO GSTIN:21AABCG5398P3Z3
Goods Description: Electricity
HSN Code: 27160000
Ref No: GR/BS/22-23/ 385

Date: 03-Dec-22
Pay By Date: 02-Jan-23

The Chief Executive Officer
TP Southern Odisha Distribution Limited
Courtpeta, Berhampur, Odisha
GSTIN: 21AAICT3238P1Z1

A. Total Energy for the month	317.688806 MU
B. SMD approved by OERC	7,20,000 kVA
SMD permitted by OERC	7,92,000 kVA
Actual SMD occurred	6,84,335 kVA
Excess SMD drawal	0 kVA

Item No			Amount (Rs.)
1	Current Charges		
	(a) Bulk Supply Price @ 227 Paise per kWh for the Energy	72,16,07,589.62	
	(b) Excess Demand Charge @ Rs 250 per kVA	0.00	
	Sub Total: (a+b)		72,16,07,589.62
2	Debit/Credit Bills:		
	a) Debit Bills for the _____ vide Bill Nos _____ Dtd _____	0.00	
	Sub Total: (a+b)		0.00
3	Total Current Charges: Items (1+2)		72,16,07,590.00
4	Add Delayed Payment Surcharge for the month of Nov-2022 (Annex-6)		-
5	Add: Previous amount outstanding :-		
	(i) Outstanding energy charges	1,58,09,90,450.00	
	(ii) Outstanding DPS	-	
	Total Previous Outstanding: (i+ii)		1,58,09,90,450.00
6	Less payment received during the month		
	(a) Collection for Sep '22	80,26,69,872.00	
	(b) Rebate on Sep'22	81,15,974.00	
	(c) Amount against TDS	8,11,597.00	
	(d) Other Adjustment (if any)	-	
	Total Payment and Adjustment: (a+b+c+d)		(81,15,97,443.00)
7	Total amount claimed through this bill: item (3 to 6)		1,49,10,00,597.00
	(Rounded off to the nearest Rupee)		1,49,10,00,597.00

(Rupees one hundred forty nine crore ten lakh five hundred ninety seven only)

Checked by

for DGM(F), PP

M.S.Sahu
DGM (EBC)

For & on behalf of GRIDCO

GM(T&BS)

Note:

1. The BSP Bill of Supply for the month has been prepared in line with the Bulk Supply Agreement executed with TPSODL and ARR & BSP Order dated 24.03.2022 in Case No 107/2021.
2. The billing for Bulk Supply of Power has been done based on the actual energy consumption statement provided by SLDC and in line with the Clause No. 388 of the BSP order Dt.24.03.2022 of GRIDCO for FY-2022-23 in Case No.107/2021 in the matter of overdrawal by the DISCOMs and as per the rates stipulated at Clause No.384 & 382 of the said BSP Order.
3. In line with the decisions of the 98th & 99th PSOC Meetings and discussions held among GRIDCO, SLDC & WESCO Utility in the chamber of CGM(FP), in the Meeting Dtd.20.08.2016, the Energy Import by Solar Entities has been deducted from the Energy Import Figure of DISCOMs.
4. Rebate for prompt payment & Delayed Payment Surcharge shall be admissible/imposed as per the Clause No. 389 & 390 of BSP Order of GRIDCO Dt.24/03/2022 in case No.107 of 2021 of OERC and relevant provisions of Bulk Supply Agreement executed with TPSODL.
5. In case of any default in monthly BSP dues by the DISCOMs, they are liable for imposition of power regulation to the extent of non payment of monthly BSP dues as per Clause No. 385 of the BSP Order.
6. Statutory levy/duty/tax/cess/toll etc. imposed under any law from time to time shall be charged over and above the bulk supply price fixed by the Commission as per Clause No. 391 of the BSP Order.
7. Discrepancy, if any, found later on, towards the billing will be taken into account.
8. **Details of the Annexures -**

Annexure 1	Energy Flow Statement	Annexure 2	Station Consumption statement
Annexure 3	Open Access Statements	Annexure 4	Main/Check Comparison of Solar Plants
Annexure 5	Energy Accounting Statement of SLDC	Annexure 6	Delayed Payment Surcharge
Annexure 7	Rebate Statement	Annexure 8	Billing Consideration Statement
Annexure 9	Billing information Statement		

STATE LOAD DESPATCH CENTRE

OFFICE OF Sr.G.M.(POWER SYSTEM) BHUBANESWAR - 751 017 FAX-0674-2748509/2478218

(Annexure - 1)

Report Generated on: 12/3/2022 12:51:29PM

ENERGY FLOW FOR : TPSODL

BILLING CYCLE FROM 01-Nov-2022 **BILLING CYCLE TO** 30-Nov-2022

SUBSTATION	METERING POINT	METER NO	ENERGY(MU)	SMD(KVA)	AVERAGE DEMAND(MWatts)	MAX DEMAND (KVA)	MAX DEMAND(KVA) TIME
Akhusingi	Trf1-12.5MVA 132/33kV	OPT02182	3.116217	8654	4.328079	9225.317962	08-Nov-2022 11:15
Akhusingi	Trf2-12.5MVA 132/33kV	OPT02184	3.140462	8427	4.361752	10400.569586	05-Nov-2022 9:15
Aska	Trf1-40MVA 132/33kV	OPT01167	6.660930	15730	9.251292	22701.013193	28-Nov-2022 17:45
Aska	Trf2-40MVA 132/33kV	OPT00961	6.446050	15447	8.955625	17407.364767	10-Nov-2022 7:45
Aska	Trf3-40MVA 132/33kV	OPT01457	6.525350	15486	9.062986	22338.525510	28-Nov-2022 17:45
Aska New(220/132/33)	Trf1-40MVA 132/33kV	OPT01811	6.086740	14724	8.429028	15564.183967	23-Nov-2022 18:00
Balimela	Trf1-40MVA 220/33kV	OPT01893	3.840300	5557	5.333750	8372.335397	02-Nov-2022 7:15
Balimela	Trf2-20MVA 220/33kV	OPT01895	2.523351	3616	3.504654	10789.052970	03-Nov-2022 17:45
Balugaon	Khallikote Feeder 33kV	OPT00747	6.686274	15927	9.286492	17277.770690	24-Nov-2022 7:45
Berhampur	Trf1-40MVA 132/33kV	OPT00121	8.000611	16850	11.111960	17448.087367	04-Nov-2022 12:30
Berhampur	Trf2-20MVA 132/33kV	B0004476	5.018990	10762	6.970819	10761.923801	08-Nov-2022 19:00
Berhampur	Trf3-40MVA 132/33kV	OPT00123	8.154744	17191	11.326033	22140.144887	11-Nov-2022 12:45
Bhanjanagar	Trf1-40MVA 132/33kV	OPT02084	4.325360	9295	6.007445	9300.351563	08-Nov-2022 18:45
Bhanjanagar	Trf2-16MVA 132/33kV	OPT01375	2.823992	6045	3.922211	6084.430244	11-Nov-2022 11:30
Bhanjanagar	Trf3-40MVA 132/33kV	OPT01393	4.391820	9352	6.099750	9433.981132	11-Nov-2022 11:30
Boudh	Aditya Birla Solar-I 33kV	ORU51513	2.175946	0	3.022148	12856.280000	21-Nov-2022 11:00
Boudh	Aditya Birla Solar-II 33kV	ORU51512	2.159071	0	2.998710	12493.440000	04-Nov-2022 11:15
Boudh	Trf1-20MVA 132/33kV	OPT01155	1.404636	3915	1.950883	10324.000000	18-Nov-2022 10:45
Boudh	Trf2-20MVA 132/33kV	OPT00858	1.411493	3931	1.960407	10452.000000	18-Nov-2022 10:45
Chatrapur	IRE Feeder1 132kV	APM03533	0.124672	13	0.173156	3641.792999	30-Nov-2022 23:00
Chatrapur	IRE Feeder2 132kV	APM03517	5.128502	9174	7.122920	10089.298618	10-Nov-2022 19:00
Chatrapur	Rambha Tr. Fdr 132kV	OPT00688	3.297890	4775	4.580403	11144.792506	27-Nov-2022 13:00
Chatrapur	Trf1-20MVA 132/33kV	OPT00786	4.623576	8026	6.421633	12625.280036	26-Nov-2022 16:15
Chatrapur	Trf2-20MVA 132/33kV	OPT00715	4.086451	6897	5.675626	12429.271901	16-Nov-2022 12:30
Chatrapur	Trf3-20MVA 132/33kV	OPT00107	3.246381	5403	4.508863	9618.157064	18-Nov-2022 12:45
Chikiti	Trf1-40MVA 132/33kV	OPT01593	4.217170	8649	5.857181	8649.346796	08-Nov-2022 19:00
Dabugaon	Trf1-12.5MVA 132/33kV	OPT00717	2.147673	4308	2.982879	5243.952708	02-Nov-2022 17:45
Dabugaon	Trf2-12.5MVA 132/33kV	OPT00861	2.155063	4321	2.993143	5246.769673	02-Nov-2022 17:45
Digapahandi	Trf1-20MVA 132/33kV	APM03696	4.008642	8794	5.567559	10884.068148	17-Nov-2022 8:00
Digapahandi	Trf2-20MVA 132/33kV	APM03549	4.087613	8880	5.677240	11211.268397	17-Nov-2022 8:15
Digapahandi	Trf3-12.5MVA 132/33kV	APM12597	2.610834	5643	3.625881	7081.095541	17-Nov-2022 8:00
G. UDAYAGIRI	Trf1-20MVA 132/33kV	OPT02312	1.385731	3042	1.924826	3503.542592	26-Nov-2022 18:00
G. UDAYAGIRI	Trf2-20MVA 132/33kV	OPT01437	1.352194	2973	1.878047	3404.190359	26-Nov-2022 18:00
Ganjam	GRASIM Ind. Ltd. 132kV	OPT00003	12.848116	18676	17.844605	19044.612509	22-Nov-2022 14:30
Ganjam	Trf1-20MVA 132/33kV	OPT00347	2.976911	11606	4.134599	11997.122322	08-Nov-2022 19:30

STATE LOAD DESPATCH CENTRE

OFFICE OF Sr.G.M.(POWER SYSTEM) BHUBANESWAR - 751 017 FAX-0674-2748509/2478218

(Annexure - 1)

Report Generated on: 12/3/2022 12:51:29PM

SUBSTATION	METERING POINT	METER NO	ENERGY(MU)	SMD(KVA)	AVERAGE DEMAND(MWatts)	MAX DEMAND (KVA)	MAX DEMAND(KVA) TIME
Ganjam	Trf2-12.5MVA 132/33kV	OPT00897	1.821157	6960	2.529385	7296.791578	08-Nov-2022 19:30
Govindapalli	TPSODL Feeders	TPSODL-01	1.322616	1493	1.958178	3455.000000	08-Nov-2022 18:45
Guhipiti	GEDCOL Solar 2MW 33KV	ORA00072	0.254726	0	0.353786	1631.560000	19-Nov-2022 12:15
Hinjili GIS	Trf1-20MVA 132/33kV	OPT02306	4.018356	10472	5.581049	10627.449886	10-Nov-2022 6:45
Jayanagar	JAYPUR PG 28KV TERTIARY	ER1599-A	0.022825	32	0.031701	31.701389	01-Nov-2022 0:00
Jayanagar	JAYPUR PG 33KV TERTIARY	ER1600-A	0.029910	42	0.041542	41.541667	01-Nov-2022 0:00
Jayanagar	JAYPUR PG 430V TERTIARY	NP5985-A	0.055139	77	0.076582	76.581944	01-Nov-2022 0:00
Jayanagar	Traction Feeder 132kV	OPT00932	6.301330	16355	8.751847	27468.935181	02-Nov-2022 10:45
Jayanagar	Trf1-12.5MVA 132/33kV	OPT00917	2.984803	6185	4.145560	6849.888758	08-Nov-2022 18:30
Jayanagar	Trf2-20MVA 132/33kV	OPT01052	4.244300	8887	5.894861	9827.684163	08-Nov-2022 18:30
Jayanagar	Trf3-20MVA 132/33kV	APM12635	4.345787	8992	6.035815	10015.352473	08-Nov-2022 18:45
Jayanagar	Trf4-20MVA 132/33kV	OPT02172	4.333920	9039	6.019333	10082.855771	08-Nov-2022 18:30
Kasipur	220/33KV 20MVA TRF 1	OPT01473	0.714607	1817	0.992510	2043.592914	13-Nov-2022 18:00
Laxmipur	Laxmipur RTSS 220kV	OPT02254	0.951588	3602	1.321650	11219.534229	18-Nov-2022 14:00
Laxmipur	Trf1-20MVA 220/33kV	OPT00741	2.269583	10876	3.152199	11564.226217	02-Nov-2022 6:45
Laxmipur	TRF2-20MVA 220/33KV	OPT01479	2.500861	4	3.473418	11780.684530	16-Nov-2022 7:15
Laxmipur	UTKAL ALUMINA Fdr-1 220kV	OPT00819	0.015720	5240	0.021833	5720.139658	05-Nov-2022 1:45
Laxmipur	UTKAL ALUMINA Fdr-2 220kV	OPT00875	0.174060	5121	0.241750	14259.312746	21-Nov-2022 18:15
Malkangiri	Trf1-40MVA 220/33kV	OPT01779	3.175240	8010	4.410056	8016.483019	08-Nov-2022 18:45
Malkangiri	Trf2-40MVA 220/33kV	OPT00710	3.209560	7989	4.457722	8166.622895	08-Nov-2022 18:45
Meenakshi s/w	Megalifi Feeder 33kV	OPT01557	0.003046	4	0.004231	220.327030	14-Nov-2022 11:45
Mohana	Trf1-12.5MVA 132/33kV	OPT01794	1.775388	3877	2.465818	4216.548351	28-Nov-2022 18:15
Mohana	Trf2-12.5MVA 132/33kV	OPT01666	1.673950	3617	2.324931	3993.059980	28-Nov-2022 18:15
Muniguda	Bissam-Cuttack Tr.132kV	OPT01798	4.252860	9073	5.906750	21264.242286	24-Nov-2022 16:00
Muniguda	Trf1- 12.5MVA 132/33kV	OPT02161	2.284657	8331	3.173135	8660.142714	08-Nov-2022 18:45
Nabarangpur	Trf1-20MVA 132/33kV	OPT02258	5.173630	5260	7.185598	13374.932364	16-Nov-2022 18:00
Narendrapur	220 KV TATA Feeder-I	OREB9352	0.000000	0	0.000000	0.000000	01-Nov-2022 0:00
Narendrapur	220 KV TATA Feeder-II	OREB9350	17.015510	23169	23.632653	25659.493370	17-Nov-2022 20:30
Narendrapur	Narendrapur Traction 132kV	OPT00859	3.452030	2744	4.794486	11986.725992	12-Nov-2022 21:45
Narendrapur	Trf1-20MVA 132/33kV	OPT01837	2.463906	5352	3.422092	5375.310968	08-Nov-2022 18:45
Narendrapur	Trf2-40MVA 132/33kV	OPT00676	4.036730	8465	5.606569	11208.139899	02-Nov-2022 7:45
Narendrapur	Trf3-40MVA 132/33kV	OPT00856	5.097150	11060	7.079375	11273.473289	08-Nov-2022 18:45
Narendrapur	Trf4-40MVA 132/33kV	OPT01810	4.147350	8826	5.760208	11182.844003	22-Nov-2022 16:15
Paralakhemendi	Trf1-12.5MVA 132/33kV	OPT01956	2.542696	4818	3.531522	6281.677483	03-Nov-2022 18:30
Paralakhemendi	Trf2-12.5MVA 132/33kV	OPT01958	2.557444	4866	3.552006	6340.851678	03-Nov-2022 18:30
Paralakhemendi	Trf3-12.5MVA 132/33kV	OPT00537	2.706514	5094	3.759047	6738.270401	03-Nov-2022 10:45
Phulbani	Trf1-40MVA 132/33kV	OPT01879	4.576690	10695	6.356514	11900.453773	10-Nov-2022 11:45
Phulbani	Trf2-12.5MVA 132/33kV	OPT01880	0.729417	0	1.013079	3342.166962	29-Nov-2022 19:45
Phulbani	Trf3-40MVA 132/33kV	OPT01883	4.127640	9696	5.733111	12480.833306	11-Nov-2022 10:45
Podagada	Trf1-20MVA 132/33kV	OPT02348	0.672811	1472	0.934460	2087.123802	21-Nov-2022 7:00

STATE LOAD DESPATCH CENTRE

OFFICE OF Sr.G.M.(POWER SYSTEM) BHUBANESWAR - 751 017 FAX-0674-2748509/2478218

(Annexure - 1)

Report Generated on: 12/3/2022 12:51:29PM

SUBSTATION	METERING POINT	METER NO	ENERGY(MU)	SMD(KVA)	AVERAGE DEMAND(MWatts)	MAX DEMAND (KVA)	MAX DEMAND(KVA) TIME
Podagada	Trf2-12.5MVA 132/33kV	OPT01802	0.428523	940	0.595171	1333.350667	21-Nov-2022 7:15
Potangi	Trf1-40MVA 132/33kV	OPT00247	1.390066	3020	1.930647	5479.597065	12-Nov-2022 7:00
Purushottampur	Trf1-12.5MVA 132/33kV	OPT00151	1.925871	4375	2.674821	4731.952763	24-Nov-2022 6:45
Purushottampur	Trf2-12.5MVA 132/33kV	OPT00156	1.987363	4435	2.760226	4869.412864	24-Nov-2022 6:45
Purushottampur	Trf3-20MVA 132/33kV	OPT01795	3.084114	7177	4.283492	7620.546962	24-Nov-2022 6:45
Rayagada	Traction Feeder 132kV	OPT01292	3.713560	5689	5.157722	17484.164284	08-Nov-2022 17:15
Rayagada	Trf1-12.5MVA 132/33kV	OPT01846	1.621367	4284	2.251899	4505.720608	08-Nov-2022 18:45
Rayagada	Trf2-12.5MVA 132/33kV	OPT01848	1.335049	3718	1.854235	3846.945802	08-Nov-2022 18:45
Rayagada	Trf3-20MVA 132/33kV	OPT01809	2.274878	6056	3.159553	11179.144153	24-Nov-2022 12:45
Sonepur	Manamunda Feeder 33kV	OPT01720	4.431166	12827	6.154397	13291.075502	01-Nov-2022 18:00
Sunabeda	HAL Feeder 132kV	OPT01892	3.301068	7456	4.584817	10327.049530	25-Nov-2022 9:00
Sunabeda	Trf1-12.5MVA 132/33kV	OPT01890	3.574577	8038	4.964690	8434.353561	18-Nov-2022 7:15
Sunabeda	Trf2-12.5MVA 132/33kV	OPT01888	3.471233	6298	4.821157	8169.533646	18-Nov-2022 6:00
Sunabeda	Trf3-20MVA 132/33kV	OPT01891	5.535587	12534	7.688288	13157.497634	18-Nov-2022 7:15
Tentulikhunti	Mukhiguda Fdr 33KV	OPT01790	-0.499578	-1272	-0.693858	1949.871791	05-Nov-2022 17:45
Tentulikhunti	Trf1-20MVA 132/33kV	OPT01900	1.945206	6578	2.701675	9082.728821	05-Nov-2022 18:00
Tentulikhunti	Trf2-20MVA 132/33kV	OPT01902	1.679787	6353	2.333010	6448.818807	08-Nov-2022 18:45
Tentulikhunti	Trf3-20 MVA 132/33kV	APM12627	1.253427	4307	1.740870	6382.997435	05-Nov-2022 18:15
Tentulikhunti	Vento Energy Infra Pvt Ltd Solar 132KV	Y0639836	0.031210	291	0.043347	36240.000000	21-Nov-2022 12:45
Theruball	Bhalumaska RTSS 132kV	OPT01439	1.266000	566	1.758333	13029.197960	23-Nov-2022 2:15
Theruball	JK Feeder 132kV(Biomass)	OPT01869	5.836735	9109	8.106576	12654.695867	14-Nov-2022 7:00
Theruball	Trf1-12.5MVA 132/33kV	OPT01398	1.932624	3919	2.684200	7947.260157	24-Nov-2022 10:45
Theruball	Trf2-12.5MVA 132/33kV	OPT01090	2.273474	3663	3.157603	6687.872008	02-Nov-2022 17:30
Umerkote	Trf1-20MVA 132/33kV	OPT00674	6.704969	12429	9.312457	13242.842585	08-Nov-2022 18:30
Umerkote	Trf2-20MVA 132/33kV	OPT01238	6.886073	12733	9.563990	13566.552989	08-Nov-2022 18:30

TOTAL: 322.591572 675,113

AT: 08-Nov-2022 19:00

DETAILS

TOTAL ENERGY CONSUMED	322.591572
STATION CONSUMPTION	0.320732
NET CONSUMPTION	322.270840

GRIDCO LIMITED

(A Govt. of Odisha Undertaking)
(Formerly Grid Corporation of Orissa Limited)
Regd. Office: Janpath, Bhubaneswar-751022
Ph:0674-2541320/2540098/2540877 Fax:0674-2541904 E-mail:sgm.pp@gridco.co.in
CIN: U40109OR1995SGC003960

Ref. No.: CGM-PP-50/2022/ 05 (8) Date: 04.01.2023

To

The Chief Executive Officer,
TP Southern Odisha Distribution Limited
Courtpeta, Berhampur.

Sub: Energy Bill for the Month of Dec-2022

Dear Sir,

Enclosed please find herewith the Bulk supply energy bill for the month of Dec-2022 for Rs.72,84,08,630.00 towards supply of power by GRIDCO to TPSODL.

You are requested to kindly release the payment at the earliest. The rebate for prompt payment shall be admissible as per tariff order. The Energy Flow Statement, furnished by SLDC, based on which the bill is prepared are enclosed herewith for your reference.

Thanking You.

Encl: As stated above.

Yours faithfully,

04/01/2023

GM (T&BS)

Copy to:

Nodal Officer, DISCOM Monitoring Unit (DMU), GRIDCO, Bhubaneswar
Chief Load Despatcher, SLDC, Mancheswar, Bhubaneswar.
CFO, GRIDCO, Bhubaneswar.
DGM (F) PP Branch, GRIDCO, Bhubaneswar.
DGM (R & T), GRIDCO, Bhubaneswar
Manager, Union Bank of India, Main Branch, Bhubaneswar
GUARD File

GRIDCO

G R I D C O Limited

Registered Office: Janpath
Bhubaneswar 751022
CIN: U40109OR1995SGC003960

Bill of Supply

For TPSODL

December-2022

GRIDCO GSTIN:21AABCG5398P1Z3
Goods Description: Electricity
HSN Code: 27160000
Ref No: GR/BS/22-23/ 436

Date: 04-Jan-23
Pay By Date: 03-Feb-23

The Chief Executive Officer
TP Southern Odisha Distribution Limited
Courtpeta, Berhampur, Odisha
GSTIN: 21AAICT3239P1Z1

A. Total Energy for the month	320.886859 MU
B. SMD approved by OERC	7,20,000 kVA
SMD permitted by OERC	7,92,000 kVA
Actual SMD occurred	6,38,756 kVA
Excess SMD drawal	0 kVA

Item No			Amount (Rs.)
1	Current Charges		
	(a) Bulk Supply Price @ 227 Paise per kWh for the Energy	72,84,08,629.93	
	(b) Excess Demand Charge @ Rs 250 per kVA	0.00	
	Sub Total: (a+b)		72,84,08,629.93
2	Debit/Credit Bills:		
	a) Debit Bills for the _____ vide Bill Nos _____ Dtd _____	0.00	
	Sub Total: (a+b)		0.00
3	Total Current Charges: Items (1+2)		72,84,08,630.00
4	Add Delayed Payment Surcharge for the month of Dec-2022 (Annex-6)		-
5	Add: Previous amount outstanding :-		
	(i) Outstanding energy charges	1,49,10,00,598.00	
	(ii) Outstanding DPS	-	
	Total Previous Outstanding: (i+ii)		1,49,10,00,598.00
6	Less payment received during the month		
	(a) Collection for Oct'22	76,69,29,665.00	
	(b) Rebate on Oct'22	76,93,930.00	
	(c) Amount against TDS	7,69,393.00	
	(d) Other Adjustment (if any)	-	
	Total Payment and Adjustment: (a+b+c+d)		(76,93,93,008.00)
7	Total amount claimed through this bill: Item (3 to 6)		1,45,00,16,220.00
	(Rounded off to the nearest Rupee)		1,45,00,16,220.00

(Rupees one hundred forty five crore sixteen thousand two hundred twenty only)

Checked by

DGM(F), PP

DGM (EBC)

For & on behalf of GRIDCO

GM(T&BS)

Note:

1. The BSP Bill of Supply for the month has been prepared in line with the Bulk Supply Agreement executed with TPSODL and ARR & BSP Order dated 24.03.2022 in Case No 107/2021.
2. The billing for Bulk Supply of Power has been done based on the actual energy consumption statement provided by SLDC and in line with the Clause No. 388 of the BSP order Dt.24.03.2022 of GRIDCO for FY-2022-23 in Case No.107/2021 in the matter of overdrawal by the DISCOMs and as per the rates stipulated at Clause No.384 & 392 of the said BSP Order.
3. In line with the decisions of the 98th & 99th PSOC Meetings and discussions held among GRIDCO, SLDC & WESCO Utility in the chamber of CGM(PP), in the Meeting Dtd 29.08.2016, the Energy Import by Solar Entities has been deducted from the Energy Import Figure of DISCOMs.
4. Rebate for prompt payment & Delayed Payment Surcharge shall be admissible/imposed as per the Clause No. 389 & 390 of BSP Order of GRIDCO Dt.24/03/2022 in case No.107 of 2021 of OERC and relevant provisions of Bulk Supply Agreement executed with TPSODL.
5. In case of any default in monthly BSP dues by the DISCOMs, they are liable for imposition of power regulation to the extent of non payment of monthly BSP dues as per Clause No. 385 of the BSP Order.
6. Statutory levy/duty/taxes/cess/fuel etc. imposed under any law from time to time shall be charged over and above the bulk supply price fixed by the Commission as per Clause No. 381 of the BSP Order.
7. Discrepancy, if any, found later on, towards the billing will be taken into account.
8. **Details of the Annexures -**

Annexure 1	Energy Flow Statement	Annexure 2	Station Consumption statement
Annexure 3	Open Access Statements	Annexure 4	Main/Check Comparison of Solar Plants
Annexure 5	Energy Accounting Statement of SLDC	Annexure 6	Delayed Payment Surcharge
Annexure 7	Rebate Statement	Annexure 8	Billing Consideration Statement
Annexure 9	Billing Information Statement		

STATE LOAD DESPATCH CENTRE

OFFICE OF Sr.G.M.(POWER SYSTEM) BHUBANESWAR - 751 017 FAX-0674-2748509/2478218

(Annexure - 1)

Report Generated on: 1/3/2023 6:10:42PM

ENERGY FLOW FOR : TPSODL

BILLING CYCLE FROM 01-Dec-2022 BILLING CYCLE TO 31-Dec-2022

SUBSTATION	METERING POINT	METER NO	ENERGY(MU)	SMD(KVA)	AVERAGE DEMAND(MWatts)	MAX DEMAND (KVA)	MAX DEMAND(KVA) TIME
Akhusingi	Trf1-12.5MVA 132/33kV	OPT02182	3.059838	4844	4.112686	9400.177749	18-Dec-2022 11:30
Akhusingi	Trf2-12.5MVA 132/33kV	OPT02184	2.984647	4742	4.011623	8986.209391	18-Dec-2022 12:30
Aska	Trf1-40MVA 132/33kV	OPT01187	6.459600	14788	8.682258	20977.168541	20-Dec-2022 8:45
Aska	Trf2-40MVA 132/33kV	OPT00961	6.349860	14473	8.534758	22530.264091	13-Dec-2022 8:30
Aska	Trf3-40MVA 132/33kV	OPT01457	6.369960	14537	8.561801	22561.985728	13-Dec-2022 8:30
Aska New(220/132/33)	Trf1-40MVA 132/33kV	OPT01811	5.885520	12827	7.910645	14750.945732	23-Dec-2022 18:30
Balimela	Trf1-40MVA 220/33kV	OPT01893	3.796960	4048	5.103441	9333.809512	02-Dec-2022 10:15
Balimela	Trf2-20MVA 220/33kV	OPT01895	2.487183	2633	3.342988	10529.575110	03-Dec-2022 9:30
Balugaon	Khallikote Feeder 33kV	OPT00747	6.381935	15064	8.577870	18929.638137	12-Dec-2022 18:15
Berhampur	Trf1-40MVA 132/33kV	OPT00121	7.720831	12085	10.377193	19329.951662	30-Dec-2022 11:00
Berhampur	Trf2-20MVA 132/33kV	B0004476	4.974670	7531	6.686384	12330.490109	30-Dec-2022 11:00
Berhampur	Trf3-40MVA 132/33kV	OPT00123	7.701103	12316	10.350945	16015.483231	01-Dec-2022 7:30
Bhanjanagar	Trf1-40MVA 132/33kV	OPT02084	4.061378	8987	5.458841	11409.413938	12-Dec-2022 8:15
Bhanjanagar	Trf2-16MVA 132/33kV	OPT01273	2.635190	5829	3.541922	8981.027113	07-Dec-2022 8:15
Bhanjanagar	Trf3-40MVA 132/33kV	OPT01277	4.195510	9038	5.639126	13963.609848	07-Dec-2022 8:15
Boudh	Aditya Birla Solar-I 33kV	ORU51513	2.110026	8730	2.836056	12880.360000	05-Dec-2022 11:30
Boudh	Aditya Birla Solar-II 33kV	ORU51512	2.098112	8708	2.820043	12585.160000	07-Dec-2022 12:00
Boudh	Trf1-20MVA 132/33kV	OPT01155	1.525932	5880	2.050964	10560.000000	24-Dec-2022 12:30
Boudh	Trf2-20MVA 132/33kV	OPT00858	1.533736	5820	2.061473	10560.000000	24-Dec-2022 12:30
Chatrapur	IRE Feeder1 132kV	APM03533	2.571718	3562	3.456610	9714.812808	17-Dec-2022 19:45
Chatrapur	IRE Feeder2 132kV	APM03517	3.325966	5477	4.470385	6309.068529	14-Dec-2022 19:00
Chatrapur	Rambha Tr. Fdr 132kV	OPT00688	3.535870	3841	4.752513	11402.526036	07-Dec-2022 11:00
Chatrapur	Trf1-20MVA 132/33kV	OPT00786	4.647972	5892	6.247274	12452.310950	04-Dec-2022 8:00
Chatrapur	Trf2-20MVA 132/33kV	OPT00715	4.129324	4914	5.550167	10576.937931	18-Dec-2022 7:30
Chatrapur	Trf3-20MVA 132/33kV	OPT00107	3.243973	3285	4.360179	8449.392082	18-Dec-2022 7:45
Chikiti	Trf1-40MVA 132/33kV	OPT01593	3.622720	4929	4.869247	8879.819818	13-Dec-2022 10:45
Dabugaon	Trf1-12.5MVA 132/33kV	OPT00717	2.408303	3704	3.236966	7691.205367	14-Dec-2022 17:30
Dabugaon	Trf2-12.5MVA 132/33kV	OPT00861	2.162140	3659	2.906102	5258.334337	22-Dec-2022 18:00
Digapahandi	Trf1-20MVA 132/33kV	APM03696	3.779402	8035	5.079842	10760.948277	02-Dec-2022 17:45
Digapahandi	Trf2-20MVA 132/33kV	APM03649	3.927067	8510	5.278316	13655.229152	20-Dec-2022 8:15
Digapahandi	Trf3-12.5MVA 132/33kV	APM12597	2.489158	5309	3.345642	8506.562265	20-Dec-2022 8:15
G. UDAYAGIRI	Trf1-20MVA 132/33kV	OPT02312	1.522482	3152	2.046347	5732.727068	27-Dec-2022 18:15
G. UDAYAGIRI	Trf2-20MVA 132/33kV	OPT01437	1.447164	3056	1.945113	4014.346273	10-Dec-2022 7:45
Ganjam	GRASIM Ind. Ltd. 132kV	OPT00003	11.942988	14265	16.052403	18434.692583	01-Dec-2022 20:15
Ganjam	Trf1-20MVA 132/33kV	OPT00347	2.764952	5729	3.716333	13702.258185	12-Dec-2022 17:30

STATE LOAD DESPATCH CENTRE

OFFICE OF Sr.G.M.(POWER SYSTEM) BHUBANESWAR - 751 017 FAX-0674-2748509/2478218

(Annexure - 1)

Report Generated on: 1/3/2023 6:10:42PM

SUBSTATION	METERING POINT	METER NO	ENERGY(MU)	SMD(KVA)	AVERAGE DEMAND(MWatts)	MAX DEMAND (KVA)	MAX DEMAND(KVA) TIME
Ganjam	Trf2-12.5MVA 132/33kV	OPT00697	1.621227	5901	2.179069	6211.819701	29-Dec-2022 8:45
Govindapalli	TPSODL Feeders	TPSODL-01	1.310532	0	1.761468	3103.440000	02-Dec-2022 18:00
Guhipita	GEDCOL Solar 2MW 33KV	ORA00072	0.242440	1076	0.325861	1627.520000	07-Dec-2022 11:30
Gunupur	Trf1-20MVA 132/33kV	OPT01600	0.000151	0	0.001917	40.792156	30-Dec-2022 13:00
Gunupur	Trf2-20MVA 132/33kV	OPT01601	0.000031	0	0.000394	41.761226	30-Dec-2022 11:45
Hinjili GIS	Trf1-20MVA 132/33kV	OPT02306	3.127144	7183	4.203150	8614.664056	16-Dec-2022 7:15
Hinjili GIS	Trf2-20MVA 132/33kV	OPT02379	0.492391	0	5.129070	11599.240634	30-Dec-2022 7:15
Jayanagar	JAYPUR PG 26KV TERTIARY	ER1599-A	0.026432	36	0.035527	35.526882	01-Dec-2022 0:00
Jayanagar	JAYPUR PG 33KV TERTIARY	ER1600-A	0.022412	30	0.030124	30.123656	01-Dec-2022 0:00
Jayanagar	JAYPUR PG 430V TERTIARY	NP5965-A	0.038897	52	0.052281	52.280914	01-Dec-2022 0:00
Jayanagar	Traction Feeder 132kV	OPT00932	7.411820	23268	9.962124	28385.517434	25-Dec-2022 10:00
Jayanagar	Trf1-12.5MVA 132/33kV	OPT00917	3.012811	5894	4.049477	6868.277012	30-Dec-2022 10:00
Jayanagar	Trf2-20MVA 132/33kV	OPT01052	4.326169	8467	5.814743	11451.307000	28-Dec-2022 10:00
Jayanagar	Trf3-20MVA 132/33kV	APM12635	4.408586	8966	5.925519	11580.265409	28-Dec-2022 10:15
Jayanagar	Trf4-20MVA 132/33kV	OPT02172	4.402223	8711	5.916966	11667.986884	28-Dec-2022 10:00
Kaspur	220/33KV 20MVA TRF 1	OPT01473	0.755060	1346	1.014868	2073.833461	23-Dec-2022 18:00
Laxmipur	Laxmipur RTSS 220kV	OPT02254	1.148004	9056	1.543016	10962.313019	16-Dec-2022 7:30
Laxmipur	Trf1-20MVA 220/33kV	OPT00741	3.202464	9299	4.304387	12700.551799	09-Dec-2022 8:15
Laxmipur	TRF2-20MVA 220/33KV	OPT01479	1.866875	0	2.509241	12417.358817	19-Dec-2022 7:30
Laxmipur	UTKAL ALUMINA Fdr-1 220kV	OPT00819	0.017120	5000	0.023011	5760.138887	22-Dec-2022 0:00
Laxmipur	UTKAL ALUMINA Fdr-2 220kV	OPT00875	0.265530	5160	0.356895	18957.003983	10-Dec-2022 22:15
Malkangiri	Trf1-40MVA 220/33kV	OPT01779	3.195640	5996	4.295215	7044.771111	01-Dec-2022 18:00
Malkangiri	Trf2-40MVA 220/33kV	OPT00710	3.230260	5814	4.341747	7010.049928	01-Dec-2022 18:15
Meenakshi s/w	Magalifi Feeder 33kV	OPT01557	0.004736	0	0.006366	430.813185	17-Dec-2022 11:00
Mohana	Trf1-12.5MVA 132/33kV	OPT01794	1.892968	882	2.544312	6892.608216	25-Dec-2022 9:00
Mohana	Trf2-12.5MVA 132/33kV	OPT01886	1.890411	6501	2.540875	6768.989910	24-Dec-2022 9:00
Muniguda	Bissam-Cuttack Tr.132kV	OPT01798	4.513650	5871	6.066734	20763.044083	21-Dec-2022 16:15
Muniguda	Trf1- 12.5MVA 132/33kV	OPT02161	3.319253	6179	4.461361	7258.937941	12-Dec-2022 18:00
Nabarangpur	Trf1-20MVA 132/33kV	OPT02258	4.049584	4953	5.443123	14675.772734	30-Dec-2022 10:15
Narendrapur	220 KV TATA Feeder-I	OREB9352	0.000000	0	0.000000	0.000000	01-Dec-2022 0:00
Narendrapur	220 KV TATA Feeder-II	OREB9350	15.566260	24120	20.922392	26650.107632	06-Dec-2022 1:45
Narendrapur	Narendrapur Traction 132kV	OPT00859	3.814190	8012	5.126599	11888.145356	28-Dec-2022 14:45
Narendrapur	Trf1-20MVA 132/33kV	OPT01837	2.291284	3735	3.079683	5773.601995	07-Dec-2022 8:45
Narendrapur	Trf2-40MVA 132/33kV	OPT00676	3.682210	5919	4.949207	9287.238556	07-Dec-2022 8:30
Narendrapur	Trf3-40MVA 132/33kV	OPT00856	4.585840	7847	6.163763	8981.759293	02-Dec-2022 17:45
Narendrapur	Trf4-40MVA 132/33kV	OPT01810	3.784570	6161	5.086788	9540.146749	07-Dec-2022 8:45
Paralakhemendi	Trf1-12.5MVA 132/33kV	OPT01956	2.007271	3334	2.697945	6216.674352	03-Dec-2022 18:15
Paralakhemendi	Trf2-12.5MVA 132/33kV	OPT01958	2.026077	3367	2.723222	6249.597747	03-Dec-2022 18:15
Paralakhemendi	Trf3-12.5MVA 132/33kV	OPT00537	2.121639	3503	2.851665	5897.027048	15-Dec-2022 18:30
Phulbani	Trf1-40MVA 132/33kV	OPT01879	4.126960	0	5.546989	13165.348457	26-Dec-2022 8:45

STATE LOAD DESPATCH CENTRE

OFFICE OF Sr.G.M.(POWER SYSTEM) BHUBANESWAR - 751 017 FAX-0674-2748509/2478218

(Annexure - 1)

Report Generated on: 1/3/2023 6:10:42PM

SUBSTATION	METERING POINT	METER NO	ENERGY(MU)	SMD(KVA)	AVERAGE DEMAND(MWatts)	MAX DEMAND (KVA)	MAX DEMAND(KVA) TIME
Phulbani	Trf2-12.5MVA 132/33kV	OPT01880	1.446843	4951	1.944413	5075.899132	24-Dec-2022 8:15
Phulbani	Trf3-40MVA 132/33kV	OPT01883	3.738110	13250	5.024341	13563.775288	24-Dec-2022 8:15
Podagada	Trf1-20MVA 132/33kV	OPT02348	1.235470	1793	1.660578	6217.979448	30-Dec-2022 6:00
Podagada	Trf2-12.5MVA 132/33kV	OPT01802	0.776442	1152	1.043605	5274.460731	30-Dec-2022 6:00
Potangi	Trf1-40MVA 132/33kV	OPT00622	2.433288	5575	3.270511	5856.691216	24-Dec-2022 6:30
Purushottampur	Trf1-12.5MVA 132/33kV	OPT00151	1.771521	3700	2.381077	4648.576941	01-Dec-2022 7:45
Purushottampur	Trf2-12.5MVA 132/33kV	OPT00156	1.922936	3887	2.584691	5871.628022	16-Dec-2022 6:45
Purushottampur	Trf3-20MVA 132/33kV	OPT01795	3.022423	5847	4.062397	9278.249835	16-Dec-2022 6:45
Rayagada	Traction Feeder 132kV	OPT01292	3.702350	2775	4.976277	15673.876355	08-Dec-2022 13:15
Rayagada	Trf1-12.5MVA 132/33kV	OPT01846	1.663108	2758	2.235360	4614.887214	13-Dec-2022 17:30
Rayagada	Trf2-12.5MVA 132/33kV	OPT01848	1.356061	1925	1.876426	3940.883150	13-Dec-2022 17:45
Rayagada	Trf3-20MVA 132/33kV	OPT01809	2.325433	4500	3.125582	6582.597664	13-Dec-2022 17:30
Sonepur	Manamunda Feeder 33kV	OPT01720	4.482589	8974	6.024985	11713.977975	30-Dec-2022 18:30
Sunabeda	HAL Feeder 132kV	OPT01892	3.456045	6042	4.643878	10770.212254	12-Dec-2022 10:30
Sunabeda	Trf1-12.5MVA 132/33kV	OPT01890	3.594122	7573	4.830809	8650.035838	22-Dec-2022 8:00
Sunabeda	Trf2-12.5MVA 132/33kV	OPT01889	3.510383	7267	4.718257	8388.591300	22-Dec-2022 8:00
Sunabeda	Trf3-20MVA 132/33kV	OPT01891	5.605005	11820	7.533609	13487.721231	22-Dec-2022 8:00
Tentulikhunti	Mukhiguda Fdr 33KV	OPT01790	-0.427392	-540	-0.574452	1392.143671	06-Dec-2022 18:00
Tentulikhunti	Trf1-20MVA 132/33kV	OPT01900	2.742038	6309	3.685535	8549.811694	10-Dec-2022 10:45
Tentulikhunti	Trf2-20MVA 132/33kV	OPT01902	2.611818	6096	3.510508	6344.812054	13-Dec-2022 7:45
Tentulikhunti	Trf3-20 MVA 132/33kV	APM12627	1.779472	4065	2.391763	5568.678100	10-Dec-2022 11:15
Tentulikhunti	Vento Energy Infra Pvt Ltd Solar 132KV	Y0639836	0.036000	24320	0.048387	36360.000000	08-Dec-2022 11:45
Therubali	Bhelumaska RTSS 132kV	OPT01439	1.356000	2332	1.822581	11440.279717	20-Dec-2022 1:30
Therubali	JK Feeder 132kV(Biomass)	OPT01669	7.721003	11767	10.377692	12631.614940	31-Dec-2022 12:00
Therubali	Trf1-12.5MVA 132/33kV	OPT01398	1.475804	2386	1.983608	6267.805996	01-Dec-2022 6:45
Therubali	Trf2-12.5MVA 132/33kV	OPT01090	1.376276	2247	1.849833	5880.429916	01-Dec-2022 6:45
Umerkote	Trf1-20MVA 132/33kV	OPT00674	7.555541	12550	10.155297	14524.585502	30-Dec-2022 7:30
Umerkote	Trf2-20MVA 132/33kV	OPT01238	7.760525	12797	10.430813	14939.926640	30-Dec-2022 7:30
		TOTAL:	323.722218	643,964			
		AT:	24-Dec-2022 8:45				

GRIDCO LIMITED

(A Govt. of Odisha Undertaking)
(Formerly Grid Corporation of Orissa Limited)
Regd. Office: Janpath, Bhubaneswar-751022
Ph:0674-2541320/2540098/2540877 Fax:0674-2541904 E-mail:sgm.pp@gridco.co.in
CIN: U40109OR1995SGC003960

Ref. No.: CGM-PP-50/2022/ 85 (8) Date: 03.02.2023

To

The Chief Executive Officer,
TP Southern Odisha Distribution Limited
Courtpeta, Berhampur.

Sub: Energy Bill for the Month of Jan-2023

Dear Sir,

Enclosed please find herewith the Bulk supply energy bill for the month of Jan-2023 for Rs.76,30,37,630.00 towards supply of power by GRIDCO to TPSODL.

You are requested to kindly release the payment at the earliest. The rebate for prompt payment shall be admissible as per tariff order. The Energy Flow Statement, furnished by SLDC, based on which the bill is prepared are enclosed herewith for your reference.

Thanking You.

Encl: As stated above.

Yours faithfully,

03/02/2023

GM (T&BS)

Copy to:

Nodal Officer, DISCOM Monitoring Unit (DMU), GRIDCO, Bhubaneswar
Chief Load Despatcher, SLDC, Mancheswar, Bhubaneswar.
CFO, GRIDCO, Bhubaneswar.
DGM (F) PP Branch, GRIDCO, Bhubaneswar.
DGM (R & T), GRIDCO, Bhubaneswar
Manager, Union Bank of India, Main Branch, Bhubaneswar
GUARD File

G R I D C O Limited
Registered Office: Janpath
Bhubaneswar 751022
CIN: U40109OR1996SGC003960

Bill of Supply

For TPSODL
January-2023

GRIDCO GSTIN:21AABCG5398P3Z3
Goods Description: Electricity
HSN Code: 27160000
Ref No: GR/BS/22-23/ 479

Date: 03-Feb-23
Pay By Date: 05-Mar-23

The Chief Executive Officer
TP Southern Odisha Distribution Limited
Courtpeta, Berhampur, Odisha
GSTIN: 21AAICT3239P1Z1

A. Total Energy for the month	325.775453	MU
B. SMD approved by OERC	7,20,000	kVA
SMD permitted by OERC	7,92,000	kVA
Actual SMD occurred	6,51,862	kVA
Excess SMD drawal	0	kVA

Item No			Amount (Rs.)
1	**Current Charges**		
	(a) Bulk Supply Price @ 227 Paise per kWh for the Energy	73,95,10,278.31	
	(b) Excess Demand Charge @ Rs 250 per kVA	0.00	
	Sub Total: (a+b)		73,95,10,278.31
2	**Debit/Credit Bills:**		
	a) Debit Bills for the months from Nov-2021 to Mar-2022 vide Bill Nos GR/BS/22-23/ 447 to 451 Dtd. 20.01.2023	81,93,890.00	
	b) Debit Bills for the months from Apr-2022 to Oct-2022 vide Bill Nos GR/BS/22-23/ 454 to 460 Dtd. 30.01.2023	1,53,33,762.00	
	Sub Total: (a+b)		2,35,27,652.00
3	**Total Current Charges: Items (1+2)**		76,30,37,630.00
4	**Add Delayed Payment Surcharge for the month of Jan-2023 (Annex-6)**		-
5	**Add: Previous amount outstanding :-**		
	(i) Outstanding energy charges	1,46,00,16,220.00	
	(ii) Outstanding DPS	-	
	Total Previous Outstanding: (i+ii)		1,46,00,16,220.00
6	**Less payment received during the month**		
	(a) Collection for Nov '22	71,36,69,906.00	
	(b) Rebate on Nov'22	72,16,076.00	
	(c) Amount against TDS	7,21,608.00	
	(d) Other Adjustment (if any)	-	
	Total Payment and Adjustment: (a+b+c+d)		(72,16,07,590.00)
7	**Total amount claimed through this bill: Item (3 to 6)**		1,49,14,46,260.00
	(Rounded off to the nearest Rupee)		1,49,14,46,260.00

(Rupees one hundred forty nine crore fourteen lakh forty six thousand two hundred sixty only)

Checked by

DGM(F), PP

GM (EBC)

For & on behalf of GRIDCO

GM(T&BS)

Note:

1. The BSP Bill of Supply for the month has been prepared in line with the Bulk Supply Agreement executed with TPSODL and ARR & BSP Order dated 24.03.2022 in Case No 107/2021.
2. The billing for Bulk Supply of Power has been done based on the actual energy consumption statement provided by SLDC and in line with the Clause No. 368 of the BSP order Dt.24.03.2022 of GRIDCO for FY-2022-23 in Case No.107/2021 in the matter of overdrawal by the DISCOMs and as per the rates stipulated at Clause No.384 & 392 of the said BSP Order.
3. In line with the decisions of the 98th & 99th PSOC Meetings and discussions held among GRIDCO, SLDC & WESCO Utility in the chamber of CGM(PP), in the Meeting Dtd.29.08.2016, the Energy Import by Solar Entities has been deducted from the Energy Import Figure of DISCOMs.
4. Rebate for prompt payment & Delayed Payment Surcharge shall be admissible/imposed as per the Clause No. 389 & 390 of BSP Order of GRIDCO Dt.24/03/2022 in case No.107 of 2021 of OERC and relevant provisions of Bulk Supply Agreement executed with TPSODL.
5. In case of any default in monthly BSP dues by the DISCOMs, they are liable for imposition of power regulation to the extent of non payment of monthly BSP dues as per Clause No. 385 of the BSP Order.
6. Statutory levy/duty/tax/cess/toll etc. imposed under any law from time to time shall be charged over and above the bulk supply price fixed by the Commission as per Clause No. 391 of the BSP Order.
7. Discrepancy, if any, found later on, towards the billing will be taken into account.
8. **Details of the Annexures -**

Annexure 1	Energy Flow Statement	Annexure 2	Station Consumption statement
Annexure 3	Open Access Statements	Annexure 4	Main/Check Comparison of Solar Plants
Annexure 5	Energy Accounting Statement of SLDC	Annexure 6	Delayed Payment Surcharge
Annexure 7	Rebate Statement	Annexure 8	Billing Consideration Statement
Annexure 9	Billing Information Statement		

STATE LOAD DESPATCH CENTRE
OFFICE OF Sr.G.M.(POWER SYSTEM) BHUBANESWAR - 751 017 FAX-0674-2748509/2478218

(Annexure - 1)

Report Generated on: 2/3/2023 2:36:17PM

ENERGY FLOW FOR : TPSODL

BILLING CYCLE FROM 01-Jan-2023 **BILLING CYCLE TO** 31-Jan-2023

SUBSTATION	METERING POINT	METER NO	ENERGY(MU)	SMD(KVA)	AVERAGE DEMAND(MWatts)	MAX DEMAND (KVA)	MAX DEMAND(KVA) TIME
Akhusingi	Trf1-12.5MVA 132/33kV	OPT02182	3.144483	6323	4.226456	6917.231650	10-Jan-2023 7:45
Akhusingi	Trf2-12.5MVA 132/33kV	OPT02184	3.069267	6168	4.125359	6758.267786	10-Jan-2023 7:45
Aska	Trf1-40MVA 132/33kV	OPT01167	6.465130	16655	8.689691	18553.317763	03-Jan-2023 9:45
Aska	Trf2-40MVA 132/33kV	OPT00961	6.332390	16333	8.511277	18153.655279	03-Jan-2023 9:45
Aska	Trf3-40MVA 132/33kV	OPT01457	6.321720	16443	8.496935	17485.857142	17-Jan-2023 18:15
Aska New	Trf1-40MVA 132/33kV	OPT01811	4.389940	8826	5.900457	14178.575387	01-Jan-2023 8:15
Aska New	Trf2-20MVA 132/33kV	OPT02377	1.570979	5364	2.517594	8308.421131	10-Jan-2023 16:00
Balimela	Trf1-40MVA 220/33kV	OPT01893	3.791620	7253	5.096263	8226.591032	21-Jan-2023 18:30
Balimela	Trf2-20MVA 220/33kV	OPT01895	2.475856	4684	3.327766	5367.810727	21-Jan-2023 18:30
Balugaon	Khallikote Feeder 33kV	OPT00747	6.276384	15889	8.436000	17039.478396	20-Jan-2023 19:00
Berhampur	Trf1-40MVA 132/33kV	OPT00121	7.273658	12446	9.776422	17075.889893	02-Jan-2023 18:30
Berhampur	Trf2-20MVA 132/33kV	B0064476	4.645201	7974	6.243549	12293.755163	03-Jan-2023 10:46
Berhampur	Trf3-40MVA 132/33kV	OPT00123	7.525853	12752	10.115384	19742.317533	03-Jan-2023 11:00
Bhanjanagar	Trf1-40MVA 132/33kV	OPT02084	4.121804	10052	5.540058	11858.605719	20-Jan-2023 18:45
Bhanjanagar	Trf2-16MVA 132/33kV	OPT01273	2.742262	6526	3.685836	9841.395836	13-Jan-2023 8:30
Bhanjanagar	Trf3-40MVA 132/33kV	OPT01277	4.262960	10175	5.729812	15323.968154	13-Jan-2023 8:30
Boudh	Aditya Birla Solar-I 33kV	ORU51513	2.233816	1782	3.002440	12782.680000	07-Jan-2023 13:00
Boudh	Aditya Birla Solar-II 33kV	ORU51612	2.216429	1636	2.979071	12705.720000	08-Jan-2023 11:30
Boudh	Trf1-20MVA 132/33kV	OPT01155	1.678754	2788	2.256390	9628.000000	10-Jan-2023 10:30
Boudh	Trf2-20MVA 132/33kV	OPT00858	1.687204	2897	2.267747	9764.000000	10-Jan-2023 10:30
Chatrapur	IRE Feeder1 132kV	APM03533	2.418857	3251	3.251152	3939.395625	10-Jan-2023 11:15
Chatrapur	IRE Feeder2 132kV	APM03517	3.574958	4422	4.805051	5239.092044	09-Jan-2023 20:15
Chatrapur	Rambha Tr. Fdr 132KV	OPT00686	3.165930	5846	4.255282	13441.488013	06-Jan-2023 7:45
Chatrapur	Trf1-20MVA 132/33kV	OPT00786	4.548855	7846	6.114052	16630.136019	12-Jan-2023 17:45
Chatrapur	Trf2-20MVA 132/33kV	OPT00715	4.094029	6713	5.502727	14530.346176	12-Jan-2023 17:45
Chatrapur	Trf3-20MVA 132/33kV	OPT00107	3.211939	5515	4.317122	9846.656317	19-Jan-2023 18:00
Chikiti	Trf1-40MVA 132/33kV	OPT01583	3.668750	7264	4.931116	7805.741477	17-Jan-2023 7:15
Dabugaon	Trf1-12.5MVA 132/33kV	OPT00717	2.441566	3946	3.281675	5924.804807	07-Jan-2023 18:15
Dabugaon	Trf2-12.5MVA 132/33kV	OPT00861	2.453033	3901	3.297087	5912.654903	07-Jan-2023 18:15
Digapahandi	Trf1-20MVA 132/33kV	APM03696	4.070764	9361	5.471457	13285.783785	05-Jan-2023 8:45
Digapahandi	Trf2-20MVA 132/33kV	APM03549	4.158239	9655	5.589031	13993.583909	04-Jan-2023 8:30
Digapahandi	Trf3-12.5MVA 132/33kV	APM12597	2.659788	6123	3.574983	8777.626257	04-Jan-2023 8:30
G. UDAYAGIRI	Trf1-20MVA 132/33kV	OPT02312	1.407130	3185	1.891303	5621.913723	07-Jan-2023 18:30
G. UDAYAGIRI	Trf2-20MVA 132/33kV	OPT01437	1.373134	3106	1.845610	5374.138070	07-Jan-2023 18:30
Ganjam	GRASIM Ind. Ltd. 132kV	OPT00003	11.867384	16807	15.950785	19031.300287	26-Jan-2023 14:45

STATE LOAD DESPATCH CENTRE
OFFICE OF Sr.G.M.(POWER SYSTEM) BHUBANESWAR - 751 017 FAX-0674-2748509/2478218

(Annexure - 1)

Report Generated on: 2/3/2023 2:36:17PM

SUBSTATION	METERING POINT	METER NO	ENERGY(MU)	SMD(KVA)	AVERAGE DEMAND(MWatts)	MAX DEMAND (KVA)	MAX DEMAND(KVA) TIME
Ganjam	Trf1-20MVA 132/33kV	OPT00347	4.017746	9941	5.400196	10645.664512	10-Jan-2023 8:00
Ganjam	Trf2-12.5MVA 132/33kV	OPT00697	2.458978	6061	3.305078	6391.034971	10-Jan-2023 8:00
Govindapalli	TPSODL Feeders	TPSODL-01	1.445338	2548	1.942656	3065.560000	06-Jan-2023 18:45
Guhipita	GEDCOL Solar 2MW 33KV	ORA00072	0.275942	436	0.370890	1659.560000	07-Jan-2023 12:15
Gunupur	Trf1-20MVA 132/33kV	OPT01440	0.059389	0	0.079824	364.087901	28-Jan-2023 18:15
Gunupur	Trf2-20MVA 132/33kV	OPT01800	0.058414	0	0.078513	364.197748	28-Jan-2023 18:15
Hinjili GIS	Trf1-20MVA 132/33kV	OPT02306	1.937985	4279	2.604819	8639.834660	17-Jan-2023 8:00
Hinjili GIS	Trf2-20MVA 132/33kV	OPT02379	1.924114	4445	2.586175	4677.076875	24-Jan-2023 7:00
Jayanagar	JAYPUR PG 28KV TERTIARY	ER1599-A	0.038513	52	0.051765	51.764785	01-Jan-2023 0:00
Jayanagar	JAYPUR PG 33KV TERTIARY	ER1600-A	0.001960	3	0.002634	2.634409	01-Jan-2023 0:00
Jayanagar	JAYPUR PG 430V TERTIARY	NP5965-A	0.029879	40	0.040160	40.159946	01-Jan-2023 0:00
Jayanagar	Traction Feeder 132kV	OPT00932	7.861460	20769	10.566478	29940.661315	24-Jan-2023 9:00
Jayanagar	Trf1-12.5MVA 132/33kV	OPT00917	3.823030	6708	5.138481	7597.298467	24-Jan-2023 10:15
Jayanagar	Trf2-20MVA 132/33kV	OPT01052	5.446222	9625	7.320191	10952.758191	24-Jan-2023 10:15
Jayanagar	Trf3-20MVA 132/33kV	APM12635	5.553221	9522	7.477448	11120.055958	24-Jan-2023 10:45
Jayanagar	Trf4-20MVA 132/33kV	OPT02172	5.541521	9827	7.448281	11155.653596	24-Jan-2023 10:15
Kalimela	Trf1-20MVA 220/33kV	OPT02260	0.411074	0	2.141012	4038.878175	24-Jan-2023 19:16
Kalimela	Trf2-20MVA 220/33kV	OPT02262	0.410295	0	2.136952	4032.406172	24-Jan-2023 19:15
Kasipur	220/33KV 20MVA TRF 1	OPT01473	0.787236	1467	1.058113	1997.518460	11-Jan-2023 8:15
Laxmipur	Laxmipur RTSS 220kV	OPT02254	0.974244	1861	1.309467	9583.855871	03-Jan-2023 22:45
Laxmipur	Trf1-20MVA 220/33kV	OPT00741	2.322047	4	3.121031	10722.268417	03-Jan-2023 7:30
Laxmipur	TRF2-20MVA 220/33KV	OPT01479	2.268130	11254	3.048562	11290.158546	12-Jan-2023 8:00
Laxmipur	UTKAL ALUMINA Fdr-1 220kV	OPT00819	0.015510	5200	0.020847	8558.598018	13-Jan-2023 15:00
Laxmipur	UTKAL ALUMINA Fdr-2 220kV	OPT00875	1.197970	5121	1.610175	22087.245188	23-Jan-2023 7:45
Malkangiri	Trf1-40MVA 220/33kV	OPT01779	2.809980	6354	3.776855	6989.935622	09-Jan-2023 7:15
Malkangiri	Trf2-40MVA 220/33kV	OPT00710	2.852700	6433	3.834274	10347.946656	08-Jan-2023 20:00
Meenakshi s/w	Megalift Feeder 33kV	OPT01557	0.013271	4	0.017837	432.684643	06-Jan-2023 10:30
Mohana	Trf1-12.5MVA 132/33kV	OPT01794	2.072909	3745	2.786168	8040.195023	04-Jan-2023 18:15
Mohana	Trf2-12.5MVA 132/33kV	OPT01886	1.642132	3525	2.207167	6982.751320	08-Jan-2023 9:00
Muniguda	Bissam-Cuttack Tr.132kV	OPT01798	4.463160	7145	5.998871	20999.047597	07-Jan-2023 20:00
Muniguda	Trf1- 12.5MVA 132/33kV	OPT02161	3.542684	6969	4.761673	7376.211987	13-Jan-2023 7:30
Nabarangpur	Trf1-20MVA 132/33kV	OPT02258	4.706395	5590	6.325800	14237.359750	28-Jan-2023 18:45
Narendrapur	220 KV TATA Feeder-I	OREB9352	0.000000	0	0.000000	0.000000	01-Jan-2023 0:00
Narendrapur	220 KV TATA Feeder-II	OREB9350	17.746290	24779	23.851196	26286.596800	24-Jan-2023 4:30
Narendrapur	Narendrapur Traction 132kV	OPT00859	3.182450	2280	4.277487	11467.937914	14-Jan-2023 11:30
Narendrapur	Trf1-20MVA 132/33kV	OPT01837	2.358733	4041	3.170340	8002.639665	06-Jan-2023 8:45
Narendrapur	Trf2-40MVA 132/33kV	OPT00676	3.689010	6501	4.958347	9313.903586	27-Jan-2023 9:15
Narendrapur	Trf3-40MVA 132/33kV	OPT00856	4.883710	8629	6.564126	16741.708396	06-Jan-2023 8:45
Narendrapur	Trf4-40MVA 132/33kV	OPT01810	3.855660	6715	5.182339	9582.400534	27-Jan-2023 9:15
Paralakhemendi	Trf1-12.5MVA 132/33kV	OPT01957	2.234255	4088	3.003031	9215.253442	04-Jan-2023 10:15

STATE LOAD DESPATCH CENTRE
OFFICE OF Sr.G.M.(POWER SYSTEM) BHUBANESWAR - 751 017 FAX-0674-2748509/2478218

(Annexure - 1)

Report Generated on: 2/3/2023 2:36:17PM

SUBSTATION	METERING POINT	METER NO	ENERGY(MU)	SMD(KVA)	AVERAGE DEMAND(MWatts)	MAX DEMAND (KVA)	MAX DEMAND(KVA) TIME
Paralakhemendi	Trf2-12.5MVA 132/33kV	OPT01859	2.252387	4142	3.027402	6542.710142	30-Jan-2023 18:45
Paralakhemendi	Trf3-12.5MVA 132/33kV	OPT00692	2.360911	4249	3.173267	9177.441909	11-Jan-2023 15:30
Phulbani	Trf1-40MVA 132/33kV	OPT01879	4.075530	7969	5.477863	9752.948272	08-Jan-2023 7:30
Phulbani	Trf2-12.5MVA 132/33kV	OPT01880	1.265235	2720	1.700585	3307.397769	08-Jan-2023 7:30
Phulbani	Trf3-40MVA 132/33kV	OPT01883	3.683070	7298	4.950363	8818.616572	08-Jan-2023 7:30
Podagada	Trf1-20MVA 132/33kV	OPT02348	3.238217	2955	4.352443	8810.316751	19-Jan-2023 7:45
Podagada	Trf2-12.5MVA 132/33kV	OPT01882	2.060183	1921	2.769063	5625.507622	19-Jan-2023 7:45
Polangi	Trf1-40MVA 132/33kV	OPT00247	1.738870	3174	2.336822	5880.425835	20-Jan-2023 8:30
Purushottampur	Trf1-12.5MVA 132/33kV	OPT00151	1.939564	4511	2.606941	6550.051437	31-Jan-2023 9:15
Purushottampur	Trf2-12.5MVA 132/33kV	OPT00156	2.021424	4643	2.716968	6331.537660	31-Jan-2023 9:30
Purushottampur	Trf3-20MVA 132/33kV	OPT01795	3.135770	7212	4.214745	8956.120589	08-Jan-2023 8:15
Rayagada	Traction Feeder 132kV	OPT01292	3.668770	6685	4.928454	15519.690719	12-Jan-2023 9:00
Rayagada	Trf1-12.5MVA 132/33kV	OPT01846	1.681648	3480	2.260280	5706.109007	30-Jan-2023 9:15
Rayagada	Trf2-12.5MVA 132/33kV	OPT01848	1.430544	2925	1.922774	4910.340110	30-Jan-2023 9:15
Rayagada	Trf3-20MVA 132/33kV	OPT01809	2.339784	4936	3.144871	6148.615454	12-Jan-2023 9:45
Sonepur	Manamunda Feeder 33kV	OPT01720	5.928318	10838	7.968169	13691.363701	12-Jan-2023 18:15
Sunabeda	HAL Feeder 132kV	OPT01892	3.026982	7128	4.068524	10373.076689	21-Jan-2023 8:45
Sunabeda	Trf1-12.5MVA 132/33kV	OPT01890	2.931766	8677	3.940546	8676.991184	12-Jan-2023 7:45
Sunabeda	Trf2-12.5MVA 132/33kV	OPT01889	2.820893	8394	3.791523	8393.646215	12-Jan-2023 7:45
Sunabeda	Trf3-20MVA 132/33kV	OPT01891	4.541264	13521	6.103849	13521.476842	12-Jan-2023 7:45
Tentulikhunti	Mukhiguda Fdr 33KV	OPT01790	-0.431330	-969	-0.579745	1454.620225	18-Jan-2023 17:00
Tentulikhunti	Trf1-20MVA 132/33kV	OPT01900	2.538996	6025	3.412829	6880.784795	14-Jan-2023 9:45
Tentulikhunti	Trf2-20MVA 132/33kV	OPT01902	2.445861	5823	3.287179	6622.363324	14-Jan-2023 9:45
Tentulikhunti	Trf3-20 MVA 132/33kV	APM12827	1.644420	3757	2.210241	4481.945117	14-Jan-2023 10:15
Tentulikhunti	Venlo Energy Infra Pvt Ltd Solar 132KV	Y0639835	0.034630	10120	0.046546	36360.000000	07-Jan-2023 11:45
Theruboli	Bhalumaska RTSS 132kV	OPT01439	1.199200	3124	1.611828	11034.491379	03-Jan-2023 20:30
Theruboli	JK Feeder 132kV(Biomass)	OPT01669	0.030715	44	0.041284	9943.652448	07-Jan-2023 17:45
Theruboli	Trf1-12.5MVA 132/33kV	OPT01398	1.509851	2866	2.029504	4092.951991	23-Jan-2023 9:45
Theruboli	Trf2-12.5MVA 132/33kV	OPT01090	1.431877	2701	1.924566	5615.494279	19-Jan-2023 9:45
Umerkote	Trf1-20MVA 132/33kV	OPT00674	8.296087	15516	11.153343	16408.380785	25-Jan-2023 18:30
Umerkote	Trf2-20MVA 132/33kV	OPT01238	8.522929	15944	11.456550	16812.640007	25-Jan-2023 18:30
		TOTAL:	329.626711	657,068			

AT: 12-Jan-2023 7:45

GRIDCO LIMITED

(A Govt. of Odisha Undertaking)
(Formerly Grid Corporation of Orissa Limited)
Regd. Office: Janpath, Bhubaneswar-751022
Ph:0674-2541320/2540098/2540877 Fax:0674-2541904 E-mail:sgm.pp@gridco.co.in
CIN: U40109OR1995SGC003960

Ref. No.: CGM-PP-50/2022/ 198(8) Date: 03/03/2023

To

The Chief Executive Officer,
TP Southern Odisha Distribution Limited
Courtpeta, Berhampur.

Sub: Energy Bill for the Month of Feb-2023

Dear Sir,

Enclosed please find herewith the Bulk supply energy bill for the month of Feb-2023 for Rs.70,09,75,560.00 towards supply of power by GRIDCO to TPSODL.

You are requested to kindly release the payment at the earliest. The rebate for prompt payment shall be admissible as per tariff order. The Energy Flow Statement, furnished by SLDC, based on which the bill is prepared are enclosed herewith for your reference.

Thanking You.

Encl: As stated above.

Yours faithfully,
03/03/2023
GM (T&BS)

Copy to:

Nodal Officer, DISCOM Monitoring Unit (DMU), GRIDCO, Bhubaneswar
Chief Load Despatcher, SLDC, Mancheswar, Bhubaneswar.
CFO, GRIDCO, Bhubaneswar.
DGM (F) PP Branch, GRIDCO, Bhubaneswar.
DGM (R & T), GRIDCO, Bhubaneswar
Manager, Union Bank of India, Main Branch, Bhubaneswar
GUARD File

G R I D C O Limited
Registered Office: Janpath
Bhubaneswar 751022
CIN: U40109OR1995SGC003960

Bill of Supply

For TPSODL
February-2023

GRIDCO GSTIN:21AABCG5398P3Z3
Goods Description: Electricity
HSN Code: 27160000
Ref No: GRIBS/22-23/ 498

Date: 03-Mar-23
Pay By Date: 02-Apr-23

The Chief Executive Officer
TP Southern Odisha Distribution Limited
Courtpeta, Berhampur, Odisha
GSTIN: 21AAICT3239P1Z1

A. Total Energy for the month	308.799806 MU
B. SMD approved by OERC	7,20,000 kVA
SMD permitted by OERC	7,92,000 kVA
Actual SMD occured	6,52,899 kVA
Excess SMD drawal	0 kVA

Item No			Amount (Rs.)
1	Current Charges		
	(a) Bulk Supply Price @ 227 Paise per kWh for the Energy	70,09,75,569.62	
	(b) Excess Demand Charge @ Rs 250 per kVA	0.00	
	Sub Total: (a+b)		70,09,75,569.62
2	Debit/Credit Bills:		
	a) Debit Bills for the _____ vide Bill Nos._____ Dtd._____	0.00	
	Sub Total:		0.00
3	Total Current Charges: Items (1+2)		70,09,75,569.00
4	Add Delayed Payment Surcharge for the month of Feb-2023 (Annex-6)		-
5	Add: Previous amount outstanding :-		
	(i) Outstanding energy charges	1,49,14,46,260.00	
	(ii) Outstanding DPS	-	
	Total Previous Outstanding: (i+ii)		1,49,14,46,260.00
6	Less payment received during the month		
	(a) Collection for Dec '22	72,03,96,135.00	
	(b) Rebate on Dec'22	72,84,086.00	
	(c) Amount against TDS	7,28,409.00	
	(d) Other Adjustment (if any)	-	
	Total Payment and Adjustment: (a+b+c+d)		(72,84,08,630.00)
7	Total amount claimed through this bill: Item (3 to 6)		1,46,40,13,199.00
	(Rounded off to the nearest Rupee)		1,46,40,13,190.00

(Rupees one hundred forty six crore forty lakh thirteen thousand one hundred ninety only)

Checked by
DGM(F), PP

AGM (EBC)

For & on behalf of GRIDCO
GM(T&BS)

Note:

1. The BSP Bill of Supply for the month has been prepared in line with the Bulk Supply Agreement executed with TPSODL and ARR & BSP Order dated 24.03.2022 in Case No 107/2021.
2. The billing for Bulk Supply of Power has been done based on the actual energy consumption statement provided by SLDC and in line with the Clause No. 388 of the BSP order Dt.24.03.2022 of GRIDCO for FY-2022-23 in Case No.107/2021 in the matter of overdrawal by the DISCOMs and as per the rates stipulated at Clause No.384 & 392 of the said BSP Order.
3. In line with the decisions of the 98th & 99th PSOC Meetings and discussions held among GRIDCO, SLDC & WESCO Utility in the chamber of CGM(PP), in the Meeting Dtd.29.08.2018, the Energy Import by Solar Entities has been deducted from the Energy Import Figure of DISCOMs.
4. Rebate for prompt payment & Delayed Payment Surcharge shall be admissible/imposed as per the Clause No. 389 & 390 of BSP Order of GRIDCO Dt.24/03/2022 in case No.107 of 2021 of OERC and relevant provisions of Bulk Supply Agreement executed with TPSODL.
5. In case of any default in monthly BSP dues by the DISCOMs, they are liable for imposition of power regulation to the extent of non payment of monthly BSP dues as per Clause No. 385 of the BSP Order.
6. Statutory levy/duty/tax/cess/toll etc. imposed under any law from time to time shall be charged over and above the bulk supply price fixed by the Commission as per Clause No. 391 of the BSP Order.
7. Discrepancy, if any, found later on, towards the billing will be taken into account.
8. Details of the Annexures -

Annexure 1	Energy Flow Statement	Annexure 2	Station Consumption statement
Annexure 3	Open Access Statements	Annexure 4	Main/Check Comparison of Solar Plants
Annexure 5	Energy Accounting Statement of SLDC	Annexure 6	Delayed Payment Surcharge
Annexure 7	Rebate Statement	Annexure 8	Billing Consideration Statement
Annexure 9	Billing Information Statement		

STATE LOAD DESPATCH CENTRE
OFFICE OF Sr.G.M.(POWER SYSTEM) BHUBANESWAR - 751 017 FAX-0674-2748509/2478218

(Annexure - 1)

Report Generated on: 3/3/2023 11:49:50AM

ENERGY FLOW FOR : TPSODL

BILLING CYCLE FROM 01-Feb-2023 BILLING CYCLE TO 28-Feb-2023

SUBSTATION	METERING POINT	METER NO	ENERGY(MU)	SMD(KVA)	AVERAGE DEMAND(MWatts)	MAX DEMAND (KVA)	MAX DEMAND(KVA) TIME
Akhusingi	Trf1-12.5MVA 132/33kV	OPT02182	2.983761	5833	4.440120	6701.561165	13-Feb-2023 18:30
Akhusingi	Trf2-12.5MVA 132/33kV	OPT02184	2.898974	5695	4.313950	6549.642963	13-Feb-2023 18:30
Aska	Trf1-40MVA 132/33kV	OPT01167	5.750200	13642	8.556845	16411.605850	07-Feb-2023 7:45
Aska	Trf2-40MVA 132/33kV	OPT00961	5.632050	13360	8.381027	16089.798010	07-Feb-2023 7:45
Aska	Trf3-40MVA 132/33kV	OPT01457	5.643320	13352	8.397798	16168.364172	07-Feb-2023 7:45
Aska New	Trf1-40MVA 132/33kV	OPT01611	3.684290	9469	5.482574	12955.122539	14-Feb-2023 9:00
Aska New	Trf2-20MVA 132/33kV	OPT02377	2.278740	5782	3.390882	11596.466250	16-Feb-2023 9:15
Balimela	Trf1-40MVA 220/33kV	OPT01893	3.890510	7168	5.789449	9391.059578	26-Feb-2023 18:45
Balimela	Trf2-20MVA 220/33kV	OPT01895	2.568036	4683	3.821485	11603.651323	16-Feb-2023 9:15
Balugaon	Khallikote Feeder 33kV	OPT00747	6.606986	18110	9.831824	18224.100088	27-Feb-2023 19:00
Berhampur	Trf1-40MVA 132/33kV	OPT00121	7.593361	12963	11.299644	20375.756639	22-Feb-2023 18:45
Berhampur	Trf2-20MVA 132/33kV	B0004476	4.890484	8184	7.277505	10425.489441	08-Feb-2023 18:30
Berhampur	Trf3-40MVA 132/33kV	OPT00123	7.704438	13260	11.464937	16753.152668	08-Feb-2023 18:45
Bhanjanagar	Trf1-40MVA 132/33kV	OPT02084	4.071830	9109	6.059271	9413.297097	25-Feb-2023 18:45
Bhanjanagar	Trf2-16MVA 132/33kV	OPT01273	2.667153	5630	3.954097	6122.876448	25-Feb-2023 18:45
Bhanjanagar	Trf3-40MVA 132/33kV	OPT01277	4.129800	9181	6.145536	9523.864762	08-Feb-2023 7:30
Boudh	Aditya Birla Solar-I 33kV	ORU51513	2.346027	2549	3.492450	12469.120000	03-Feb-2023 13:00
Boudh	Aditya Birla Solar-II 33kV	ORU51512	2.356782	2644	3.507116	12803.320000	14-Feb-2023 13:00
Boudh	Solar extra Injection	TPSODL-02	-2.693491	-4008	-4.008171	4008.171131	01-Feb-2023 0:00
Boudh	Trf1-20MVA 132/33kV	OPT00691	1.507064	2290	2.242699	13712.000000	22-Feb-2023 14:00
Boudh	Trf2-20MVA 132/33kV	OPT00737	1.513693	2197	2.252519	17420.000000	22-Feb-2023 13:30
Chatrapur	IRE Feeder1 132kV	APM03533	1.979462	3801	2.945612	4032.346023	22-Feb-2023 20:15
Chatrapur	IRE Feeder2 132kV	APM03517	3.127360	5036	4.653810	6111.439868	15-Feb-2023 18:00
Chatrapur	Rambha Tr. Fdr 132kV	OPT00668	2.803630	7154	4.172068	12196.343374	22-Feb-2023 18:30
Chatrapur	Trf1-20MVA 132/33kV	OPT00786	5.651893	6194	8.410555	18434.138765	25-Feb-2023 16:15
Chatrapur	Trf2-20MVA 132/33kV	OPT00716	2.466084	5876	3.669768	12225.880091	16-Feb-2023 16:00
Chatrapur	Trf3-20MVA 132/33kV	OPT00107	4.061250	6589	6.043527	13402.602942	25-Feb-2023 16:30
Chikiti	Trf1-40MVA 132/33kV	OPT01593	2.958320	6773	4.402262	10630.623251	24-Feb-2023 19:00
Dabugaon	Trf1-12.5MVA 132/33kV	OPT00717	2.382871	4975	3.546088	8093.414607	15-Feb-2023 18:00
Dabugaon	Trf2-12.5MVA 132/33kV	OPT00861	2.415161	4924	3.593990	8491.841732	15-Feb-2023 9:00
Digapahandi	Trf1-20MVA 132/33kV	APM03696	4.240070	8879	6.309628	11423.610504	21-Feb-2023 7:00
Digapahandi	Trf2-20MVA 132/33kV	APM03549	4.321494	9301	6.430794	11705.641001	21-Feb-2023 7:15
Digapahandi	Trf3-12.5MVA 132/33kV	APM12597	2.763750	5856	4.112723	7450.212350	21-Feb-2023 7:00
G. UDAYAGIRI	Trf1-20MVA 132/33kV	OPT02312	1.226935	2925	1.825797	3653.178778	11-Feb-2023 18:15
G. UDAYAGIRI	Trf2-20MVA 132/33kV	OPT01437	1.197315	2838	1.781719	3544.934414	11-Feb-2023 18:15

STATE LOAD DESPATCH CENTRE
OFFICE OF Sr.G.M.(POWER SYSTEM) BHUBANESWAR - 751 017 FAX-0674-2748509/2478218

(Annexure - 1)

Report Generated on: 3/3/2023 11:49:50AM

SUBSTATION	METERING POINT	METER NO	ENERGY(MU)	SMD(KVA)	AVERAGE DEMAND(MWatts)	MAX DEMAND (KVA)	MAX DEMAND(KVA) TIME
Ganjam	GRASIM Ind. Ltd. 132kV	OPT00003	11.791138	16816	17.546336	20295.935554	12-Feb-2023 21:30
Ganjam	Trf1-20MVA 132/33kV	OPT00347	4.174887	9738	6.212629	13692.023956	03-Feb-2023 10:00
Ganjam	Trf2-12.5MVA 132/33kV	OPT00697	2.517579	5913	3.746397	8767.736278	25-Feb-2023 8:45
Govindapalli	TPSODL Feeders	TPSODL-01	1.210721	2215	1.801668	3067.920000	21-Feb-2023 19:15
Gutipita	GEDCOL Solar 2MW 33KV	ORA00072	0.288148	346	0.430279	1727.840000	14-Feb-2023 11:45
Gunupur	Trf1-20MVA 132/33kV	OPT01440	0.147099	244	0.218897	368.086946	04-Feb-2023 18:30
Gunupur	Trf2-20MVA 132/33kV	OPT01800	0.146500	240	0.218006	364.548036	04-Feb-2023 18:30
Hinjili GIS	Trf1-20MVA 132/33kV	OPT02306	1.923686	4306	2.862629	4631.030798	07-Feb-2023 7:00
Hinjili GIS	Trf2-20MVA 132/33kV	OPT02379	2.004625	4466	2.983073	4813.803272	07-Feb-2023 7:00
Jayanagar	JAYPUR PG 28KV TERTIARY	ER1599-A	0.019632	29	0.029214	29.214286	01-Feb-2023 0:00
Jayanagar	JAYPUR PG 33KV TERTIARY	ER1600-A	0.013814	21	0.020557	20.556548	01-Feb-2023 0:00
Jayanagar	JAYPUR PG 430V TERTIARY	NP5965-A	0.031961	48	0.047561	47.561012	01-Feb-2023 0:00
Jayanagar	Traction Feeder 132kV	OPT00932	7.823780	22002	11.642530	32074.238884	08-Feb-2023 23:30
Jayanagar	Trf1-12.5MVA 132/33kV	OPT00917	3.673189	7334	5.466055	9790.419807	06-Feb-2023 11:00
Jayanagar	Trf2-20MVA 132/33kV	OPT01052	5.180961	10559	7.680001	14131.567500	06-Feb-2023 11:00
Jayanagar	Trf3-20MVA 132/33kV	APM12635	5.238598	10189	7.795533	14249.101192	06-Feb-2023 11:15
Jayanagar	Trf4-20MVA 132/33kV	OPT02172	5.249370	10739	7.811562	13796.250739	04-Feb-2023 11:45
Kalimela	Trf1-20MVA 220/33kV	OPT02260	1.783097	3612	2.653419	7352.778511	12-Feb-2023 18:45
Kalimela	Trf2-20MVA 220/33kV	OPT02262	1.501386	3606	2.234205	7466.782599	23-Feb-2023 7:45
Kesipur	220/33KV 20MVA TRF 1	OPT01473	0.650916	1788	0.968625	1906.724941	21-Feb-2023 18:45
Laxmipur	Laxmipur RTSS 220kV	OPT02254	1.090857	4557	1.623299	9734.326739	04-Feb-2023 21:30
Laxmipur	Trf1-20MVA 220/33kV	OPT00741	3.294506	11237	4.902539	12010.294917	16-Feb-2023 7:30
Laxmipur	TRF2-20MVA 220/33KV	OPT01479	0.983130	4	1.462991	10902.101082	26-Feb-2023 7:15
Laxmipur	UTKAL ALUMINA Fdr-1 220kV	OPT00819	0.064770	5490	0.096384	7922.524850	22-Feb-2023 6:30
Laxmipur	UTKAL ALUMINA Fdr-2 220kV	OPT00875	0.603960	9676	0.898735	14161.242683	05-Feb-2023 17:00
Malkangiri	Trf1-40MVA 220/33kV	OPT01779	1.568650	2891	2.334301	4962.579974	03-Feb-2023 12:45
Malkangiri	Trf2-40MVA 220/33kV	OPT00710	1.598250	2940	2.378348	6225.881464	03-Feb-2023 8:30
Meenakshi s/w	Megalift Feeder 33kV	OPT01557	0.016724	4	0.024887	462.964361	21-Feb-2023 11:30
Mohana	Trf1-12.5MVA 132/33kV	OPT01794	1.678523	3599	2.497802	4274.562902	20-Feb-2023 18:45
Mohana	Trf2-12.5MVA 132/33kV	OPT01886	1.582474	3392	2.354872	4039.170212	20-Feb-2023 18:45
Muniguda	Bissam-Cuttack Tr.132kV	OPT01798	4.133050	12208	6.150372	22132.582317	06-Feb-2023 3:45
Muniguda	Trf1- 12.5MVA 132/33kV	OPT02161	3.285758	6665	4.889521	7238.445067	25-Feb-2023 18:45
Nabarangpur	Trf1-20MVA 132/33kV	OPT02258	3.706063	14928	5.515004	15312.046478	17-Feb-2023 8:00
Narendrapur	220 KV TATA Feeder-I	OREB0362	0.000000	0	0.000000	0.000000	01-Feb-2023 0:00
Narendrapur	220 KV TATA Feeder-II	OREB0350	16.403006	25638	24.409233	25695.883136	24-Feb-2023 2:00
Narendrapur	Narendrapur Traction 132kV	OPT00859	2.916870	5037	4.340580	12727.607788	27-Feb-2023 11:30
Narendrapur	Trf1-20MVA 132/33kV	OPT01837	2.313051	4151	3.442040	8342.639391	24-Feb-2023 11:30
Narendrapur	Trf2-40MVA 132/33kV	OPT00876	3.733110	6720	5.555223	9666.602299	04-Feb-2023 8:30
Narendrapur	Trf3-40MVA 132/33kV	OPT00856	4.701150	8677	6.995759	10379.209989	21-Feb-2023 18:30
Narendrapur	Trf4-40MVA 132/33kV	OPT01810	3.836020	6885	5.708363	9907.815097	04-Feb-2023 8:00

STATE LOAD DESPATCH CENTRE

OFFICE OF Sr.G.M.(POWER SYSTEM) BHUBANESWAR - 751 017 FAX-0674-2748509/2478218

(Annexure - 1)

Report Generated on: 3/3/2023 11:49:50AM

SUBSTATION	METERING POINT	METER NO	ENERGY(MU)	SMD(KVA)	AVERAGE DEMAND(MWatts)	MAX DEMAND (KVA)	MAX DEMAND(KVA) TIME
Paralakhemendi	Trf1-12.5MVA 132/33kV	OPT01956	2.360585	4549	3.497894	6490.344829	13-Feb-2023 19:00
Paralakhemendi	Trf2-12.5MVA 132/33kV	OPT01959	2.371877	4630	3.529579	6709.954396	13-Feb-2023 19:00
Paralakhemendi	Trf3-12.5MVA 132/33kV	OPT00537	2.479945	4769	3.690394	6823.943728	13-Feb-2023 19:00
Phulbani	Trf1-40MVA 132/33kV	OPT01879	2.633130	7284	3.918348	11241.708055	16-Feb-2023 10:15
Phulbani	Trf2-12.5MVA 132/33kV	OPT01880	1.344429	2465	2.000638	5921.837553	11-Feb-2023 18:45
Phulbani	Trf3-40MVA 132/33kV	OPT01883	3.991850	6695	5.940253	15971.023762	11-Feb-2023 18:45
Podagada	Trf1-20MVA 132/33kV	OPT02348	3.455614	8330	5.142283	8810.835343	08-Feb-2023 7:45
Podagada	Trf2-12.5MVA 132/33kV	OPT01802	2.208084	5301	3.285839	5613.241488	08-Feb-2023 7:45
Polangi	Trf1-40MVA 132/33kV	OPT00247	1.917726	3648	2.853759	6625.319902	16-Feb-2023 7:45
Purushottampur	Trf1-12.5MVA 132/33kV	OPT00151	1.938372	4428	2.884482	6131.129745	04-Feb-2023 7:30
Purushottampur	Trf2-12.5MVA 132/33kV	OPT00156	1.978275	4548	2.943862	5155.210122	17-Feb-2023 9:45
Purushottampur	Trf3-20MVA 132/33kV	OPT01795	3.131494	6988	4.658961	9810.547793	04-Feb-2023 7:15
Rayagada	Traction Feeder 132KV	OPT01292	3.628120	2300	5.398988	15763.246396	22-Feb-2023 19:00
Rayagada	Trf1-12.5MVA 132/33kV	OPT01846	1.668649	3581	2.483109	4130.685173	23-Feb-2023 8:45
Rayagada	Trf2-12.5MVA 132/33kV	OPT01848	1.394687	3013	2.075427	3347.780160	23-Feb-2023 9:00
Rayagada	Trf3-20MVA 132/33kV	OPT01809	2.333742	5113	3.472830	5859.477110	23-Feb-2023 8:45
Sonepur	Manamunda Feeder 33kV	OPT01720	5.973266	13129	8.888789	14546.064760	15-Feb-2023 18:15
Sunabeda	HAL Feeder 132kV	OPT01892	2.882940	4278	4.290090	8588.427563	02-Feb-2023 18:30
Sunabeda	Trf1-12.5MVA 132/33kV	OPT01890	2.350714	5758	3.498086	8860.198643	20-Feb-2023 9:30
Sunabeda	Trf2-12.5MVA 132/33kV	OPT01889	2.286317	5688	3.402257	8565.348796	20-Feb-2023 9:30
Sunabeda	Trf3-20MVA 132/33kV	OPT01891	3.598936	8995	5.355560	11405.498323	17-Feb-2023 9:15
Tentulikhunti	Mukhiguda Fdr 33KV	OPT01790	-0.351825	-120	-0.523549	1279.312315	28-Feb-2023 18:15
Tentulikhunti	Trf1-20MVA 132/33kV	OPT01900	2.790065	2658	4.151882	6940.701962	09-Feb-2023 9:15
Tentulikhunti	Trf2-20MVA 132/33kV	OPT01902	2.694769	2524	4.010073	6703.775653	09-Feb-2023 9:15
Tentulikhunti	Trf3-20 MVA 132/33kV	APM12627	1.814721	1648	2.700478	4509.941276	09-Feb-2023 9:30
Tentulikhunti	Vento Energy Infra Pvt Ltd Solar 132KV	Y0638636	0.031350	8080	0.046652	36600.000000	14-Feb-2023 11:45
Theruball	Bhalumaska RTSS 132kV	OPT01439	1.355000	4561	2.016369	14091.131983	18-Feb-2023 13:00
Theruball	JK Feeder 132kV(Biomass)	OPT01669	0.003193	48	0.004751	1800.000000	03-Feb-2023 17:30
Theruball	Trf1-12.5MVA 132/33kV	OPT01388	1.583309	2842	2.356115	4245.253349	15-Feb-2023 16:30
Theruball	Trf2-12.5MVA 132/33kV	OPT01090	1.479997	2693	2.202376	4007.980040	16-Feb-2023 9:15
Umerkote	Trf1-20MVA 132/33kV	OPT00674	8.427298	16898	12.540622	18356.056221	28-Feb-2023 7:45
Umerkote	Trf2-20MVA 132/33kV	OPT01238	8.655865	17014	12.880751	18885.587732	28-Feb-2023 7:30
		TOTAL:	316.875137	665,681			
		AT:	17-Feb-2023 7:30				

STATE LOAD DESPATCH CENTRE
OFFICE OF Sr.G.M.(POWER SYSTEM) BHUBANESWAR - 751 017 FAX-0674-2748509/2478218

(Annexure - 1)

Report Generated on: 3/3/2023 11:49:50AM

SUBSTATION	METERING POINT	METER NO	ENERGY(MU)	SMD(KVA)	AVERAGE DEMAND(MWatts)	MAX DEMAND (KVA)	MAX DEMAND(KVA) TIME

DETAILS

TOTAL ENERGY CONSUMED	316.875137
STATION CONSUMPTION	0.342388
NET CONSUMPTION	316.532749

GRIDCO LIMITED

(A Govt. of Odisha Undertaking)
(Formerly Grid Corporation of Orissa Limited)
Regd. Office: Janpath, Bhubaneswar-751022
Ph:0674-2541320/2540098/2540877 Fax:0674-2541904 E-mail:sgm.pp@gridco.co.in
CIN: U40109OR1995SGC003960

Ref. No.: CGM-PP-50/2022/ 314(8) Date: 04.04.2023

To

The Chief Executive Officer,
TP Southern Odisha Distribution Limited
Courtpeta, Berhampur.

Sub: Energy Bill for the Month of Mar-2023

Dear Sir,

Enclosed please find herewith the Bulk supply energy bill for the month of Mar-2023 for Rs.75,95,72,575.00 towards supply of power by GRIDCO to TPSODL.

You are requested to kindly release the payment at the earliest. The rebate for prompt payment shall be admissible as per tariff order. The Energy Flow Statement, furnished by SLDC, based on which the bill is prepared are enclosed herewith for your reference.

Thanking You.

Encl: As stated above.

Yours faithfully,

04/04/2023

GM (T&BS)

Copy to:

Nodal Officer, DISCOM Monitoring Unit (DMU), GRIDCO, Bhubaneswar
Chief Load Despatcher, SLDC, Mancheswar, Bhubaneswar.
CFO, GRIDCO, Bhubaneswar.
DGM (F) PP Branch, GRIDCO, Bhubaneswar.
DGM (R & T), GRIDCO, Bhubaneswar
Manager, Union Bank of India, Main Branch, Bhubaneswar
GUARD File

G R I D C O Limited

Registered Office: Janpath
Bhubaneswar 751022
CIN: U40109OR1995SGC003960

Bill of Supply

For TPSODL
March 2023

GRIDCO GSTIN:21AABCG5398P3Z3
Goods Description: Electricity
HSN Code: 27160000
Ref No: GRIBS/23-24/ 001

Date: 04-Apr-23
Pay By Date: 04-May-23

The Chief Executive Officer
TP Southern Odisha Distribution Limited
Courtpeta, Berhampur, Odisha
GSTIN: 21AAICT3239P1Z1

A. Total Energy for the month	354.573661 MU
B. SMD approved by OERC	7,20,000 kVA
SMD permitted by OERC	7,92,000 kVA
Actual SMD occurred	6,84,692 kVA
Excess SMD drawal	0 kVA

Item No			Amount (Rs.)
1	Current Charges		
	(a) Bulk Supply Price @ 227 Paise per kWh for the Energy	80,48,82,210.47	
	(b) Excess Demand Charge @ Rs 250 per kVA	0.00	
	Sub Total: (a+b)		80,48,82,210.47
2	Debit/Credit Bills:		
	a) Credit Bills for the months from Apr-2022 to Jan-2023 vide Bill Nos GRIBS/22-23/536 to 545 Dtd 23.03.2023	(4,53,09,635.00)	
	Sub Total:		(4,53,09,635.00)
3	Total Current Charges: Items (1+2)		75,95,72,575.00
4	Add Delayed Payment Surcharge for the month of Mar-2023 (Annex-6)		-
5	Add: Previous amount outstanding :-		
	(i) Outstanding energy charges	1,46,40,13,190.00	
	(ii) Outstanding DPS	-	
	Total Previous Outstanding: (i+ii)		1,46,40,13,190.00
6	Less payment received during the month		
	(a) Collection for Jan '23 and Feb'23	1,44,73,09,044.00	
	(b) Rebate on Jan'23 and Feb'23	1,46,40,132.00	
	(c) Amount against TDS	14,64,014.00	
	(d) Other Adjustment (if any)	0.00	
	Total Payment and Adjustment: (a+b+c+d)		(1,46,40,13,190.00)
7	Total amount claimed through this bill: Item (3 to 6)		75,95,72,575.00
	(Rounded off to the nearest Rupee)		75,95,72,575.00

(Rupees seventy five crore ninety five lakh seventy two thousand five hundred seventy five only)

Checked by

DGM(F), PP

AGM (EBC)

For & on behalf of GRIDCO

GM(T&BS)

Note:

1. The BSP Bill of Supply for the month has been prepared in line with the Bulk Supply Agreement executed with TPSODL and ARR & BSP Order dated 24.03.2022 in Case No 107/2021.
2. The billing for Bulk Supply of Power has been done based on the actual energy consumption statement provided by SLDC and in line with the Clause No. 388 of the BSP order Dt.24.03.2022 of GRIDCO for FY-2022-23 in Case No.107/2021 in the matter of overdrawal by the DISCOMs and as per the rates stipulated at Clause No.384 & 392 of the said BSP Order.
3. In line with the decisions of the 98th & 99th PSOC Meetings and discussions held among GRIDCO, SLDC & WESCO Utility in the chamber of COM/PP), in the Meeting Dtd.29.08.2018, the Energy Import by Solar Entities has been deducted from the Energy Import Figure of DISCOMs.
4. Rebate for prompt payment & Delayed Payment Surcharge shall be admissible/imposed as per the Clause No. 389 & 390 of BSP Order of GRIDCO Dt.24/03/2022 in case No.107 of 2021 of OERC and relevant provisions of Bulk Supply Agreement executed with TPSODL.
5. In case of any default in monthly BSP dues by the DISCOMs, they are liable for imposition of power regulation to the extent of non payment of monthly BSP dues as per Clause No. 385 of the BSP Order.
6. Statutory levy/duty/tax/cess/toll etc. imposed under any law from time to time shall be charged over and above the bulk supply price fixed by the Commission as per Clause No. 391 of the BSP Order.
7. Discrepancy, if any, found later on, towards the billing will be taken into account.
8. **Details of the Annexures -**

Annexure 1	Energy Flow Statement	Annexure 2	Station Consumption statement
Annexure 3	Open Access Statements	Annexure 4	Main/Check Comparison of Solar Plants
Annexure 5	Energy Accounting Statement of SLDC	Annexure 6	Delayed Payment Surcharge
Annexure 7	Rebate Statement	Annexure 8	Billing Consideration Statement
Annexure 9	Billing information Statement		

STATE LOAD DESPATCH CENTRE
OFFICE OF Sr.G.M.(POWER SYSTEM) BHUBANESWAR - 751 017 FAX-0674-2748509/2478218

(Annexure - 1)

Report Generated on: 4/4/2023 5:35:13PM

ENERGY FLOW FOR : TPSODL

BILLING CYCLE FROM 01-Mar-2023 **BILLING CYCLE TO** 31-Mar-2023

SUBSTATION	METERING POINT	METER NO	ENERGY(MU)	SMD(KVA)	AVERAGE DEMAND(MWatts)	MAX DEMAND (KVA)	MAX DEMAND(KVA) TIME
Akhusingi	Trf1-12.5MVA 132/33kV	OPT02182	2.414168	5844	3.244846	6622.023633	05-Mar-2023 18:45
Akhusingi	Trf2-12.5MVA 132/33kV	OPT02184	2.545406	5707	3.421245	6370.125167	05-Mar-2023 18:45
Aska	Trf1-40MVA 132/33kV	OPT01167	7.042490	12146	9.465712	20749.515657	18-Mar-2023 9:00
Aska	Trf2-40MVA 132/33kV	OPT00961	6.929120	11909	9.313333	20357.956875	18-Mar-2023 9:00
Aska	Trf3-40MVA 132/33kV	OPT01457	6.822020	11943	9.169382	18067.119306	20-Mar-2023 16:15
Aska New	Trf1-40MVA 132/33kV	OPT01811	4.335600	8449	5.827419	10751.297596	20-Mar-2023 10:00
Aska New	Trf2-20MVA 132/33kV	OPT02377	2.699443	5137	3.628283	12352.371518	15-Mar-2023 9:30
Balimela	Trf1-40MVA 220/33kV	OPT01894	4.181950	7174	5.620901	6708.246963	14-Mar-2023 12:00
Balimela	Trf2-20MVA 220/33kV	OPT01886	2.737941	4859	3.680028	9959.611237	14-Mar-2023 18:00
Balugaon .	Khallikote Feeder 33kV	OPT00747	8.480978	16908	11.399164	19722.281815	04-Mar-2023 18:30
Berhampur	Trf1-40MVA 132/33kV	OPT00121	9.082956	15210	12.208275	18454.857296	20-Mar-2023 12:45
Berhampur	Trf2-20MVA 132/33kV	B0004476	5.857488	9645	7.872987	15222.649654	16-Mar-2023 21:30
Berhampur	Trf3-40MVA 132/33kV	OPT00123	9.655213	15513	12.977436	24398.105235	16-Mar-2023 21:30
Bhanjanagar	Trf1-40MVA 132/33kV	OPT02084	5.051561	9118	6.789733	9672.795286	25-Mar-2023 20:00
Bhanjanagar	Trf2-16MVA 132/33kV	OPT01273	3.279788	5943	4.408315	8276.178455	25-Mar-2023 20:00
Bhanjanagar	Trf3-40MVA 132/33kV	OPT01277	5.113840	9221	6.873441	9765.406338	28-Mar-2023 19:15
Boudh	Aditya Birla Solar-I 33kV	ORU51513	2.292713	0	3.081604	12937.120000	21-Mar-2023 13:00
Boudh	Aditya Birla Solar-II 33kV	ORU51512	2.277769	0	3.061517	12709.760000	30-Mar-2023 10:45
Boudh	Solar extra Injection	TPSODL-02	-2.469803	-3320	-3.319628	3319.627688	01-Mar-2023 0:00
Boudh	Trf1-20MVA 132/33kV	OPT01155	1.742250	3842	2.341734	11168.000000	06-Mar-2023 13:00
Boudh	Trf2-20MVA 132/33kV	OPT00858	1.741528	3857	2.340763	11236.000000	06-Mar-2023 13:00
Chatrapur	IRE Feeder1 132kV	APM03533	2.296430	2989	3.086600	3990.350911	07-Mar-2023 18:30
Chatrapur	IRE Feeder2 132kV	APM03517	3.470495	5481	4.664844	6744.660070	22-Mar-2023 18:30
Chatrapur	Rambha Tr. Fdr 132kV	OPT00688	3.287110	7341	4.418159	11101.639519	01-Mar-2023 4:30
Chatrapur	Trf1-20MVA 132/33kV	OPT00786	6.995978	14388	9.403196	17156.757269	15-Mar-2023 6:45
Chatrapur	Trf2-20MVA 132/33kV	OPT00715	1.819184	0	2.445113	16492.789597	28-Mar-2023 20:15
Chatrapur	Trf3-20MVA 132/33kV	OPT00107	5.858253	9820	7.887437	13134.004352	28-Mar-2023 20:15
Chikiti	Trf1-40MVA 132/33kV	OPT01503	4.231870	7394	5.687997	9531.505852	18-Mar-2023 18:15
Dabugaon	Trf1-12.5MVA 132/33kV	OPT00717	2.309721	4562	3.104484	6028.502966	13-Mar-2023 7:15
Dabugaon	Trf2-12.5MVA 132/33kV	OPT00601	2.318368	4624	3.116086	5978.628606	13-Mar-2023 7:15
Digapahandi	Trf1-20MVA 132/33kV	APM03698	4.760880	8527	6.399033	11502.736172	24-Mar-2023 9:15
Digapahandi	Trf2-20MVA 132/33kV	APM03549	4.911584	8853	6.601592	13868.317304	04-Mar-2023 7:15
Digapahandi	Trf3-12.5MVA 132/33kV	APM12597	3.146928	5642	4.229742	8690.408686	04-Mar-2023 7:00
G. UDAYAGIRI	Trf1-20MVA 132/33kV	OPT02312	1.257678	2691	1.690428	4105.751569	26-Mar-2023 18:45
G. UDAYAGIRI	Trf2-20MVA 132/33kV	OPT01437	1.228811	2612	1.651628	5260.436484	27-Mar-2023 18:30

STATE LOAD DESPATCH CENTRE
OFFICE OF Sr.G.M.(POWER SYSTEM) BHUBANESWAR - 751 017 FAX-0674-2748509/2478218

(Annexure - 1)

Report Generated on: 4/4/2023 5:35:13PM

SUBSTATION	METERING POINT	METER NO	ENERGY(MU)	SMD(KVA)	AVERAGE DEMAND(MWatts)	MAX DEMAND (KVA)	MAX DEMAND(KVA) TIME
Ganjam	GRASIM Ind. Ltd. 132kV	OPT00003	13.544025	21306	18.204335	21406.997250	06-Mar-2023 19:45
Ganjam	Trf1-20MVA 132/33kV	OPT00347	4.406626	6771	5.922884	10908.318278	16-Mar-2023 8:30
Ganjam	Trf2-12.5MVA 132/33kV	OPT00697	2.696174	5318	3.623890	6547.675673	16-Mar-2023 8:30
Govindapalli	TPSCOL Feeders	TPSODL-01	1.515921	2445	2.037528	3293.760000	29-Mar-2023 21:00
Gunjipita	GEDCOL Solar 2MW 33KV	ORA00072	0.286282	0	0.384788	1742.360000	20-Mar-2023 11:45
Gurupur	Trf1-20MVA 132/33kV	OPT01440	1.079131	313	1.450445	4014.687036	23-Mar-2023 12:15
Gurupur	Trf2-20MVA 132/33kV	OPT01600	1.112023	317	1.494655	4981.593319	28-Mar-2023 12:45
Hinjili GIS	Trf1-20MVA 132/33kV	OPT02306	2.194099	3424	2.949058	4543.576086	26-Mar-2023 6:45
Hinjili GIS	Trf2-20MVA 132/33kV	OPT02379	2.290046	3568	3.078019	4715.557085	26-Mar-2023 6:45
Jayanagar	JAYPUR PG 28KV TERTIARY	ER1599-A	0.026447	36	0.035547	35.547043	01-Mar-2023 0:00
Jayanagar	JAYPUR PG 33KV TERTIARY	ER1600-A	0.028341	38	0.038093	38.092742	01-Mar-2023 0:00
Jayanagar	JAYPUR PG 430V TERTIARY	NP5965-A	0.055621	75	0.074759	74.759409	01-Mar-2023 0:00
Jayanagar	Traction Feeder 132kV	OPT00932	9.761180	26302	13.119866	35127.402409	17-Mar-2023 4:30
Jayanagar	Trf1-12.5MVA 132/33kV	OPT00917	3.921928	7345	5.271409	8826.920641	28-Mar-2023 11:30
Jayanagar	Trf2-20MVA 132/33kV	OPT01052	5.596302	10587	7.508470	12773.653510	28-Mar-2023 11:30
Jayanagar	Trf3-20MVA 132/33kV	APM12635	5.596595	10747	7.522306	11177.866353	04-Mar-2023 11:00
Jayanagar	Trf4-20MVA 132/33kV	OPT02172	5.683811	10848	7.639531	13032.127680	28-Mar-2023 11:30
Kalimela	Trf1-20MVA 220/33kV	OPT02260	1.911153	3711	2.568754	4273.931713	29-Mar-2023 19:00
Kalimela	Trf2-20MVA 220/33kV	OPT02262	1.906231	3709	2.562138	4269.752110	29-Mar-2023 19:15
Kasipur	220/33KV 20MVA TRF 1	OPT01473	0.588282	1115	0.790675	2228.402116	12-Mar-2023 9:45
Laxmipur	Laxmipur RTSS 220kV	OPT02254	1.488277	3093	2.000373	12143.573247	18-Mar-2023 3:15
Laxmipur	Trf1-20MVA 220/33kV	OPT00741	0.068656	0	0.092280	5176.448658	01-Mar-2023 6:45
Laxmipur	TRF2-20MVA 220/33KV	OPT01479	4.128435	8778	5.548972	10901.544111	03-Mar-2023 7:30
Laxmipur	UTKAL ALUMINA Fdr-1 220kV	OPT00819	0.010370	4640	0.013938	5736.886117	18-Mar-2023 19:45
Laxmipur	UTKAL ALUMINA Fdr-2 220kV	OPT00875	0.562350	5121	0.755847	24921.572984	30-Mar-2023 4:45
Malkangiri	Trf1-40MVA 220/33kV	OPT01779	2.002680	3350	2.691774	4040.000000	27-Mar-2023 22:45
Malkangiri	Trf2-40MVA 220/33kV	OPT00710	2.026150	3381	2.723320	4071.559898	27-Mar-2023 22:45
Meenakshi s/s	Megalift Feeder 33kV	OPT01557	0.014738	4	0.019809	506.122515	11-Mar-2023 13:30
Mohana	Trf1-12.5MVA 132/33kV	OPT01784	1.847628	3604	2.483371	3976.002012	09-Mar-2023 19:00
Mohana	Trf2-12.5MVA 132/33kV	OPT01888	1.744135	3388	2.344267	3958.490621	22-Mar-2023 11:00
Muniguda	Bissam-Cuttack Tr.132kV	OPT01798	4.778480	9800	6.422888	23792.435773	01-Mar-2023 7:45
Muniguda	Trf1- 12.5MVA 132/33kV	OPT02161	3.660328	5029	4.919796	7605.722011	30-Mar-2023 18:45
Nabarangpur	Trf1-20MVA 132/33kV	OPT02258	4.587916	6826	6.166554	13500.454186	26-Mar-2023 10:00
Narendrapur	220 KV TATA Feeder-I	OREB9352	0.000000	0	0.000000	0.000000	01-Mar-2023 0:00
Narendrapur	220 KV TATA Feeder-II	OREB9350	17.512267	23783	23.537983	26293.847189	22-Mar-2023 20:15
Narendrapur	Narendrapur Traction 132kV	OPT00859	3.291640	3918	4.424247	11264.102272	08-Mar-2023 11:30
Narendrapur	Trf1-20MVA 132/33kV	OPT01837	2.977721	4771	4.002313	6474.847334	24-Mar-2023 12:45
Narendrapur	Trf2-40MVA 132/33kV	OPT00676	4.814480	7751	6.471075	10456.003060	24-Mar-2023 15:15
Narendrapur	Trf3-40MVA 132/33kV	OPT00866	6.177500	10104	8.303091	13813.963950	24-Mar-2023 12:30
Narendrapur	Trf4-40MVA 132/33kV	OPT01810	4.966510	7798	6.661976	11682.465493	24-Mar-2023 12:30

STATE LOAD DESPATCH CENTRE
OFFICE OF Sr.G.M.(POWER SYSTEM) BHUBANESWAR - 751 017 FAX-0674-2748509/2478218

(Annexure - 1)

Report Generated on: 4/4/2023 5:35:13PM

SUBSTATION	METERING POINT	METER NO	ENERGY(MU)	SMD(KVA)	AVERAGE DEMAND(MWatts)	MAX DEMAND (KVA)	MAX DEMAND(KVA) TIME
Paralakhemendi	Trf1-12.5MVA 132/33kV	OPT01966	2.708441	4601	3.640378	5598.955617	10-Mar-2023 18:30
Paralakhemendi	Trf2-12.5MVA 132/33kV	OPT01969	2.732913	4634	3.673270	5720.398588	10-Mar-2023 18:45
Paralakhemendi	Trf3-12.5MVA 132/33kV	OPT00637	2.862313	4849	3.847195	5902.022704	10-Mar-2023 18:30
Phulbani	Trf1-40MVA 132/33kV	OPT01879	4.081880	8092	5.486398	9374.433316	24-Mar-2023 19:15
Phulbani	Trf2-12.5MVA 132/33kV	OPT01880	1.400079	2714	1.881827	3204.421945	24-Mar-2023 19:00
Phulbani	Trf3-40MVA 132/33kV	OPT01883	3.691140	7220	4.961210	8548.871271	24-Mar-2023 19:00
Podagada	Trf1-20MVA 132/33kV	OPT02348	3.622079	7194	4.869192	10712.039281	16-Mar-2023 9:45
Podagada	Trf2-12.5MVA 132/33kV	OPT01803	2.291397	4630	3.079835	5472.463431	01-Mar-2023 7:30
Potangi	Trf1-40MVA 132/33kV	OPT00247	1.577228	2895	2.119930	5808.296711	28-Mar-2023 8:30
Purushottampur	Trf1-12.5MVA 132/33kV	OPT00151	2.381817	3968	3.201367	7444.865051	10-Mar-2023 7:45
Purushottampur	Trf2-12.5MVA 132/33kV	OPT00156	2.446554	4083	3.288379	7618.171251	10-Mar-2023 7:45
Purushottampur	Trf3-20MVA 132/33kV	OPT01795	3.794549	6292	5.100200	10119.257167	31-Mar-2023 7:45
Rayagada	Traction Feeder 132kV	OPT01292	4.213760	8698	5.663656	17190.927840	28-Mar-2023 7:15
Rayagada	Trf1-12.5MVA 132/33kV	OPT01846	1.479836	3460	1.989026	5531.039585	22-Mar-2023 10:30
Rayagada	Trf2-12.5MVA 132/33kV	OPT01849	1.878756	2940	2.525210	4678.803266	22-Mar-2023 15:30
Rayagada	Trf3-20MVA 132/33kV	OPT01808	3.157447	4926	4.243880	8808.142598	22-Mar-2023 12:30
Sonepur	Manamunda Feeder 33kV	OPT01720	6.667886	13139	8.962212	14654.983589	30-Mar-2023 16:30
Sunabeda	HAL Feeder 132kV	OPT01892	3.524536	8268	4.737280	11527.709226	17-Mar-2023 9:15
Sunabeda	Trf1-12.5MVA 132/33kV	OPT01890	2.341793	4436	3.147571	5721.954911	04-Mar-2023 7:15
Sunabeda	Trf2-12.5MVA 132/33kV	OPT01889	2.271249	4285	3.052754	5546.580029	04-Mar-2023 7:15
Sunabeda	Trf3-20MVA 132/33kV	OPT01891	3.631942	6925	4.881642	8925.738085	04-Mar-2023 7:15
Tentulikhunti	Mukhiguda Fdr 33KV	OPT01790	-0.395529	-1117	-0.531625	1160.945771	12-Mar-2023 17:45
Tentulikhunti	Trf1-20MVA 132/33kV	OPT01901	2.719297	6078	3.654969	7752.264185	01-Mar-2023 13:00
Tentulikhunti	Trf2-20MVA 132/33kV	OPT01902	2.587333	5856	3.477698	9803.905344	01-Mar-2023 10:15
Tentulikhunti	Trf3-20 MVA 132/33kV	APM12627	1.750453	3924	2.352760	6494.580072	01-Mar-2023 10:45
Tentulikhunti	Vanco Energy Infra Pvt Ltd Solar 132KV	Y0539536	0.033250	330	0.044691	37440.000000	31-Mar-2023 12:00
Theruball	Bhalumaska RTSS 132kV	OPT01439	1.858800	2561	2.497984	16890.116838	29-Mar-2023 7:15
Theruball	JK Feeder 132kV(Biomass)	OPT01668	0.150777	48	0.202657	9015.860278	25-Mar-2023 19:30
Theruball	Trf1-12.5MVA 132/33kV	OPT01398	1.991445	3866	2.676673	6463.001160	02-Mar-2023 11:45
Theruball	Trf2-12.5MVA 132/33kV	OPT01090	1.811282	3653	2.434519	4561.522553	10-Mar-2023 9:00
Umerkote	Trf1-20MVA 132/33kV	OPT00674	8.104143	17349	10.892865	18437.662263	05-Mar-2023 20:00
Umerkote	Trf2-20MVA 132/33kV	OPT01238	8.326053	17876	11.190831	18906.196233	05-Mar-2023 20:00
		TOTAL:	362.253342	657,925			

AT: 06-Mar-2023 19:00

STATE LOAD DESPATCH CENTRE

OFFICE OF Sr.G.M.(POWER SYSTEM) BHUBANESWAR - 751 017 FAX-0674-2748509/2478218

(Annexure - 1)

Report Generated on: 4/4/2023 5:35:13PM

SUBSTATION	METERING POINT	METER NO	ENERGY(MU)	SMD(KVA)	AVERAGE DEMAND(MWatts)	MAX DEMAND (KVA)	MAX DEMAND(KVA) TIME

DETAILS

TOTAL ENERGY CONSUMED	362.253342
STATION CONSUMPTION	0.391864
NET CONSUMPTION	361.861478

ANNEXURE – 2

(PPA Agreement)

Dated 2nd February 2021

GRIDCO Limited

TP Southern Odisha Distribution Limited

BULK SUPPLY AGREEMENT

TP SOUTHERN ODISHA DISTRIBUTION LIMITED

GRIDCO Limited Bhubaneswar-22

CONTENTS

PARTICULARS	PAGE NOS
ARTICLE – I: DEFINITIONS & INTERPRETATION	2
ARTICLE - II: TERM	6
ARTICLE - III: POWER SUPPLY PLANNING	6
ARTICLE - IV: CONDITIONS OF SALE AND SUPPLY OF ELECTRICAL ENERGY BY GRIDCO	7
ARTICLE - V: CALCULATION AND PAYMENT OF CHARGES	8
ARTICLE - VI: PAYMENT SECURITY MECHANISM	10
ARTICLE - VII: COLLECTION IN FIRST (1ST) MONTH OF OPERATIONS	11
ARTICLE - VIII: OPERATING ARRANGEMENTS, CONNECTION AND METERING	11
ARTICLE - IX: FORCE MAJEURE	11
ARTICLE - X: TERMINATION	12
ARTICLE - XI: WAIVER OF RIGHTS	13
ARTICLE - XII: DISPUTE RESOLUTION	13
ARTICLE - XIII: SEVERABILITY	13
ARTICLE - XIV: VARIATIONS	13
ARTICLE - XV: ASSIGNMENT AND SUB-CONTRACTING	13
ARTICLE - XVI: NOTICES	13
ARTICLE - XVII: GOVERNING LAW	14
ANNEXURE – A: LIST OF PPAs TIED UP BY GRIDCO	16

TP SOUTHERN ODISHA DISTRIBUTION LIMITED

GRIDCO Limited Bhubaneswar-22

भारतीय गैर न्यायिक

एक सौ रुपये

Rs. 100

रु. 100

ONE HUNDRED RUPEES

सत्यमेव जयते

भारत INDIA

INDIA NON JUDICIAL

ओड़िशा ODISHA

L 193009

THIS BULK SUPPLY AGREEMENT is made on the 2nd day of February 2021, which is effective from 01.01.2021.

BETWEEN

GRIDCO LIMITED CIN L40109OR1995SGC003960, a State Government of Odisha owned company incorporated under the provisions of Companies Act, 1956 having its registered office at Janpath, Bhoi Nagar, Bhubaneswar, Odisha 751022, acting through its authorized signatory Director (F & CA), GRIDCO, duly authorized vide resolution dated 22.12.2020 passed by the Board of Directors,(**"GRIDCO"**), which term or expression shall, unless it be contrary to or repugnant to the context or meaning thereof, be deemed to mean and include its successors, administrators, legal representatives, nominees and assignees. of the First Part;

AND

TP Southern Odisha Distribution Limited with **CIN U40300OR2020SGC035195**, a company registered under the provision of Companies Act, 2013,having its registered office at Kamapalli, Courtpeta Berhampur Ganjam, Odisha – 760004 acting through its authorized signatory Mr. Arvind Singh, Chief Executive Officer, duly authorized vide resolution dated 01.01.2021 passed by the Board of Directors, **TP Southern Odisha Distribution Limited ('TPSODL' hereinafter)**,which term or expression shall, unless it be contrary to or repugnant to the context or meaning thereof, be deemed to mean and include its successors, administrators, legal representatives, nominees and assignees. of the Second part;

Each of GRIDCO and TPSODL shall, wherever the context requires be jointly referred to as the Parties and individually as the Party.

WHEREAS:

(A) The Odisha Electricity Regulatory Commission **(the "Commission")** has been constituted under the Orissa Electricity Reform Act, 1995 **("Reform Act")** for the purposes of regulating the electricity industry in the State of Odisha including the issue of licences to undertake transmission, distribution or supply of electricity in the State.

TP SOUTHERN ODISHA DISTRIBUTION LIMITED

GRIDCO Limited Bhubaneswar-22

(B) Pursuant to the Commission's order dated 28.12.2020, the SOUTHCO Utility has been vested to the TPSODL as per provisions of Section 21 of the Electricity Act 2003 (**"Act"**)

(C) GRIDCO Ltd, holder of Bulk Supply License No. (No. 2/97) (**"Bulk Supply License"**) granted by the Commission, is a Deemed Trading Licensee under 5th Proviso to Section 14 of the Act.

(D) GRIDCO is engaged in the business of purchase of electricity in bulk from various generators located in & outside Odisha and the State share of power from the Central Generators for supply in bulk to the four Electricity Distribution Utilities in the State of Odisha. (**"Bulk Supply Business"**)

(E) TPSODL is the holder of a distribution and retail supply licence No. 2/99(**"Retail Supply Licence"**) granted by the Commission vide order dated 31.03.1999. In accordance with the said order, the TPSODL conducts its business of distribution and retail supply of electricity (**"Retail Supply Business"**) in the southern zone of Odisha covering distribution circles of City, Berhampur, Aska, Bhanjanagar, Jeypore and Rayagada in the State of Odisha (**"Area of Supply"**).

(F) Pursuant to Section 26(3) of the Reform Act and in accordance with the relevant provisions of the Bulk Supply Licence, GRIDCO has implemented a Bulk Supply Price as determined and made applicable by the Commission from time to time.

(G) In accordance with OERC (Conduct of Business) Regulations, 2004 and other related Regulations and as per Section 86 (1)(a) & (b) and other applicable provisions of the Act, GRIDCO will file with the Commission full details of its calculation of the expected aggregate revenue from charges which it believes to have been permitted to recover in accordance with the terms of the Bulk Supply Price which GRIDCO shall be entitled to charge TPSODL and the terms and conditions thereof

(H) In accordance with the Bulk Supply Licence and the Retail Supply Licence, GRIDCO has undertaken to supply electricity to the TPSODL its entire demand of power (**"Bulk Electricity"**). The TPSODL has undertaken to purchase the Bulk Electricity from GRIDCO at the Bulk Supply Price.

(I) The Parties are bound to conduct their respective businesses subject to and in accordance with the regulatory control and supervision of the Commission and are required to follow the standards and codes of conduct and operation, which the Commission may from time to time prescribe.

(J) Subject to the provisions of the Act and the Regulations made hereunder, the Parties wish to record the agreement reached between them in regard to the supply of Bulk Electricity, the arrangements for invoicing by GRIDCO and payment by TPSODL and for other matters connected therewith.

NOW THEREFORE IT IS AGREED, DECLARED, COVENANTED AND RECORDED BY AND BETWEEN THE PARTIES HERETO AS FOLLOWS:

1. Definitions and Interpretation

1.1. **Definitions:** In this Agreement (including the recitals), unless the context otherwise requires, the following terms shall have the meanings given to them below:

(a) **"Act"** shall mean Electricity Act, 2003;

(b) **"Annual Notice"** shall have the meaning as ascribed to it in Clause 3.1(a);

(c) **"Area of Supply"** means the geographic area specified in the Retail Supply Licence;

(d) **"Bank"** means a Scheduled Commercial Bank referred to in Clause 6.1;

(e) **"Bill Disagreement Notice"** shall have the meaning ascribed to it in Clause 5.4(d);

TP SOUTHERN ODISHA DISTRIBUTION LIMITED

GRIDCO Limited Bhubaneswar-22

(f) **"Bill Dispute Notice"** shall have the meaning ascribed to it in Clause 5.4(b);

(g) **"Bulk Electricity"** means electrical energy provided by GRIDCO at the points of Connection of transmission system to TPSODL;

(h) **"Bulk Supply Business"** means the business of bulk supply of electricity in the State Of Odisha;

( ) **"Bulk Supply Licence"** means the Bulk Supply Licence 1997 (No. 3/97) granted to GRIDCO by the Commission;

(j) **"Bulk Supply Price"** means the price in respect of the supply of Bulk Electricity, approved or determined by the Commission and in effect from time to time in accordance with the Electricity Act , 2003 and the Bulk Supply Licence,

(k) **"Commission"** means the "Odisha Electricity Regulatory Commission";

(l) **"Connection"** means

( ) each point of interconnection from time to time between the Transmission System and the Distribution System (being at an outgoing feeder gantry of the relevant substation); or

(ii) (in the case of EHT Consumers) each point of inter connection between the Transmission System and the EHT Consumers' equipment (being either at an incoming feeder gantry or terminal at the relevant EHT Consumers' premises or at an outgoing feeder gantry of the relevant substation).

(m) **"Consumer"** means an end or final user of electricity and includes.

(i) any person whose premises are connected, for the purposes of receiving a supply of electrical energy, to the Distribution System; and

(ii) any person whose premises are connected to the Transmission System for the purpose of receiving a supply of electrical energy at voltage of 33 kV or over, which supply is not resold by such person;

(n) **"Current Dues"** means the monthly bulk supply bill dues along with the debit or credit bulk supply bill(s) so raised along with the monthly bulk supply bill dues.

(o) **"Distribution System"** means the system of wires and associated facilities between the delivery points on the transmission lines or the generating station connection and the point of connection to the installation of the consumers, which is owned and operated by TPSODL;

(p) **"Due Date"** means thirty (30) days from the date of presentation of Monthly Bill of Supply.

(q) **"Eastern Grid"** means the integrated transmission system in the Eastern Region comprising the States of Odisha, Bihar, Jharkand, West Bengal, Chhattisgarh and Sikkim.

(r) **"Effective Date"** shall mean the date on which the SOUTHCO Utility would be vested in TPSODL pursuant to the vesting order of the Commission;

(s) **"Force Majeure"** has the meaning given to it in Clause 9,

(t) **"Grid"** means the integrated transmission system in the country;

TP SOUTHERN ODISHA DISTRIBUTION LIMITED

GRIDCO Limited Bhubaneswar-22

(u) **"Grid Code"** means the code specified by the Commission under clause (h) of sub-section (1) of section 86 of the Electricity Act 2003;

(v) **"Letter of Credit"** shall have the meaning as ascribed to it in Clause 6.1,

(w) **"Monthly Bill of Supply"** means any bill of supply prepared and delivered by GRIDCO to TPSODL pursuant to Clause 5.1;

(x) **"Monthly Notice"** shall have the meaning as ascribed to it in Clause 3.1(d);

(y) **"Operating Procedures"** means the operating procedures agreed from time to time in accordance with the provisions of Clause 8;

(z) **"OPTCL"** means Odisha Power Transmission Corporation Limited;

(aa) **"Party"** means the party to this Agreement,

(bb) **"Performance Guarantee"** means the Bank Guarantee (PBG) No. 0665720BG0000150 for an amount of INR 50 Crores from SBI Commercial Branch, Bhubaneshwar with expiry date of 15-12-2023 and claim date of 15-12-2024 and Bank Guarantee (PBG) No. 2001261BGP00912 for an amount of INR 50 Crores from IDBI Bank, Bhubaneswar with expiry date of 15-12-2023 and claim date of 15-12-2024 Submission date – 16th Dec 2020 or any replacement/renewal thereof, provided by The Tata Power Company Limited on behalf of TPSODL to the Commission pursuant to terms of the Request for Proposal dated 28.11.2019;

(cc) **"Power Supply Requirements"** means, in respect to any period, the projected demand of Consumers for electrical energy within the Area of Supply during such period;

(dd) **"Provisional Annual Notice"** shall have the meaning as ascribed to it in Clause 3.1(a);

(ee) **"Regulations"** means any directions, regulations, orders and/or instructions of the Commission from time to time and any rule, regulation or code from time to time governing and/or regulating the functions of any supply licensee or transmission licensee under Electricity Act, 2003,

(ff) **"Retail Supply"** means supply of electricity to Consumers;

(gg) **"Retail Supply Business"** means the business of sale of electricity by the TPSODL to the category of consumers within its Area of Supply in accordance with the terms of Retail Supply License for distribution of electricity;

(hh) **"Retail Supply Licence"** means the distribution and retail supply licence granted to TPSODL by the Commission,

(ii) **"Retail Supply Licensee"** means any person holding a licence for the distribution and retail supply of electricity granted by the Commission;

(jj) **"Retail Supply Tariff"** means the tariff in respect of the Retail Supply by TPSODL, approved or determined by the Commission and in effect from time to time in accordance with the Section 62 of the Electricity Act and the Retail Supply Licence.

(kk) **"SLDC"** means Odisha State Load Despatch Centre established under Section 31 of the Act, and its successors and assigns,

(ll) **"Supply Shortage"** means any circumstance whatsoever by reason of which GRIDCO's supplies of available electrical energy are at any time insufficient to enable GRIDCO to meet TPSODL's actual demand at such time for Bulk Electricity and/or the actual demand at such time for electricity of any other Retail Supply Licensee;

TP SOUTHERN ODISHA DISTRIBUTION LIMITED

GRIDCO Limited Bhubaneswar-22

(mm) **"SOUTHCO Utility"** shall mean utility covering the distribution circles of City, Berhampur, Aska, Bhanjanagar, Jeypore and Rayagada in the State of Odisha and shall have the same meaning as referred in "Suo moto proceeding under Section 19(3) of the Electricity Act, 2003 for Revocation of License of R-Infra Managed DISCOMs (NESCO, WESCO & SOUTHCO)" dated 4th Mar 2015;

(nn) **"Transmission System"** means the system consisting mainly of extra high voltage electric lines and associate equipment and substations having design voltage higher than 33 kV including any other system of lower voltage as the Commission may specifically recognize, owned or controlled by transmission licensee and used for the purposes of the transportation of electricity between the switchyards of two generating stations or from the switchyard of a generating station to a substation or between substations or to or from any external interconnection and includes all bays / equipment upto the interconnection with the distribution system and any plant, apparatus and meters owned or used in connection with the transmission of electricity but shall not include any part of a distribution system; and

(oo) **"Year"** means any twelve (12) month period during the term of this Agreement which begins on 1st April in one calendar year and ends on 31st March in the following calendar year, provided that the period between Effective Date and the immediately succeeding 31st March as well as 1st April (whichever occurring during the term of this Agreement) and the date on which this Agreement is terminated pursuant to Clause 10, shall be a year for the purposes of this Agreement.

1.2. Interpretation

(a) In this Agreement, the term 'Agreement', where the context so allows, shall include a reference to the Operating Procedures.

(b) References to Clauses and Schedules shall be to clauses of and schedules to this Agreement.

(c) References to persons shall include companies, bodies corporate, unincorporated associations and partnerships.

(d) All references in this Agreement to statutory provisions shall be construed as meaning and including references to:

(i) any statutory modification, amendment, consolidation or re-enactment made after the date of this Agreement and for the time being in force;

(ii) all statutory instruments or orders made pursuant to a statutory provision;

(iii) any rules, regulations, notifications etc. issued from time to time thereunder; and

(iv) any statutory provisions of which such statutory provisions are a modification, amendment, consolidation or re-enactment.

(e) Except where the context otherwise requires, words denoting the singular shall include the plural, and words denoting any gender shall include all genders.

(f) Headings, sub-headings, titles, sub-titles to Sections, Paragraphs and sub-Paragraphs are for information only and shall not form part of the operative provisions of this Agreement or the annexures hereto and shall be ignored in construing the same

(g) References to Sections, Paragraphs or sub-Paragraphs are unless the context otherwise requires, references to Sections, Paragraphs and sub- Paragraphs to this Agreement.

SOUTHERN ODISHA DISTRIBUTION LIMITED

GRIDCO Limited Bhubaneswar-22

(h) References to days, months and years are to calendar days, calendar months and calendar years, respectively

(i) The words "including", "include", "includes", "in particular" or "others" shall be construed without limitation, and shall not limit the generality of any preceding words.

(j) If any provision is found to be void, voidable, invalid or unenforceable, but would be valid and enforceable if some part of it were deleted or the period or area of application reduced, the then such provision shall apply with such modifications as may be necessary to make it valid.

(k) Without prejudice to the foregoing, each of the provisions as set out in this Agreement is separate and distinct, and if any provision of this Agreement is held to be void, voidable, invalid or unenforceable, it shall not invalidate or affect the validity and enforceability of the remaining provisions of this Agreement.

(l) In this Agreement (including the Recitals hereto) the terms set out in Clause1 shall, unless the context otherwise requires, have the meanings set out thereunder.

2. Term

2.1. This Agreement shall be deemed to have commenced on 01.01.2021 and shall continue until it is terminated as provided in Clause 10. In case of any difference or disagreement between the Parties in regard to any changes required from time to time to the terms of this Agreement, the same shall be resolved in accordance with Clause 12.

2.2. The terms of this Agreement shall stand modified or terminated automatically as per the Regulations which the Commission may issue from time to time in accordance with the functions and powers of the Commission under the Act. As soon as practicable following the Regulation of the Commission which has the effect of modifying the terms of this Agreement, GRIDCO and TPSODL shall prepare a revised version of this Agreement, incorporating the modified terms. Following agreement between the Parties that the revised version accurately reflects the relevant Regulation, the Parties shall execute the revised version. Irrespective of modification of terms of this Agreement, the modified terms shall come into force from the effective date of respective Regulations.

3. Power supply Planning

3.1. TPSODL shall notify GRIDCO of its Power Supply Requirements as follows.

(a) The TPSODL shall deliver to GRIDCO, not later than five (5) months prior to the commencement of each Year, a notice ("Provisional Annual Notice") detailing its provisional Power Supply Requirements for each month in such Year.

(b) The TPSODL may provide a revised Annual Notice("**Annual Notice**") detailing its revised Power Supply Requirements for each month in such a Year not later than three (3) months prior to the commencement of each Year.

(c) In respect of the first Year, the Annual Notice shall be provided within thirty (30) days of the date of execution of this Agreement.

(d) In addition to the Annual Notice, not later than fifteen (15) days prior to the commencement of each month, TPSODL shall deliver to GRIDCO a notice ("Monthly Notice") detailing its Power Supply Requirements for that month.

(e) In addition to the Annual Notices and the Monthly Notices, TPSODL shall, upon written request by GRIDCO, provide to GRIDCO such further information in connection with its Power Supply Requirements and in such form and in respect of such periods as GRIDCO shall reasonably require, in order to enable GRIDCO either to comply with its obligations under the Bulk Supply Licence and/or any Regulations or for planning purposes.

TP SOUTHERN ODISHA DISTRIBUTION LIMITED

GRIDCO Limited Bhubaneswar-22

(f) In addition to above, TPSODL shall furnish the day ahead schedule to SLDC with a copy to GRIDCO as per the applicable Regulations.

3.2. TPSODL shall ensure that the information in connection with its Power Supply Requirements provided to GRIDCO in accordance with Clause 3.1 shall represent its best estimate of its Power Supply Requirements for the relevant period, as at the date of delivery of such information.

3.3. Within thirty (30) days of receipt of Annual Notice and seven (7) days of receipt of Monthly Notice as per Clause 3 of this Agreement, GRIDCO shall intimate the TPSODL of its ability to fully or partially meet the TPSODL's Power Supply Requirements.

3.4. If TPSODL becomes aware of any material inaccuracy in any information contained in any Annual Notice or in any Monthly Notice or in any further information provided to GRIDCO pursuant to Clause 3.1, TPSODL shall, as soon as practicable after becoming so aware, deliver to GRIDCO a Notice setting out the relevant corrections or revisions to the information previously provided and shall also provide an explanation for same.

3.5 GRIDCO shall promptly notify the TPSODL as and when it becomes aware of any material inaccuracy in any information contained in any Annual Notice or in any Monthly Notice or in any further information provided by TPSODL under Clause 3 of this Agreement.

4. Conditions of sale and supply of electrical energy by GRIDCO

4.1. The Parties acknowledge and accept that:-

(a) GRIDCO acts in an intermediary capacity as a bulk purchaser of electrical energy from generating companies and other sources and, in turn, effects the supply of Bulk Electricity procured from such sources to TPSODL, other Retail Supply Licensees and other parties in accordance with the Bulk Supply Licence, and/or directions of the Commission from time to time and other Regulations.

(b) GRIDCO's ability to supply Bulk Electricity to TPSODL is, in the absence of defaults or failures solely attributable to GRIDCO, dependent upon, and inter-related to GRIDCO securing sufficient electrical energy from generating companies and other relevant sources and in essence both are back to back arrangements with all the consequences of one flowing to the other.

(c) TPSODL, in turn, acts in an intermediary capacity and purchases electrical energy from GRIDCO at the Bulk Supply Price in order to enable it to effect Retail Supply

(d) In order to fulfil its obligation as the bulk supplier in the State, GRIDCO has signed PPAs to meet the existing as well as future demand of power for the Retail Supply Licensees. As of 01.01.2021, the list of PPAs tied up by GRIDCO along with details such as quantum, supply start date and supply end date are as provided in Annexure-A.

(e) If in the opinion of GRIDCO, at any time during the term of license of the TPSODL, the PPAs provided in Annexure A may be insufficient to meet the power purchase requirement of the Retail Supply Licensees, then GRIDCO may sign additional PPAs with prior consultation with the TPSODL, other Retail Supply Licensees and prior approval of the Commission. Such consultation with the TPSODL shall also be required in case GRIDCO signs any PPAs to procure power from renewable energy sources to fulfil its Renewable Purchase Obligation targets set under the Regulations and orders of the Commission

(f) Till the time GRIDCO expresses its ability to meet the power purchase requirement of the TPSODL from the PPAs provided in Annexure A and any additional PPAs signed as per Clause 4.1(e) above, the TPSODL shall be obligated to meet the full extent of its power purchase requirement from such PPAs.

TP SOUTHERN ODISHA DISTRIBUTION LIMITED

GRIDCO Limited Bhubaneswar-22

(g) At any time, if GRIDCO conveys its inability to meet the power purchase requirement of TPSODL, then the TPSODL may procure power from alternate sources, provided that such alternate source is selected through a transparent and competitive process and with prior approval of the Commission.

(h) In case of expiry of the license period of TPSODL or revocation of the distribution license whichever is earlier, the power purchase agreement or similar arrangements entered into by the TPSODL pursuant to Clause 4.1(g) above shall devolve onto the successor entity, subject to approval of the Commission in accordance with relevant laws prevailing at that time.

4.2. In acknowledging the circumstances in Clause 4.1the parties agree to the following:

(a) At any time a Supply Shortage occurs, GRIDCO shall endeavour, to the extent practicable and economic, to allocate its available supplies of electrical energy, (subject from time to time to any limitations and/or constraints of the Transmission System and to the rules of the Grid, the requirements of the Grid Code, restrictions imposed by SLDC and prudent utility practices) in an appropriate and non-discriminatory manner amongst TPSODL, the other Retail Supply Licensees and other long term purchasers and except, where the Commission finds a breach solely or primarily attributable to GRIDCO, GRIDCO shall not be liable to compensate TPSODL for any such Supply Shortage for any reason whatsoever.

(b) Provided however, GRIDCO agrees to equitably share through subsequent approved ARR of GRIDCO with TPSODL, the other Retail Supply Licensees and other purchasers any compensation GRIDCO receives from the generating companies, other suppliers or any other person for such Supply Shortage.

5. Calculation and payment of charges

5.1. After the end of each month, GRIDCO shall prepare and deliver to TPSODL a bill of supply (**"Monthly Bill of Supply"**) in accordance with the Bulk Supply Price specifying all the amounts payable by TPSODL to GRIDCO under the terms of this Agreement or otherwise as per the directions of the Commission. GRIDCO shall give requisite details of the calculation of charges in respect of the relevant month in each Monthly Bill of Supply. GRIDCO shall also claim/adjust the debit or credit bill of supply, if any for the preceding month(s) along with the Monthly Bill of Supply. GRIDCO shall also claim/adjust the debit or credit bill of supply, if any for the preceding month(s) along with the Monthly Bill of Supply.

5.2. The amount of each Monthly Bill of Supply shall become payable by TPSODL on the date falling thirty(30) days after the receipt of such Monthly Bill of Supply (**"Due Date"**), whereupon TPSODL shall pay the full amount of such Monthly Bill of Supply to GRIDCO without deduction, set-off or withholding on any account whatsoever, other than on following accounts specified in Clause below, unless other-wise agreed between GRIDCO and TPSODL or required under prevailing law or any order of the Commission.

5.3. Deduction, set-off or withholding of payment would be permitted only under the following conditions:

(a) Rebate for prompt payment

(b) To the extent of any amount owed by GRIDCO to Operating Company, as allowed by the Commission or acknowledged as payable by GRIDCO

5.4. Disputed Bill

(a) If a Party does not dispute a Monthly Bill of Supply raised by the other Party by the Due Date, such Monthly Bill of Supply shall be taken as conclusive.

TP SOUTHERN ODISHA DISTRIBUTION LIMITED

GRIDCO Limited Bhubaneswar-22

(b) If a Party disputes the amount under a Monthly Bill of Supply, that Party shall, within fifteen (15) days of receiving such Monthly Bill of Supply, issue a notice ("**Bill Dispute Notice**") to the invoicing Party setting out:

(i) the details of the disputed amount (This clause shall not be applicable in case of error not attributable to GRIDCO);

(ii) its estimate of what the correct amount should be; and

(iii) all written material in support of its claim.

(c) If the invoicing Party agrees to the claim raised in the Bill Dispute Notice issued pursuant to Clause 5.4(b), the invoicing Party shall revise such Monthly Bill of Supply within seven (7) days of receiving the Bill Dispute Notice. The disputing Party shall thereafter within seven (7) days of receiving the revised Monthly Bill of Supply from the invoicing Party or the Due Date whichever is later, make the payment thereunder, and if the disputing Party has already made the excess payment, the invoicing Party shall refund to the disputing Party such excess amount within fifteen (15) days of receiving the Bill Dispute Notice. In such a case excess amount shall be refunded along with interest at the same rate as delayed payment surcharge determined as per Clause 5.6, which shall be applied from the date on which such excess payment was made by the disputing Party to the Invoicing Party and up to and including the date on which such payment has been received as refund.

(d) If the invoicing Party does not agree to the claim raised in the Bill Dispute Notice issued pursuant to Clause 5.4(b), it shall, within ten (10) days of receiving the Bill Dispute Notice, furnish a notice ("Bill Disagreement Notice") to the disputing Party providing:

(i) reasons for its disagreement;

(ii) its estimate of what the correct amount should be, and

(iii) all written material in support of its counter-claim.

(e) Upon receipt of the Bill Disagreement Notice by the disputing Party under Clause 5.4(d), authorized representative(s) or a director of the board of directors/ member of board of the disputing Party and the invoicing Party shall meet and make best endeavours to amicably resolve such dispute within fifteen (15) days of receipt of the Bill Disagreement Notice.

(f) If the Parties do not amicably resolve the dispute within fifteen (15) days of receipt of Bill Disagreement Notice pursuant to Clause 5.4(d), then the aggrieved Party may approach the Commission for dispute resolution in accordance with Clause 12. The Parties shall be bound by the decision of the Commission, including in regard to delayed payment surcharge, if any directed to be paid by the Commission.

(g) If a dispute regarding a Monthly Bill of Supply is settled pursuant to Clause 5.4(e) or by the dispute resolution mechanism provided in this Agreement in favour of the Party that issues a Bill Dispute Notice, the other Party shall refund the amount, if any incorrectly charged and collected from the disputing Party or pay as required, within five (5) days of the dispute either being amicably resolved by the Parties pursuant to Clause 5.4(e) or settled by dispute resolution mechanism along with interest at the same rate as delayed payment surcharge determined as per Clause 5.6 from the date on which such payment had been made to the invoicing Party or the date on which such payment was originally due, as may be applicable.

(h) For the avoidance of doubt, it is clarified that despite a dispute regarding a Monthly Bill of Supply, the TPSODL shall, without prejudice to its right to dispute, be under an obligation to make payment, of the same within the Due Date.

(i) This clause shall not be applicable in case of error not attributable to GRIDCO.

TP SOUTHERN ODISHA DISTRIBUTION LIMITED

GRIDCO Limited Bhubaneswar-22

5.5. If payment either through Letter of Credit or by cash or by RTGS/NEFT is made by the TPSODL to GRIDCO within Due Date, the TPSODL shall be allowed rebate as per the prevalent Regulations of the Commission or as per any mechanism put in place by GRIDCO pursuant to Regulations of the Commission on the matter.

5.6. If payment is not received by GRIDCO on or before the Due Date, TPSODL shall pay to GRIDCO a delayed payment surcharge determined as per the prevalent Regulations of the Commission or as per any mechanism put in place by GRIDCO pursuant to Regulations of the Commission on this matter.

5.7. Further, if there is undisputed outstanding bulk supply bill dues, the payment so made by the TPSODL shall be first adjusted by GRIDCO against the delayed payment surcharge, then towards the arrear dues and balance towards the current dues.

6. **Payment security mechanism.**

6.1. The TPSODL shall provide to GRIDCO, not later than thirty (30) days of the date of signing of this Agreement, an unconditional, revolving and irrevocable letter of credit (**"Letter of Credit"**) from a Scheduled Commercial Bank in India having operations in Bhubaneswar (**"Bank"**)for an amount equivalent to two (2) months of average Monthly Bill of Supply amount for the relevant year for which the Letter of Credit is issued in accordance with the provisions of this Agreement. The Letter of Credit shall be invocable at any branch in Bhubaneswar city.

6.2. The Letter of Credit shall be a stand by one and in the event of TPSODL's failure to pay the Monthly Bill of Supply by the Due Date, GRIDCO may, in its discretion, invoke the Letter of Credit for recovery of the amount due as per Clause 6.1 above, whereupon the Bank issuing the Letter of Credit shall, without any reference to the TPSODL, pay the amount to GRIDCO upon submission of following documents namely:

(a) a copy of the Monthly Bill of Supply which has remained unpaid; and

(b) a certificate from GRIDCO to the effect that the Monthly Bill of Supply is in accordance with this Agreement and has remained unpaid.

6.3. The first Letter of Credit shall be valid up to 31st March of the Next year following the date of its issue and thereafter shall be renewed on an annual basis valid and operative for the following Year. At the time of every renewal, the amount of Letter of Credit shall be modified to reflect the revision in Monthly Bill of Supply amount for that relevant year of supply of power. Advice of the renewal shall be duly secured from the Bank by TPSODL and furnished to GRIDCO, at least two (2) months prior to the commencement of the relevant year.

6.4 The TPSODL shall ensure the existence of Letter of Credit at all times during the terms of this Agreement.

6.5. In the event that the amount covered by the Letter of Credit is at any time insufficient for recovery of payment due against the Monthly Bill of Supply, the TPSODL shall, within a period of seven (7) days from the date on which such shortfall occurred, cause the Letter of Credit to be replenished and reinstated to the extent specified in Clause 6.1.

6.6. There shall be no restriction on the number of times a Letter of Credit may be utilised under the terms of the relevant Letter of credit, provided that GRIDCO shall not be entitled to utilise the Letter of Credit for amount in excess of the sum payable (together with any delayed payment surcharge) or if it shall already have received payment of the outstanding sum.

6.7. In case GRIDCO is not able to recover its dues through the Letter of Credit mechanism, GRIDCO shall approach the Commission with a request to encash the Performance Guarantee, furnished by The Tata Power Company Limited, to the extent of shortfall in recovering the dues payable by TPSODL to GRIDCO. Encashment of the Performance Guarantee shall be at the sole discretion of the Commission.

The Southern Odisha Distribution Limited

GRIDCO Limited Bhubaneswar-22

7. Collection in first (1st) month of operations.

7.1. TPSODL is liable to collect the revenue billed amount from current live consumers in its first (1st) month of operations from the Effective Date.

7.2. From this collected amount, TPSODL is required to pay directly to GRIDCO the Bulk Supply Price of the last month prior to the Effective Date, on account of the power procured from GRIDCO by SOUTHCO Utility.

7.3. Any excess collection made by TPSODL over and above the Bulk Supply Price of the last month prior to the Effective Date, on account of the power procured from GRIDCO by SOUTHCO Utility, shall be dealt with in accordance with orders of the Commission.

8. Operating arrangements, connection and metering.

8.1. The Parties acknowledge and accept that they are bound by the Regulations including the Grid Code. The Parties shall conduct their respective Businesses in accordance with the terms of the same.

8.2 Subject to Clause 8.1, the Parties shall co-ordinate with each other on a regular basis in order to resolve all operational issues, including connection, metering, load shedding and other day to day matters and for the said purpose shall form such coordination committees consisting of such officers as the Parties may mutually agree.

8.3. The Co-ordination committees established by the Parties pursuant to Clause 8.2 shall agree a set of Operating Procedures, which will regulate relations between the Parties in respect of connection of the Distribution System to the Transmission System, the repair and maintenance of points of Connection, billing, metering and the making available of data and evidence relating to metering. The Operating Procedures agreed by the co-ordination committees may be amended from time to time by agreement between the Parties. The Operating Procedures shall be in accordance with the Regulations, directions, orders and codes referred to in Clause 8.1.

8.4 In the event that there is, any dispute relating to the agreement or implementation of the Operating Procedures the matter will be resolved in accordance with Clause 12.

9. Force Majeure

9.1. "Force Majeure" means any event or circumstance or combination of events or circumstances which is beyond the control of a Party and results in or causes the failure of that Party ("non-performing Party") to perform any of its obligations under this Agreement, and includes:-

(a) Act of God including lightning, drought, fire and explosion, earthquake, volcanic eruption, landslide, flood, cyclone, typhoon, tornado, geological surprises, or exceptionally adverse weather conditions which are in excess of the statistical measures for the last hundred (100) years; or

(b) Any act of war, invasion, armed conflict or act of foreign enemy, blockade, embargo, revolution, riot, insurrection, terrorist or military action; or

(c) Industry wide strikes and labour disturbances having a nationwide impact in India; or

(d) Any law, order, proclamation, regulation, ordinance, demand or requirements having legal effect of any government; or

(e) Any other event beyond the reasonable control of the Party affected.

9.2. Where a non-performing Party is unable to perform its obligations under this Agreement by reason of Force Majeure, the non-performing Party should notify the other Party as soon as practicable of the occurrence of Force Majeure event, identifying the nature of the event

SOUTHERN ODISHA DISTRIBUTION LIMITED

GRIDCO Limited Bhubaneswar-22

or circumstance of Force Majeure event, the expected duration of such Force Majeure event, the particular obligations of the non-performing Party which are affected by such Force Majeure event and the period for which such obligations are expected to be so affected.

9.3. Subject to Clause 9.2, the obligations of the Parties under this Agreement shall be suspended only, to the extent that:

(a) Such suspension is of no greater scope and no longer duration than is required by the effects of the relevant event or circumstance of Force Majeure; and

(b) The non-performing Party uses all reasonable efforts to remedy, as soon as practicable, its inability to perform the affected obligations.

9.4. Notwithstanding the occurrence of an event of Force Majeure, GRIDCO and TPSODL shall remain bound by the provisions of this Agreement, including (without limitation) the provisions of Clause 4.

9.5. In case of any costs accruing to a Party due to Force Majeure event, the matter shall first be referred to the chief executives (by any name called) of GRIDCO and TPSODL for amicable resolution. In case of any dispute, the matter shall be referred to the Commission for resolution in accordance with the powers conferred on the Commission by Section 86 of the Act.

10. Termination

10.1. This Agreement shall terminate automatically and without any requirement as to notice upon the earliest to occur of:

(a) Revocation by the Commission or other cancellation of the Bulk Supply Licensee;

(b) Revocation by the Commission or other cancellation of the Retail Supply Licensee;

(c) Expiry of the Bulk Supply Licensee without renewal; and

(d) Expiry of the Retail Supply Licensee without renewal;

10.2. If at any time TPSODL fails to pay the full undisputed amount of any Monthly Bill of Supply on the date on which the same shall have become payable in accordance with Clause 5 then:

(a) TPSODL shall pay to GRIDCO a delayed payment surcharge in respect of the period from the Due Date for payment until the date of actual payment,

(b) If the failure subsists for a period of sixty (60) days or more GRIDCO shall be entitled to apply to the Commission for termination of this Agreement forthwith.

The rights of GRIDCO under this Clause 10.2 shall be cumulative and exclusive of each other and also without prejudice to the obligation of TPSODL under other provision of this Agreement.

10.3. Upon the termination of this Agreement:

(a) GRIDCO shall prepare and deliver to TPSODL a final bill of supply setting out all amounts which are then outstanding from TPSODL to GRIDCO whether pursuant to Clause 5 or otherwise, together with any costs incurred by GRIDCO in connection with the termination of this Agreement; and

(b) TPSODL shall pay to GRIDCO immediately upon service of such final bill of supply, without deduction, set-off or withholding on any account whatsoever, the full amount of such final bill of supply

TP SOUTHERN ODISHA DISTRIBUTION LIMITED

GRIDCO Limited Bhubaneswar-22

10.4. Clause 10.3 and the Dispute Resolution Procedure contained in Clause 12 and the Operating Procedures shall survive termination of this Agreement.

11. Waiver of Rights

11.1. No waiver of any breach of any term of this Agreement shall (unless expressly agreed in writing by the waiving party) be construed as a waiver of a future breach of the same term or as authorising a continuation of the particular breach.

11.2. No forbearance or failure by any Party to exercise or assert or claim any right or entitlement hereunder shall be construed (in the absence of a written agreement to waive or a written confirmation of a past waiver) as a waiver of that right or entitlement

12. Dispute Resolution

12.1. Any dispute arising under or in connection with this Agreement unless otherwise provided for in the Operating Procedures shall first be referred to the chief executives (by any name called) of GRIDCO and TPSCDL for amicable resolution within thirty (30) days, failing which the matter shall be referred to the Commission for resolution in accordance with the powers conferred on the Commission by Section 86 of the Act.

13. Severability

13.1. If any provision of this Agreement is or becomes invalid or unenforceable by the courts of any jurisdiction to which it is subject, such invalidity or unenforceability shall not prejudice the remaining provisions of this Agreement, which shall continue in full force and effect

14. Variations

14.1. Variations to this Agreement shall be in writing and signed by both Parties with prior approval of the Commission.

15. Assignment and Sub-contracting

15.1. Neither Party may assign or transfer any of its rights or obligations under this Agreement to any person without the written consent of the other and to the Commission, such consent not to be unreasonably withheld or delayed.

15.2. Subject to the requirements of law or any license or any Regulation, either Party shall have the right, upon giving thirty (30) days' written notice to the other, to sub-contract or delegate the performance of any of its obligations under this Agreement, provided that such subcontracting or delegation shall not relieve the relevant Party from responsibility to the other Party for the performance of any such obligations under this Agreement or liability to the other Party for non-performance.

16. Notices

16.1. Any notice or other communication given or made under or in connection with the matters contemplated by this Agreement shall be in writing and in the English language

16.2. Any such notice or other communication shall be addressed as provided in Clause 16 and, if so addressed, shall be deemed to have been duly given or made as follows:

(a) if sent by personal delivery, upon delivery at the address of the relevant Party; and

(b) if sent by facsimile, on the date of transmission

(c) on receipt if sent by email

Provided that if, in accordance with the above provisions, any such notice or other communication is given or made outside working hours, then such notice or other

TP SOUTHERN ODISHA DISTRIBUTION LIMITED

GRIDCO Limited Bhubaneswar-22

communication shall be deemed to be given or made at the start of working hours on the next business day.

16.3. The relevant addressee, address, facsimile number, and address for electronic mail of each Party for the purposes of this Agreement, subject to Clause 16.4 are:

Name of the Party	Address	Facsimile No. / Email ID
GRIDCO LIMITED	Director (T&BD) GRIDCO AW Building, Janpath, Bhubaneswar-751022	dir.trading@gridco.co.in
TP Southern Odisha Distribution Limited	Chief Executive Officer (CEO) Kamapalli, Courtpeta Berhampur Ganjam, Odisha - 760004	ceo.office@tpsouthernodisha.com asingh@tpsouthernodisha.com

16.4. A Party may notify the other Parties of a change to its name, relevant addressee, address or facsimile number or address for electronic mail for the purposes of Clause 16.3 provided that such notification shall only be effective on:

(a) the date specified in the notification as the date on which the change is to take place; or

(b) if no date is specified or the date specified is less than five (5) business days after the date on which notice is given, the date falling five (5) business days after notice of any such change has been given.

17. Governing Law

17.1. This Agreement shall be governed by Indian law in every aspects including formation and interpretation and even if executed by either Party outside India, shall be deemed to have been made in India. The formation, construction, performance and enforcement of this Agreement shall be strictly in accordance with Indian laws.

TP SOUTHERN ODISHA DISTRIBUTION LIMITED

GRIDCO Limited Bhubaneswar-22

IN WITNESS WHEREOF THE PARTIES HAVE CAUSED THIS AGREEMENT TO BE EXECUTED BY THEIR RESPECTIVE DULY AUTHORISED OFFICERS AS OF THE DATE SET FORTH ABOVE.

SIGNED ON BEHALF OF GRIDCO LIMITED

By. G.B. Swain Div (F&A)

On 02/02/2021

GRIDCO Limited Bhubaneswar-22

SIGNED ON BEHALF OF TP SOUTHERN ODISHA DISTRIBUTION LIMITED

By. Arvind Singh

On 02/02/2021

TP SOUTHERN ODISHA DISTRIBUTION LIMITED

In presence of witness

01. Samir Kumar Mohanty
(SAMIR KUMAR MOHANTY, Sr. GM(Ele), GRIDCO)

02. Darshan Soni
Company Secretary
TPCODL

Annexure : LIST OF PPA - EXISTING AND UPCOMING POWER PROJECTS HAVING ODISHA SHARE

EXISTING AND UPCOMING POWER PROJECTS HAVING ODISHA SHARE						
Nature of Plant	S. No.	Name of the Plant	Installed capacity as per PPA (MW)	Status of PPA	Scheduled date of Commissioning	Date/Status of PPA
		IPP				
Coal Based Thermal Power Plant	1	M/s. Vedanta Ltd., Jharsuguda	2400 (4x600)	LTOA CTA Connectivity Already Granted	1. 02-03-2011 2. 10-01-2012 3. 21-05-2011 4. 26-03-2012	Signed PPA 19-12-2007 Term of PPA 25 years & can be extended mutually Revised PPA is to be signed
	2	M/s. GMR Kamalanga Energy Ltd., Kamalanga, Dhenkanal	1050 (4x350)	PPA is for entire power generated by the IPP. Balance sale to merchant	1 & 2: Already commissioned 3 & 4: Deferred	Signed PPA 28-09-2006 Revised PPA 03-01-2011 Term of PPA 25 years & can be extended mutually
	3	M/s. Jindal India Thermal Power Ltd., Jindal Nagar, Angul	1320 (4x330)	PPA is for 1 Coal Block allocated within the State. Balance 2 CTA shall supply 1.5 GW to Odisha	1 & 2: Already commissioned 3 & 4: Deferred	Signed PPA 28-09-2006 Revised PPA 03-01-2011 Term of PPA 25 years & can be extended mutually
	4	M/s. Ind-Barath Energy (Utkal) Ltd., Jharsuguda & Sahaspur Coal Block, Angul	1050 (2x525)	PPA is for 1 Coal Block allocated within the State. Balance 2 CTA shall supply 1.5 GW to Odisha	1 & 2: 30-03-2015 3 & 4: Deferred. Project is delayed due to NOC issue in Coal Block progress	Signed PPA 28-09-2006 Revised PPA 03-01-2011 Term of PPA 25 years & can be extended mutually
	5	M/s. Lanco Babandh Power Ltd., Dhenkanal & Sharda Block, Dhenkanal	660 (2x660)	PPA is for 1 Coal Block allocated within the State & 2 CTA shall supply power	1 & 2: Commissioning delayed due to land issue 3 & 4: Commissioning delayed due to land issue progress	Signed PPA 28-09-2006 Revised PPA 03-01-2011 Term of PPA 25 years & can be extended mutually
	6	M/s. Sterlite Power Company Ltd., Sri Aurobindo Nagar, Sahaspur, Dhenkanal	1050 (2x525)	2 CTA shall supply power. PPA is for entire power	1 & 2: Substantial progress made. Commissioning delayed due to land issue progress. Gas to NTPC	Signed PPA 28-09-2006 (MoU signed for 1050 MW power is available only) Revised PPA is to be signed Term of PPA 25 years
	7	M/s. Jas Infra Thermal Power Company Ltd., Phulnakhara, Angul	525 (2x525)	1 Coal Block allocated within the State. Balance NTPC shall supply	Construction of power plant is delayed. Date of COD is not known since 2012	PPA 31-12-2012 Term of PPA 25 years & can be extended mutually

Signed 29/12/12

TP SOUTHERN ODISHA DISTRIBUTION LIMITED

GRIDCO Limited Bhubaneswar-22

ANNEXURE - A

EXISTING AND UPCOMING POWER PROJECTS HAVING ODISHA SHARE						
Nature of Plant	Sl. No.	Name of the Plant	Installed capacity as per PPA (MW)	Tariff	Commissionable date of Completion	Date & Term of PPA
Coal Based Thermal Power Plant (TPP)	1	M/s. IEPL Nilgiri Power Pvt. Ltd., Hyderabad, Angul, Cuttack	600 (2x300)	25% on full cost plus power generated beyond 80% PLF at variable cost	Only NTPC Ltd. under liquidation	PPA: 28-06-2006 Term of PPA: 25 years & can be extended mutually
	2	M/s. NTPC Nilachal Power & Infrastructure Pvt. Ltd., Hyderabad (Formerly M/s. Maharashtra Alloys Power Company Ltd.), Chhatrapur, Talcher, Angul	1320 (2x660)	4% of net saleable energy allocated within the State Otherwise, NTPC's pooled 12% of saleable coal	Construction activities yet to begin. Power NOC issued on 31-08-2010. Project activities will be initiated in the month of April 2020	Original PPA: 29-06-2006 Amended PPA: 16-06-2009 Revised PPA: 12-06-2011 Term of PPA: 25 years & can be extended mutually
	3	M/s. IDAL Power Company Ltd., Mandoli, Angul, Odisha	650	25% on full cost plus power generated beyond 80% PLF at variable cost	Proposal for solid waste based project	Date of PPA: 28-09-2006 Term of PPA: 25 years & can be extended mutually
	4	M/s. Balaji Thermal Power Pvt. Ltd., Hyderabad, formerly M/s. Nava Bharat Power Pvt. Ltd.), Mandoli, Dhenkanal	2250 (2x525 + 1x700)	25% on full cost plus power generated beyond 85% PLF at variable cost	Construction activities yet to start	Date of PPA: 24-09-2006 Term of PPA: 25 years & can be extended mutually
	5	M/s. Angul Energy Ltd. (Formerly M/s. Bhushan Energy Pvt. Ltd., New Delhi), Angul, Angul	2400	25% on full cost plus power generated beyond 85% PLF at variable cost	Construction activities yet to begin	Date of PPA: 28-09-2006 Term of PPA: 25 years & can be extended mutually
	6	M/s. Vista Power Pvt. Ltd., Kalinga Nagar, Jajpur, Odisha	1320 (2x660)	25% on full cost plus power generated beyond 80% PLF at variable cost, if Coal block allocated within the State otherwise, OPGC also supply 25% at variable cost	Construction activities yet to begin	Original PPA: 23-09-2006 Amended PPA: 11-06-2009 Revised PPA: 04-01-2011 Term of PPA: 25 years & can be extended mutually
	7	M/s. Aarcorp Power Company Ltd., Bhubaneswar, Angul, Odisha	2640 (2x660 + 2x660)	4% net saleable coal if Coal block allocated within the State. Otherwise, ARCL also supply 25% at variable cost	Construction activities yet to begin	Date of PPA: 04-06-2011 Term of PPA: 25 years & can be extended mutually
	8	M/s. Aarti Steels Ltd., Ludhiana, Punjab, Gopalpur, Cuttack	540 (3x180)	25% on full cost plus coal if Coal block allocated within the State. Otherwise ASL shall supply 25% at variable cost.	Project under consideration	Date of PPA: 24-10-2009 Term of PPA: 25 years & can be extended mutually

TP SOUTHERN ODISHA DISTRIBUTION LIMITED

GRIDCO Limited Bhubaneswar-22

EXISTING AND UPCOMING PROJECTS HAVING ODISHA SHARE

Nature of Plant	S. No.	Name of the Plant	Installed capacity as per PPA (MW)	Status of PPA	Status of Coal Linkage/Coal Source	Date of signing of PPA
Coal Based Thermal Power Plant (TPP)	16	[illegible]	[illegible] (2x660)	[illegible]	[illegible]	Date of PPA: 11.01.2012 [illegible]
	17	[illegible]	1320 (2x660)	[illegible]	[illegible]	[illegible]
	18	[illegible]	1320 (2x660)	[illegible]	[illegible]	[illegible]
	19	[illegible]	1320 (2x660)	[illegible]	[illegible]	[illegible]
	20	[illegible]	1320 (2x660)	[illegible]	[illegible]	[illegible]
	21	[illegible]	660 (1x660)	[illegible]	[illegible]	[illegible]
	22	[illegible]	660 (1x330)	[illegible]	[illegible]	[illegible]
	23	[illegible]	1320 (2x660)	[illegible]	[illegible]	[illegible]

TP SOUTHERN ODISHA DISTRIBUTION LIMITED

GRIDCO Limited Bhubaneswar-22

Nature of Plant	SL No.	Name of the Plant	Installed capacity as per PPA (MW)	Status of Project	COD/Proposed commissioning	Date/Status of PPA
Coal Based Thermal Power Plant (IPP)	24	M/s. [illegible] Power Ltd., Bihar Lagnam at [illegible], Angul	1320 (2x660)	14% at variable cost, if Coal Block allocated within State. Otherwise, CTU shall supply 12% at variable cost.	Construction activities yet to begin	PPA not yet executed though MoU signed on 07-02-2009
	25	M/s. Kalinga Energy & Power Limited, Bhubaneswar at Sagarpur, Kalahandi, Jharsuguda	1320	14% at variable cost, if Coal Block allocated within State. Otherwise, KEPL shall supply 12% at variable cost.	Construction activities yet to begin	PPA not yet executed though MoU signed on 07-01-2009
	26	M/s. Essar Power (Orissa) Ltd., Mumbai	1200	22% at full cost plus profit generated beyond 60% PLF at variable cost	MoU has been cancelled	Principal PPA: 28-09-2006 Term of PPA: 25 years & can be extended mutually
	27	M/s. Vedya Power & Power Pvt. Ltd., Bargarh Tarbi, Kharsar, Kalinga, Kalahandi	1320 (4x330)	14% at variable cost, if Coal Block allocated within the state. Otherwise, VPPL shall supply 12% at variable cost	MoU has been cancelled	Date of PPA: 04-07-2011 Term of PPA: 25 years & can be extended mutually
	28	M/s. CESC Ltd., Kolkata at Sarapaka, Orissa	1320 (2x660)	14% at variable cost, if Coal Block allocated within State.	MoU has been cancelled	PPA: 28-09-2006 Amended PPA: 05-09-2009 Revised PPA: 11-12-2010 Term of PPA: 25 years & can be extended mutually
	29	M/s. Jindal India Thermal Power Limited, New Delhi at Sirsa, Dhenkanal	1320 (2x660)	14% at variable cost, if Coal Block allocated within State. Otherwise, JITPL shall supply 12% at variable cost.	MoU has been cancelled	Date of PPA: 05-01-2011 Term of PPA: 25 years & can be extended mutually
	30	M/s. Vedanta Thermal Power Pvt. Limited, Bhubaneswar at Jharsuguda, Sambalpur	1320 (2x660)	14% at variable cost, if Coal Block allocated within State. Otherwise, VTPPL shall supply 12% at variable cost.	MoU has been cancelled	Date of PPA: 15-09-2009 Term of PPA: 25 years & can be extended mutually
	31	M/s. PSK Energy Sources Pvt. Ltd. Mahanadi, N.H. at Bhapur, Nayagarh	1320 (2x660)	14% at variable cost, if Coal Block allocated within State. Otherwise, PSK shall supply 12% at variable cost.	MoU has been cancelled	Date of PPA: 04-01-2011 Term of PPA: 25 years & can be extended mutually
	32	M/s. [illegible] Power Gen Pvt. Ltd. [illegible] at [illegible], Bhubaneswar Tarbha Nagar [illegible] Ltd. Angul	1980 (3x660)	14% at variable cost, if Coal Block allocated within State. Otherwise, [illegible] shall supply 12% at variable cost.	MoU has been cancelled	Date of PPA: 28-01-2011 Term of PPA: 25 years & can be extended mutually

TP SOUTHERN ODISHA DISTRIBUTION LIMITED

GRIDCO Limited Bhubaneswar-22

TRANSMISSION & POWER PROJECTS HAVING LONG TERM PPAs

Nature of Plant	Sl. No.	Name of the Plant	Installed Capacity as per LTPA (MW)	Share Available	LTOA Available date of Commissioning	Date/Term of PPA
		NTPC & PSU Plant				
Coal fired Thermal Power Plant NTPC & PSU	1	Talcher STPS, NTPC, Talcher [illegible]	460 MW (4x60 + 2x110) MW	100%	41.19% 1967 [illegible] [illegible] 4x110 & 1969 [illegible] [illegible]	Date of PPA: [illegible] Term of PPA-25 Years & can be extended mutually
	2	Ib Thermal Power Station (IBTPS), Stage-I, Banharpali, Jharsuguda	420 MW (2x210) MW	100%	01.05.12.1994 [illegible]	Date of PPA: 13.09.1996 Term of PPA: 10 years & can be extended mutually
	3	Ib TPS, Extension Project (IBTPS) at Jharsuguda (Stage-II Units 3 & 4)	1320 (2x660)	29% (up to 31.03.2032) 100% w.e.f. 01.04.2032	[illegible] [illegible]	Date of PPA: [illegible] Supplementary PPA [illegible] Term of PPA-25 years & can be extended mutually
	4	Farakka STPS, Stage-I & II	1500 (3x200 + 2x500)	10.10%	Unit-I 1.11.1986 Unit-II 01.10.1987 Unit-III 01.09.1988 Unit-IV 01.09.1994 Unit-V 01.04.1995	Date of PPA: 25.03.1995 Term of PPA-25 Years & can be extended mutually
	5	Farakka STPS Stage-III	500 (1x500)	12.15%	Unit-[illegible] on [illegible]	Date of PPA: 25.12.2006 Term of PPA-25 Years & can be extended mutually
	6	Kahalgaon STPS, Stage-I	840 (4x210)	15.72%	Unit-I 01.01.1995 Unit-II 01.04.1995 Unit-III 01.02.1996 Unit-IV 01.08.1996	Date of 25.05.1995 Term of PPA-25 Years & can be extended mutually
	7	Kahalgaon STPS Stage-II	1500 (4x500)	26.0%	Unit-I 01.08.08 Unit-II 30.[illegible].09 Unit-III 30.[illegible].10	Date of PPA: 11.05.06 Term of PPA-25 Years & can be extended mutually [illegible]
	8	Talcher STPS Stage-I	1000 (2x500)	32.34%	Unit-I 01.07.97 Unit-II 01.07.97	Date of PPA: 25.05.93 Term of PPA-25 Years & can be extended mutually
	9	Talcher STPS Stage-II	2000 (4x500)	30%	Unit-I 01.08.03 Unit-II [illegible] Unit-III [illegible] Unit-IV 01.08.04	Date of PPA: 20.[illegible] Term of PPA-25 Years & can be extended mutually

SOUTHERN ODISHA DISTRIBUTION LIMITED

GRIDCO Limited Bhubaneswar-22

Nature of Plant	Sl. No.	Name of the Plant	Installed capacity as per PPA (MW)	Share in [illegible]	Expected date of Commissioning	Date/Term of PPA
Coal Based Thermal Power Plant (NTPC & IPSU)	1	[illegible] NTPC, [illegible] Tharpur & Chhattisgarh	1980 (3x660)	[illegible]	#1: Mar-2021 #2: Sept-2021 #3: Mar-2022	Date of PPA: [illegible] Term of PPA: [illegible] years & can be extended mutually
	2	Integrated Thermal Power Station, NTPC at Darlipali, Sundargarh	3200 (4x800)	[illegible]	[illegible] 2020 [illegible] Sep [illegible] [illegible] Construction activities yet to start	Date of PPA: 27-12-2010 Term of PPA: [illegible] years & can be extended mutually
	3	[illegible] NTPC & SAIL at [illegible], Sundargarh	[illegible] ([illegible])	[illegible]	[illegible] unit expected in [illegible] 2020	Date of PPA: [illegible] 2011 Term of PPA: 25 years & can be extended mutually
	4	OPGC [illegible] at IB TPS, Jharsuguda	2x660 (4x660)	[illegible]	[illegible] activities yet to start	Date of PPA: [illegible] Term of PPA: 25 years & can be
	5	[illegible] Project, NTPC at Lecha, Darrah, Angul	1320 (2x660)	50%	Construction activities yet to start	Date of PPA: [illegible] 2007 Term of PPA: 25 years & can be extended mutually
Central Hydro Power Projects	1	Chukha HEP, Bhutan	336 (4x84) (270 MW ER Allocation)	[illegible]	1988	Date of PPA: [illegible] 2002 Term of PPA: [illegible] can be extended mutually
	2	Tala HEP, Bhutan	1020 (6x170)	[illegible]	[illegible]	Date of PPA: 27.10.2006 Term of PPA: [illegible] years & can be extended mutually
	3	Teesta-V PS (NHPC)	510 (3x170)	[illegible]	10.04.2008	Date of PPA: 04.04.2001 ([illegible]) [illegible] (Revised PPA) Term of PPA: 25 years & can be extended mutually
	4	Sunkosh HEP (NHPC) Bhutan	2[illegible] (4x[illegible])	[illegible]	16.08.2019	Date of PPA: [illegible] 2017 Term of PPA: 25 years & can be extended mutually

TP SOUTHERN ODISHA DISTRIBUTION LIMITED

GRIDCO Limited Bhubaneswar-22

EXISTING AND UPCOMING POWER PROJECTS HAVING ODISHA SHARE

Nature of Plant	S. No	Name of the Plant	Installed capacity (as per PPA) (MW)	Share of Odisha	COD/Probable date of completion	Date/Term of PPA
		State Hydro Power Stations				
State Sector Hydro Power Projects	1	Hirakud	275.5 (2x68.5 + 2x37 + 3x37.5) (Unit 5&6 Under RM&U)	16% + 5 MW to [illegible]	1) 11.02.1958 2) 11.11.1957 3) 11.12.1956 4) 15.05.1957 5) 19.01.1962 6) 05.08.1963 7) 13.09.1993	Date of PPA: 20.11.2009 Term of PPA: 25 years & can be extended mutually
	2	Chiplima	48 (3x24) (Unit 3: Under RV&U)	100%	1) 15.07.1962 2) 26.11.1962 3) 01.05.1963	Date of PPA: 20.11.2009 Term of PPA: 25 years & can be extended mutually
	3	Balimela	296 (4x60)	100%	1) 16.04.1973 2) 28.01.1974 3) 04.05.1974 4) 26.03.1975 5) 02.03.1976 6) 26.01.1977 7) 23.12.2008 8) 23.01.2009	Date of PPA: 20.11.2009 Term of PPA: 25 years & can be extended mutually
	4	Rengali	250 (5x50 + 2x25)	100%	1) 27.01.1985 2) 28.01.1986 3) 10.03.1989 4) 19.03.1990 5) 14.03.1992	Date of PPA: 20.11.2009 Term of PPA: 25 years & can be extended mutually
	5	Upper Kolab	320 (4x80)	100%	1) 15.04.1988 2) 14.01.1988 3) 13.02.1990 4) 12.8.1993	Date of PPA: 20.11.2009 Term of PPA: 25 years & can be extended mutually
	6	Upper Indravati	600 (4x150)	50%	1) [illegible] 2) 28.02.2000 3) 04.04.2001 4) 30.11.2001	Date of PPA: [illegible] Term of PPA: 25 years & can be extended mutually
	7	Machkund	70 (3x17 + 3x21)	50%	1) 19.09.[illegible] 2) 11.12.[illegible] 3) 04.09.[illegible] 4) 15.01.[illegible] 5) 12.01.[illegible] 6) 12.01.[illegible]	Stipulated 1996 [illegible] 2) 19.9.1974 (Supplementary Agreement) Term of PPA: 25 years & can be extended mutually

24/08/2[illegible]

TP SOUTHERN ODISHA DISTRIBUTION LIMITED

GRIDCO Limited Bhubaneswar-22

[illegible]	[illegible]	[illegible]	[illegible] Capacity (in MW)	[illegible]	[illegible]	[illegible]
[illegible]	[illegible]	[illegible]	[illegible]	[illegible]	[illegible]	[illegible]

B	SMALL HYDRO ELECTRIC POWER PROJECTS					
22	[illegible]	[illegible]	[illegible]	[illegible]	[illegible]	[illegible]
23	[illegible]	[illegible]	[illegible]	[illegible]	do	[illegible]
24	[illegible]	[illegible]	[illegible]	[illegible]	do	[illegible]
25	[illegible]	Kandapada Small Hydro Project, Sitalapur, Cuttack	[illegible]	[illegible]	do	[illegible]
26		[illegible], Dhenkanal, Cuttack	[illegible]		do	[illegible]
	Sub Total		53.15			
C	BIO MASS POWER PROJECTS					
[illegible]	[illegible]	[illegible]	[illegible]	[illegible]	[illegible]	[illegible]
	Sub Total		20			
	TOTAL		415.15			

OUT SIDE THE STATE

A	SOLAR					
1	[illegible]	[illegible]	[illegible]	[illegible]	do	[illegible]
2	[illegible] (Developed by NTPC)	[illegible]	5	[illegible]	do	[illegible]
3	[illegible] (Developed by NTPC)	[illegible]	5	[illegible]	do	[illegible]
4	[illegible]	[illegible]	30	[illegible]	do	20 MW from [illegible] 22 MW from [illegible] 22 MW from [illegible]
5	[illegible]	[illegible]	30	12.06.2014	do	[illegible]
	Sub Total		75			
B	WIND					
6	[illegible]	[illegible]	[illegible]	[illegible]	do	[illegible]
7	[illegible]	[illegible]	50	[illegible]	do	[illegible]
	Sub Total		150			
	Total		225			
	GRAND TOTAL		640.15			

TP SOUTHERN ODISHA DISTRIBUTION LIMITED

GRIDCO Limited Bhubaneswar-22

ANNEXURE – 3

(Sample 11 kV feeder meters dump data)

Main energy registers

History	Billing Dates	Active(I) Total	Reactive(I)-Active(I)	Reactive(E)-Active(I)	Apparent-Active(I) - type 2	2983413
History - 0	----	64765 kWh(I) Tot	5064.85 kVArh(Lg)-Wh(I)	4.1 kVArh(Ld)-Wh(I)	65038 kVAh-Wh(I)	
History - 1	01-Apr-23 12:00:00 AM	64756.45 kWh(I) Tot	5063.9 kVArh(Lg)-Wh(I)	4.1 kVArh(Ld)-Wh(I)	65029.4 kVAh-Wh(I)	
History - 2	01-Mar-23 12:00:00 AM	62416.65 kWh(I) Tot	4883.5 kVArh(Lg)-Wh(I)	4.1 kVArh(Ld)-Wh(I)	62679.9 kVAh-Wh(I)	
History - 3	01-Feb-23 12:00:00 AM	60484.35 kWh(I) Tot	4714.75 kVArh(Lg)-Wh(I)	4.1 kVArh(Ld)-Wh(I)	60736.45 kVAh-Wh(I)	
History - 4	01-Jan-23 12:00:00 AM	58486.45 kWh(I) Tot	4589.7 kVArh(Lg)-Wh(I)	3.9 kVArh(Ld)-Wh(I)	58731.5 kVAh-Wh(I)	
History - 5	01-Dec-22 12:00:00 AM	56350.5 kWh(I) Tot	4452.85 kVArh(Lg)-Wh(I)	3.8 kVArh(Ld)-Wh(I)	56587.9 kVAh-Wh(I)	
History - 6	01-Nov-22 12:00:00 AM	54026.45 kWh(I) Tot	4323.35 kVArh(Lg)-Wh(I)	3.8 kVArh(Ld)-Wh(I)	54258 kVAh-Wh(I)	
History - 7	01-Oct-22 12:00:00 AM	51253.25 kWh(I) Tot	4132.35 kVArh(Lg)-Wh(I)	3.8 kVArh(Ld)-Wh(I)	51475.7 kVAh-Wh(I)	
History - 8	01-Sep-22 12:00:00 AM	48217.3 kWh(I) Tot	3886.35 kVArh(Lg)-Wh(I)	3.8 kVArh(Ld)-Wh(I)	48427.2 kVAh-Wh(I)	
History - 9	01-Aug-22 12:00:00 AM	45212.35 kWh(I) Tot	3631.05 kVArh(Lg)-Wh(I)	3.8 kVArh(Ld)-Wh(I)	45408.8 kVAh-Wh(I)	
History - 10	01-Jul-22 12:00:00 AM	42001.45 kWh(I) Tot	3349.2 kVArh(Lg)-Wh(I)	3.8 kVArh(Ld)-Wh(I)	42182.75 kVAh-Wh(I)	
History - 11	01-Jun-22 12:00:00 AM	38966.05 kWh(I) Tot	3062.6 kVArh(Lg)-Wh(I)	3.8 kVArh(Ld)-Wh(I)	39131.3 kVAh-Wh(I)	
History - 12	01-May-22 12:00:00 AM	36028.3 kWh(I) Tot	2780.65 kVArh(Lg)-Wh(I)	3.8 kVArh(Ld)-Wh(I)	36177.35 kVAh-Wh(I)	

Main energy registers

History	Billing Dates	Active(I) Total	Reactive(I)-Active(I)	Reactive(E)-Active(I)	Apparent-Active(I) - type 2	2983533
History - 0	----	57234.65 kWh(I) Tot	9209.85 kVArh(Lg)-Wh(I)	0.15 kVArh(Ld)-Wh(I)	58117.5 kVAh-Wh(I)	
History - 1	01-Apr-23 12:00:00 AM	56986.4 kWh(I) Tot	9175.55 kVArh(Lg)-Wh(I)	0.15 kVArh(Ld)-Wh(I)	57866.55 kVAh-Wh(I)	
History - 2	01-Mar-23 12:00:00 AM	54930.45 kWh(I) Tot	8897.9 kVArh(Lg)-Wh(I)	0.15 kVArh(Ld)-Wh(I)	55788.75 kVAh-Wh(I)	
History - 3	01-Feb-23 12:00:00 AM	53169.5 kWh(I) Tot	8669.65 kVArh(Lg)-Wh(I)	0.1 kVArh(Ld)-Wh(I)	54009.55 kVAh-Wh(I)	
History - 4	01-Jan-23 12:00:00 AM	51190.3 kWh(I) Tot	8378.25 kVArh(Lg)-Wh(I)	0 kVArh(Ld)-Wh(I)	52003.7 kVAh-Wh(I)	
History - 5	01-Dec-22 12:00:00 AM	49233.65 kWh(I) Tot	8078.6 kVArh(Lg)-Wh(I)	0 kVArh(Ld)-Wh(I)	50018.4 kVAh-Wh(I)	
History - 6	01-Nov-22 12:00:00 AM	47425.75 kWh(I) Tot	7844.85 kVArh(Lg)-Wh(I)	0 kVArh(Ld)-Wh(I)	48191.25 kVAh-Wh(I)	
History - 7	01-Oct-22 12:00:00 AM	45574.5 kWh(I) Tot	7598.65 kVArh(Lg)-Wh(I)	0 kVArh(Ld)-Wh(I)	46320.5 kVAh-Wh(I)	
History - 8	01-Sep-22 12:00:00 AM	43579.35 kWh(I) Tot	7333.95 kVArh(Lg)-Wh(I)	0 kVArh(Ld)-Wh(I)	44305.05 kVAh-Wh(I)	
History - 9	01-Aug-22 12:00:00 AM	41521.8 kWh(I) Tot	7063 kVArh(Lg)-Wh(I)	0 kVArh(Ld)-Wh(I)	42226.6 kVAh-Wh(I)	
History - 10	01-Jul-22 12:00:00 AM	39338.15 kWh(I) Tot	6715.65 kVArh(Lg)-Wh(I)	0 kVArh(Ld)-Wh(I)	40011.9 kVAh-Wh(I)	
History - 11	01-Jun-22 12:00:00 AM	37129.3 kWh(I) Tot	6346.6 kVArh(Lg)-Wh(I)	0 kVArh(Ld)-Wh(I)	37769.2 kVAh-Wh(I)	
History - 12	01-May-22 12:00:00 AM	34878.15 kWh(I) Tot	5957.35 kVArh(Lg)-Wh(I)	0 kVArh(Ld)-Wh(I)	35481.3 kVAh-Wh(I)	

Main energy registers

History	Billing Dates	Active(I) Total	Reactive(I)-Active(I)	Reactive(E)-Active(I)	Apparent-Active(I) - type 2	2984511
History - 0	----	39823.85 kWh(I) Tot	8070.55 kVArh(Lg)-Wh(I)	0 kVArh(Ld)-Wh(I)	40745.25 kVAh-Wh(I)	
History - 1	01-Apr-23 12:00:00 AM	39785 kWh(I) Tot	8062.35 kVArh(Lg)-Wh(I)	0 kVArh(Ld)-Wh(I)	40705.4 kVAh-Wh(I)	
History - 2	01-Mar-23 12:00:00 AM	37919.8 kWh(I) Tot	7669.25 kVArh(Lg)-Wh(I)	0 kVArh(Ld)-Wh(I)	38794.6 kVAh-Wh(I)	
History - 3	01-Feb-23 12:00:00 AM	36397 kWh(I) Tot	7297.3 kVArh(Lg)-Wh(I)	0 kVArh(Ld)-Wh(I)	37221.5 kVAh-Wh(I)	
History - 4	01-Jan-23 12:00:00 AM	34879.35 kWh(I) Tot	6954.65 kVArh(Lg)-Wh(I)	0 kVArh(Ld)-Wh(I)	35659.9 kVAh-Wh(I)	
History - 5	01-Dec-22 12:00:00 AM	33397.3 kWh(I) Tot	6620.65 kVArh(Lg)-Wh(I)	0 kVArh(Ld)-Wh(I)	34135.15 kVAh-Wh(I)	
History - 6	01-Nov-22 12:00:00 AM	31785.6 kWh(I) Tot	6270.6 kVArh(Lg)-Wh(I)	0 kVArh(Ld)-Wh(I)	32481.55 kVAh-Wh(I)	
History - 7	01-Oct-22 12:00:00 AM	29993.25 kWh(I) Tot	5937.45 kVArh(Lg)-Wh(I)	0 kVArh(Ld)-Wh(I)	30655.65 kVAh-Wh(I)	
History - 8	01-Sep-22 12:00:00 AM	28098.55 kWh(I) Tot	5593.2 kVArh(Lg)-Wh(I)	0 kVArh(Ld)-Wh(I)	28727.75 kVAh-Wh(I)	
History - 9	01-Aug-22 12:00:00 AM	26117.65 kWh(I) Tot	5243.3 kVArh(Lg)-Wh(I)	0 kVArh(Ld)-Wh(I)	26713.7 kVAh-Wh(I)	
History - 10	01-Jul-22 12:00:00 AM	23942.3 kWh(I) Tot	4810.6 kVArh(Lg)-Wh(I)	0 kVArh(Ld)-Wh(I)	24492.35 kVAh-Wh(I)	
History - 11	01-Jun-22 12:00:00 AM	21730.65 kWh(I) Tot	4361.15 kVArh(Lg)-Wh(I)	0 kVArh(Ld)-Wh(I)	22232.25 kVAh-Wh(I)	
History - 12	01-May-22 12:00:00 AM	19463.85 kWh(I) Tot	3866.6 kVArh(Lg)-Wh(I)	0 kVArh(Ld)-Wh(I)	19908.25 kVAh-Wh(I)	

Main energy registers

History	Billing Dates	Active(I) Total	Reactive(I)-Active(I)	Reactive(E)-Active(I)	Apparent-Active(I) - type 2	2984515
History - 0	----	18040.95 kWh(I) Tot	6137.55 kVArh(Lg)-Wh(I)	0 kVArh(Ld)-Wh(I)	19157.25 kVAh-Wh(I)	
History - 1	01-Apr-23 12:00:00 AM	17914.6 kWh(I) Tot	6100.5 kVArh(Lg)-Wh(I)	0 kVArh(Ld)-Wh(I)	19025.2 kVAh-Wh(I)	
History - 2	01-Mar-23 12:00:00 AM	17277 kWh(I) Tot	5905.75 kVArh(Lg)-Wh(I)	0 kVArh(Ld)-Wh(I)	18356.5 kVAh-Wh(I)	
History - 3	01-Feb-23 12:00:00 AM	16784.3 kWh(I) Tot	5727.45 kVArh(Lg)-Wh(I)	0 kVArh(Ld)-Wh(I)	17830 kVAh-Wh(I)	
History - 4	01-Jan-23 12:00:00 AM	16325.1 kWh(I) Tot	5557.8 kVArh(Lg)-Wh(I)	0 kVArh(Ld)-Wh(I)	17336.75 kVAh-Wh(I)	
History - 5	01-Dec-22 12:00:00 AM	15884.25 kWh(I) Tot	5402.2 kVArh(Lg)-Wh(I)	0 kVArh(Ld)-Wh(I)	16865.1 kVAh-Wh(I)	
History - 6	01-Nov-22 12:00:00 AM	15249.3 kWh(I) Tot	5182 kVArh(Lg)-Wh(I)	0 kVArh(Ld)-Wh(I)	16190.2 kVAh-Wh(I)	
History - 7	01-Oct-22 12:00:00 AM	14768.85 kWh(I) Tot	5021.85 kVArh(Lg)-Wh(I)	0 kVArh(Ld)-Wh(I)	15682.2 kVAh-Wh(I)	
History - 8	01-Sep-22 12:00:00 AM	14072.45 kWh(I) Tot	4809.55 kVArh(Lg)-Wh(I)	0 kVArh(Ld)-Wh(I)	14952.3 kVAh-Wh(I)	
History - 9	01-Aug-22 12:00:00 AM	13712.45 kWh(I) Tot	4686.1 kVArh(Lg)-Wh(I)	0 kVArh(Ld)-Wh(I)	14570.05 kVAh-Wh(I)	
History - 10	01-Jul-22 12:00:00 AM	12877.45 kWh(I) Tot	4385.25 kVArh(Lg)-Wh(I)	0 kVArh(Ld)-Wh(I)	13679.3 kVAh-Wh(I)	
History - 11	01-Jun-22 12:00:00 AM	12072.1 kWh(I) Tot	4107.7 kVArh(Lg)-Wh(I)	0 kVArh(Ld)-Wh(I)	12824.45 kVAh-Wh(I)	
History - 12	01-May-22 12:00:00 AM	11245.55 kWh(I) Tot	3829.55 kVArh(Lg)-Wh(I)	0 kVArh(Ld)-Wh(I)	11948.9 kVAh-Wh(I)	

Main energy registers

History	Billing Dates	Active(I) Total	Reactive(I)-Active(I)	Reactive(E)-Active(I)	Apparent-Active(I) - type 2	2984530
History - 0	----	37185.95 kWh(I) Tot	4799.55 kVArh(Lg)-Wh(I)	1.6 kVArh(Ld)-Wh(I)	37570.7 kVAh-Wh(I)	
History - 1	01-Apr-23 12:00:00 AM	37043.35 kWh(I) Tot	4783.15 kVArh(Lg)-Wh(I)	1.6 kVArh(Ld)-Wh(I)	37427 kVAh-Wh(I)	
History - 2	01-Mar-23 12:00:00 AM	35741.6 kWh(I) Tot	4612.65 kVArh(Lg)-Wh(I)	1.5 kVArh(Ld)-Wh(I)	36111.9 kVAh-Wh(I)	
History - 3	01-Feb-23 12:00:00 AM	34600.2 kWh(I) Tot	4444.55 kVArh(Lg)-Wh(I)	1.45 kVArh(Ld)-Wh(I)	34955.5 kVAh-Wh(I)	
History - 4	01-Jan-23 12:00:00 AM	33428.95 kWh(I) Tot	4288.1 kVArh(Lg)-Wh(I)	1.35 kVArh(Ld)-Wh(I)	33770.5 kVAh-Wh(I)	
History - 5	01-Dec-22 12:00:00 AM	32205.75 kWh(I) Tot	4102 kVArh(Lg)-Wh(I)	1.3 kVArh(Ld)-Wh(I)	32528.15 kVAh-Wh(I)	
History - 6	01-Nov-22 12:00:00 AM	30963.75 kWh(I) Tot	3952.9 kVArh(Lg)-Wh(I)	1.1 kVArh(Ld)-Wh(I)	31273.3 kVAh-Wh(I)	
History - 7	01-Oct-22 12:00:00 AM	29619.35 kWh(I) Tot	3825.25 kVArh(Lg)-Wh(I)	1 kVArh(Ld)-Wh(I)	29921.25 kVAh-Wh(I)	
History - 8	01-Sep-22 12:00:00 AM	28244.05 kWh(I) Tot	3668.65 kVArh(Lg)-Wh(I)	0.95 kVArh(Ld)-Wh(I)	28534.65 kVAh-Wh(I)	
History - 9	01-Aug-22 12:00:00 AM	26769.25 kWh(I) Tot	3452.25 kVArh(Lg)-Wh(I)	0.95 kVArh(Ld)-Wh(I)	27039.3 kVAh-Wh(I)	
History - 10	01-Jul-22 12:00:00 AM	25257.2 kWh(I) Tot	3218.8 kVArh(Lg)-Wh(I)	0.95 kVArh(Ld)-Wh(I)	25503.85 kVAh-Wh(I)	
History - 11	01-Jun-22 12:00:00 AM	23795.85 kWh(I) Tot	3001.55 kVArh(Lg)-Wh(I)	0.95 kVArh(Ld)-Wh(I)	24023.8 kVAh-Wh(I)	
History - 12	01-May-22 12:00:00 AM	22255 kWh(I) Tot	2763.55 kVArh(Lg)-Wh(I)	0.9 kVArh(Ld)-Wh(I)	22462.7 kVAh-Wh(I)	

Main energy registers

History	Billing Dates	Active(I) Total	Reactive(I)-Active(I)	Reactive(E)-Active(I)	Apparent-Active(I) - type 2	2984533
History - 0	----	34756.1 kWh(I) Tot	4109.4 kVArh(Lg)-Wh(I)	3.55 kVArh(Ld)-Wh(I)	35059.1 kVAh-Wh(I)	
History - 1	01-Apr-23 12:00:00 AM	34613.7 kWh(I) Tot	4092.8 kVArh(Lg)-Wh(I)	3.55 kVArh(Ld)-Wh(I)	34915.55 kVAh-Wh(I)	
History - 2	01-Mar-23 12:00:00 AM	33422.5 kWh(I) Tot	3948.55 kVArh(Lg)-Wh(I)	3.55 kVArh(Ld)-Wh(I)	33713.85 kVAh-Wh(I)	
History - 3	01-Feb-23 12:00:00 AM	32449.15 kWh(I) Tot	3816.35 kVArh(Lg)-Wh(I)	3.55 kVArh(Ld)-Wh(I)	32729.25 kVAh-Wh(I)	
History - 4	01-Jan-23 12:00:00 AM	31410.45 kWh(I) Tot	3691.05 kVArh(Lg)-Wh(I)	3.55 kVArh(Ld)-Wh(I)	31680.2 kVAh-Wh(I)	
History - 5	01-Dec-22 12:00:00 AM	30368.2 kWh(I) Tot	3560 kVArh(Lg)-Wh(I)	3.55 kVArh(Ld)-Wh(I)	30626.3 kVAh-Wh(I)	
History - 6	01-Nov-22 12:00:00 AM	28939.75 kWh(I) Tot	3399.7 kVArh(Lg)-Wh(I)	3.55 kVArh(Ld)-Wh(I)	29185.6 kVAh-Wh(I)	
History - 7	01-Oct-22 12:00:00 AM	27692.35 kWh(I) Tot	3282.05 kVArh(Lg)-Wh(I)	3.55 kVArh(Ld)-Wh(I)	27931.25 kVAh-Wh(I)	
History - 8	01-Sep-22 12:00:00 AM	26400.65 kWh(I) Tot	3142.8 kVArh(Lg)-Wh(I)	3.55 kVArh(Ld)-Wh(I)	26630.65 kVAh-Wh(I)	
History - 9	01-Aug-22 12:00:00 AM	25398.1 kWh(I) Tot	3039.2 kVArh(Lg)-Wh(I)	3.55 kVArh(Ld)-Wh(I)	25621.7 kVAh-Wh(I)	
History - 10	01-Jul-22 12:00:00 AM	23966 kWh(I) Tot	2878.65 kVArh(Lg)-Wh(I)	3.55 kVArh(Ld)-Wh(I)	24179.1 kVAh-Wh(I)	
History - 11	01-Jun-22 12:00:00 AM	22565.45 kWh(I) Tot	2694.65 kVArh(Lg)-Wh(I)	3.55 kVArh(Ld)-Wh(I)	22764.85 kVAh-Wh(I)	
History - 12	01-May-22 12:00:00 AM	21115.2 kWh(I) Tot	2490.5 kVArh(Lg)-Wh(I)	3.55 kVArh(Ld)-Wh(I)	21298.85 kVAh-Wh(I)	

Main energy registers

History	Billing Dates	Active(I) Total	Reactive(I)-Active(I)	Reactive(E)-Active(I)	Apparent-Active(I) - type 2	2984555
History - 0	----	39237.75 kWh(I) Tot	6497.55 kVArh(Lg)-Wh(I)	0.25 kVArh(Ld)-Wh(I)	39863.45 kVAh-Wh(I)	
History - 1	01-Apr-23 12:00:00 AM	38794.1 kWh(I) Tot	6421.25 kVArh(Lg)-Wh(I)	0.25 kVArh(Ld)-Wh(I)	39412.5 kVAh-Wh(I)	
History - 2	01-Mar-23 12:00:00 AM	37112.9 kWh(I) Tot	6123.45 kVArh(Lg)-Wh(I)	0.25 kVArh(Ld)-Wh(I)	37701.3 kVAh-Wh(I)	
History - 3	01-Feb-23 12:00:00 AM	35714.95 kWh(I) Tot	5803.4 kVArh(Lg)-Wh(I)	0.25 kVArh(Ld)-Wh(I)	36261.55 kVAh-Wh(I)	
History - 4	01-Jan-23 12:00:00 AM	34341.5 kWh(I) Tot	5487.95 kVArh(Lg)-Wh(I)	0.25 kVArh(Ld)-Wh(I)	34845.1 kVAh-Wh(I)	
History - 5	01-Dec-22 12:00:00 AM	33029.7 kWh(I) Tot	5230.85 kVArh(Lg)-Wh(I)	0.25 kVArh(Ld)-Wh(I)	33501.6 kVAh-Wh(I)	
History - 6	01-Nov-22 12:00:00 AM	31599 kWh(I) Tot	4987 kVArh(Lg)-Wh(I)	0.25 kVArh(Ld)-Wh(I)	32045.65 kVAh-Wh(I)	
History - 7	01-Oct-22 12:00:00 AM	29854.2 kWh(I) Tot	4700.3 kVArh(Lg)-Wh(I)	0.25 kVArh(Ld)-Wh(I)	30274.15 kVAh-Wh(I)	
History - 8	01-Sep-22 12:00:00 AM	27966.05 kWh(I) Tot	4367.2 kVArh(Lg)-Wh(I)	0.25 kVArh(Ld)-Wh(I)	28353.5 kVAh-Wh(I)	
History - 9	01-Aug-22 12:00:00 AM	26114.15 kWh(I) Tot	4051.5 kVArh(Lg)-Wh(I)	0.05 kVArh(Ld)-Wh(I)	26471.95 kVAh-Wh(I)	
History - 10	01-Jul-22 12:00:00 AM	24104.2 kWh(I) Tot	3751.95 kVArh(Lg)-Wh(I)	0.05 kVArh(Ld)-Wh(I)	24437.1 kVAh-Wh(I)	
History - 11	01-Jun-22 12:00:00 AM	22171.05 kWh(I) Tot	3447.8 kVArh(Lg)-Wh(I)	0.05 kVArh(Ld)-Wh(I)	22477.8 kVAh-Wh(I)	
History - 12	01-May-22 12:00:00 AM	20880.3 kWh(I) Tot	3238.85 kVArh(Lg)-Wh(I)	0.05 kVArh(Ld)-Wh(I)	21168.8 kVAh-Wh(I)	

Main energy registers

History	Billing Dates	Active(I) Total	Reactive(I)-Active(I)	Reactive(E)-Active(I)	Apparent-Active(I) - type 2	2984558
History - 0	----	32516.25 kWh(I) Tot	5188.55 kVArh(Lg)-Wh(I)	0 kVArh(Ld)-Wh(I)	33005.4 kVAh-Wh(I)	
History - 1	01-Apr-23 12:00:00 AM	32223.4 kWh(I) Tot	5141.2 kVArh(Lg)-Wh(I)	0 kVArh(Ld)-Wh(I)	32708.25 kVAh-Wh(I)	
History - 2	01-Mar-23 12:00:00 AM	30714.35 kWh(I) Tot	4898.35 kVArh(Lg)-Wh(I)	0 kVArh(Ld)-Wh(I)	31176.95 kVAh-Wh(I)	
History - 3	01-Feb-23 12:00:00 AM	29473.55 kWh(I) Tot	4695 kVArh(Lg)-Wh(I)	0 kVArh(Ld)-Wh(I)	29916.4 kVAh-Wh(I)	
History - 4	01-Jan-23 12:00:00 AM	28179.55 kWh(I) Tot	4497.3 kVArh(Lg)-Wh(I)	0 kVArh(Ld)-Wh(I)	28602.85 kVAh-Wh(I)	
History - 5	01-Dec-22 12:00:00 AM	26878.7 kWh(I) Tot	4260.3 kVArh(Lg)-Wh(I)	0 kVArh(Ld)-Wh(I)	27273 kVAh-Wh(I)	
History - 6	01-Nov-22 12:00:00 AM	25511.25 kWh(I) Tot	4015.85 kVArh(Lg)-Wh(I)	0 kVArh(Ld)-Wh(I)	25879 kVAh-Wh(I)	
History - 7	01-Oct-22 12:00:00 AM	23876.35 kWh(I) Tot	3743.6 kVArh(Lg)-Wh(I)	0 kVArh(Ld)-Wh(I)	24218.5 kVAh-Wh(I)	
History - 8	01-Sep-22 12:00:00 AM	22175.4 kWh(I) Tot	3465.95 kVArh(Lg)-Wh(I)	0 kVArh(Ld)-Wh(I)	22492.4 kVAh-Wh(I)	
History - 9	01-Aug-22 12:00:00 AM	20374.1 kWh(I) Tot	3166.85 kVArh(Lg)-Wh(I)	0 kVArh(Ld)-Wh(I)	20663.5 kVAh-Wh(I)	
History - 10	01-Jul-22 12:00:00 AM	18427.55 kWh(I) Tot	2834.05 kVArh(Lg)-Wh(I)	0 kVArh(Ld)-Wh(I)	18685.75 kVAh-Wh(I)	
History - 11	01-Jun-22 12:00:00 AM	16501.05 kWh(I) Tot	2524.75 kVArh(Lg)-Wh(I)	0 kVArh(Ld)-Wh(I)	16732.05 kVAh-Wh(I)	
History - 12	01-May-22 12:00:00 AM	14503.7 kWh(I) Tot	2202.25 kVArh(Lg)-Wh(I)	0 kVArh(Ld)-Wh(I)	14706.4 kVAh-Wh(I)	

Main energy registers

History	Billing Dates	Active(I) Total	Reactive(I)-Active(I)	Reactive(E)-Active(I)	Apparent-Active(I) - type 2	2984561
History - 0	----	13524.85 kWh(I) Tot	2310.4 kVArh(Lg)-Wh(I)	0 kVArh(Ld)-Wh(I)	13765.1 kVAh-Wh(I)	
History - 1	01-Apr-23 12:00:00 AM	13517.55 kWh(I) Tot	2309.1 kVArh(Lg)-Wh(I)	0 kVArh(Ld)-Wh(I)	13757.65 kVAh-Wh(I)	
History - 2	01-Mar-23 12:00:00 AM	13112.1 kWh(I) Tot	2241.3 kVArh(Lg)-Wh(I)	0 kVArh(Ld)-Wh(I)	13345.3 kVAh-Wh(I)	
History - 3	01-Feb-23 12:00:00 AM	12770.15 kWh(I) Tot	2171.15 kVArh(Lg)-Wh(I)	0 kVArh(Ld)-Wh(I)	12994.45 kVAh-Wh(I)	
History - 4	01-Jan-23 12:00:00 AM	12390.5 kWh(I) Tot	2080.5 kVArh(Lg)-Wh(I)	0 kVArh(Ld)-Wh(I)	12601.65 kVAh-Wh(I)	
History - 5	01-Dec-22 12:00:00 AM	12001.95 kWh(I) Tot	1998.45 kVArh(Lg)-Wh(I)	0 kVArh(Ld)-Wh(I)	12202.25 kVAh-Wh(I)	
History - 6	01-Nov-22 12:00:00 AM	11595.45 kWh(I) Tot	1931.45 kVArh(Lg)-Wh(I)	0 kVArh(Ld)-Wh(I)	11788.7 kVAh-Wh(I)	
History - 7	01-Oct-22 12:00:00 AM	11080 kWh(I) Tot	1841.3 kVArh(Lg)-Wh(I)	0 kVArh(Ld)-Wh(I)	11263.9 kVAh-Wh(I)	
History - 8	01-Sep-22 12:00:00 AM	10538.4 kWh(I) Tot	1748.8 kVArh(Lg)-Wh(I)	0 kVArh(Ld)-Wh(I)	10713.15 kVAh-Wh(I)	
History - 9	01-Aug-22 12:00:00 AM	9981.25 kWh(I) Tot	1653.05 kVArh(Lg)-Wh(I)	0 kVArh(Ld)-Wh(I)	10146.45 kVAh-Wh(I)	
History - 10	01-Jul-22 12:00:00 AM	9405.6 kWh(I) Tot	1559.15 kVArh(Lg)-Wh(I)	0 kVArh(Ld)-Wh(I)	9562 kVAh-Wh(I)	
History - 11	01-Jun-22 12:00:00 AM	8845 kWh(I) Tot	1466.9 kVArh(Lg)-Wh(I)	0 kVArh(Ld)-Wh(I)	8992.9 kVAh-Wh(I)	
History - 12	01-May-22 12:00:00 AM	8303.45 kWh(I) Tot	1373.85 kVArh(Lg)-Wh(I)	0 kVArh(Ld)-Wh(I)	8442.45 kVAh-Wh(I)	

Main energy registers

History	Billing Dates	Active(I) Total	Reactive(I)-Active(I)	Reactive(E)-Active(I)	Apparent-Active(I) - type 2	2984566
History - 0	----	11607.7 kWh(I) Tot	565.5 kVArh(Lg)-Wh(I)	26.2 kVArh(Ld)-Wh(I)	11637.95 kVAh-Wh(I)	
History - 1	01-Apr-23 12:00:00 AM	11549.55 kWh(I) Tot	562.2 kVArh(Lg)-Wh(I)	26.2 kVArh(Ld)-Wh(I)	11579.7 kVAh-Wh(I)	
History - 2	01-Mar-23 12:00:00 AM	11066.55 kWh(I) Tot	526.3 kVArh(Lg)-Wh(I)	25.95 kVArh(Ld)-Wh(I)	11094.2 kVAh-Wh(I)	
History - 3	01-Feb-23 12:00:00 AM	10666 kWh(I) Tot	493.3 kVArh(Lg)-Wh(I)	25.55 kVArh(Ld)-Wh(I)	10691 kVAh-Wh(I)	
History - 4	01-Jan-23 12:00:00 AM	10248.65 kWh(I) Tot	465.55 kVArh(Lg)-Wh(I)	24.1 kVArh(Ld)-Wh(I)	10271.55 kVAh-Wh(I)	
History - 5	01-Dec-22 12:00:00 AM	9826.7 kWh(I) Tot	437.9 kVArh(Lg)-Wh(I)	23.1 kVArh(Ld)-Wh(I)	9847.65 kVAh-Wh(I)	
History - 6	01-Nov-22 12:00:00 AM	9385.6 kWh(I) Tot	422.25 kVArh(Lg)-Wh(I)	19.3 kVArh(Ld)-Wh(I)	9405.2 kVAh-Wh(I)	
History - 7	01-Oct-22 12:00:00 AM	8879.4 kWh(I) Tot	410.45 kVArh(Lg)-Wh(I)	17.55 kVArh(Ld)-Wh(I)	8898.45 kVAh-Wh(I)	
History - 8	01-Sep-22 12:00:00 AM	8351.8 kWh(I) Tot	387.65 kVArh(Lg)-Wh(I)	17.25 kVArh(Ld)-Wh(I)	8369.75 kVAh-Wh(I)	
History - 9	01-Aug-22 12:00:00 AM	7741.05 kWh(I) Tot	358 kVArh(Lg)-Wh(I)	17 kVArh(Ld)-Wh(I)	7757.75 kVAh-Wh(I)	
History - 10	01-Jul-22 12:00:00 AM	7117.55 kWh(I) Tot	325.3 kVArh(Lg)-Wh(I)	16.95 kVArh(Ld)-Wh(I)	7132.85 kVAh-Wh(I)	
History - 11	01-Jun-22 12:00:00 AM	6524.7 kWh(I) Tot	281.35 kVArh(Lg)-Wh(I)	16.95 kVArh(Ld)-Wh(I)	6537.8 kVAh-Wh(I)	
History - 12	01-May-22 12:00:00 AM	5917.25 kWh(I) Tot	234.75 kVArh(Lg)-Wh(I)	16.95 kVArh(Ld)-Wh(I)	5927.95 kVAh-Wh(I)	

Main energy registers

History	Billing Dates	Active(I) Total	Reactive(I)-Active(I)	Reactive(E)-Active(I)	Apparent-Active(I) - type 2	2984585
History - 0	----	27602.9 kWh(I) Tot	7452.75 kVArh(Lg)-Wh(I)	3.35 kVArh(Ld)-Wh(I)	28721.05 kVAh-Wh(I)	
History - 1	01-Apr-23 12:00:00 AM	27564.35 kWh(I) Tot	7444.2 kVArh(Lg)-Wh(I)	3.35 kVArh(Ld)-Wh(I)	28681.45 kVAh-Wh(I)	
History - 2	01-Mar-23 12:00:00 AM	25828.85 kWh(I) Tot	7103.3 kVArh(Lg)-Wh(I)	3.35 kVArh(Ld)-Wh(I)	26908.9 kVAh-Wh(I)	
History - 3	01-Feb-23 12:00:00 AM	24328.85 kWh(I) Tot	6792.65 kVArh(Lg)-Wh(I)	1.55 kVArh(Ld)-Wh(I)	25370.8 kVAh-Wh(I)	
History - 4	01-Jan-23 12:00:00 AM	22744.85 kWh(I) Tot	6479.5 kVArh(Lg)-Wh(I)	1.55 kVArh(Ld)-Wh(I)	23752.65 kVAh-Wh(I)	
History - 5	01-Dec-22 12:00:00 AM	21335.35 kWh(I) Tot	6145.15 kVArh(Lg)-Wh(I)	1.55 kVArh(Ld)-Wh(I)	22299.85 kVAh-Wh(I)	
History - 6	01-Nov-22 12:00:00 AM	20602.8 kWh(I) Tot	5943.45 kVArh(Lg)-Wh(I)	1.5 kVArh(Ld)-Wh(I)	21537.05 kVAh-Wh(I)	
History - 7	01-Oct-22 12:00:00 AM	19788.55 kWh(I) Tot	5751.9 kVArh(Lg)-Wh(I)	1.5 kVArh(Ld)-Wh(I)	20698.25 kVAh-Wh(I)	
History - 8	01-Sep-22 12:00:00 AM	18924.2 kWh(I) Tot	5529 kVArh(Lg)-Wh(I)	1.5 kVArh(Ld)-Wh(I)	19802.95 kVAh-Wh(I)	
History - 9	01-Aug-22 12:00:00 AM	18037.55 kWh(I) Tot	5299 kVArh(Lg)-Wh(I)	0.1 kVArh(Ld)-Wh(I)	18882.6 kVAh-Wh(I)	
History - 10	01-Jul-22 12:00:00 AM	17040.25 kWh(I) Tot	5038.35 kVArh(Lg)-Wh(I)	0.1 kVArh(Ld)-Wh(I)	17849.2 kVAh-Wh(I)	
History - 11	01-Jun-22 12:00:00 AM	15924.5 kWh(I) Tot	4759.65 kVArh(Lg)-Wh(I)	0.1 kVArh(Ld)-Wh(I)	16696.75 kVAh-Wh(I)	
History - 12	01-May-22 12:00:00 AM	14879.1 kWh(I) Tot	4493.4 kVArh(Lg)-Wh(I)	0.1 kVArh(Ld)-Wh(I)	15615.25 kVAh-Wh(I)	

Main energy registers

History	Billing Dates	Active(I) Total	Reactive(I)-Active(I)	Reactive(E)-Active(I)	Apparent-Active(I) - type 2	2984597
History - 0	----	20060.5 kWh(I) Tot	5294.65 kVArh(Lg)-Wh(I)	8.65 kVArh(Ld)-Wh(I)	20925.35 kVAh-Wh(I)	
History - 1	01-Apr-23 12:00:00 AM	19854.35 kWh(I) Tot	5213.25 kVArh(Lg)-Wh(I)	8.6 kVArh(Ld)-Wh(I)	20703.15 kVAh-Wh(I)	
History - 2	01-Mar-23 12:00:00 AM	18954.2 kWh(I) Tot	4975.6 kVArh(Lg)-Wh(I)	8.5 kVArh(Ld)-Wh(I)	19767.75 kVAh-Wh(I)	
History - 3	01-Feb-23 12:00:00 AM	18124.6 kWh(I) Tot	4818.15 kVArh(Lg)-Wh(I)	8.45 kVArh(Ld)-Wh(I)	18919 kVAh-Wh(I)	
History - 4	01-Jan-23 12:00:00 AM	17358.95 kWh(I) Tot	4703 kVArh(Lg)-Wh(I)	7.6 kVArh(Ld)-Wh(I)	18141.6 kVAh-Wh(I)	
History - 5	01-Dec-22 12:00:00 AM	16813.85 kWh(I) Tot	4628.6 kVArh(Lg)-Wh(I)	5.5 kVArh(Ld)-Wh(I)	17588.25 kVAh-Wh(I)	
History - 6	01-Nov-22 12:00:00 AM	16245.7 kWh(I) Tot	4550.2 kVArh(Lg)-Wh(I)	4.3 kVArh(Ld)-Wh(I)	17011.55 kVAh-Wh(I)	
History - 7	01-Oct-22 12:00:00 AM	15605.65 kWh(I) Tot	4465.5 kVArh(Lg)-Wh(I)	3.65 kVArh(Ld)-Wh(I)	16363.15 kVAh-Wh(I)	
History - 8	01-Sep-22 12:00:00 AM	14826.55 kWh(I) Tot	4310.5 kVArh(Lg)-Wh(I)	3.45 kVArh(Ld)-Wh(I)	15561.05 kVAh-Wh(I)	
History - 9	01-Aug-22 12:00:00 AM	14145.45 kWh(I) Tot	4067.1 kVArh(Lg)-Wh(I)	3.45 kVArh(Ld)-Wh(I)	14834.55 kVAh-Wh(I)	
History - 10	01-Jul-22 12:00:00 AM	13534.6 kWh(I) Tot	3845.25 kVArh(Lg)-Wh(I)	3.25 kVArh(Ld)-Wh(I)	14181.4 kVAh-Wh(I)	
History - 11	01-Jun-22 12:00:00 AM	12704.1 kWh(I) Tot	3507.5 kVArh(Lg)-Wh(I)	3 kVArh(Ld)-Wh(I)	13282.3 kVAh-Wh(I)	
History - 12	01-May-22 12:00:00 AM	11836.2 kWh(I) Tot	3167.1 kVArh(Lg)-Wh(I)	1.4 kVArh(Ld)-Wh(I)	12347.05 kVAh-Wh(I)	

Main energy registers

History	Billing Dates	Active(I) Total	Reactive(I)-Active(I)	Reactive(E)-Active(I)	Apparent-Active(I) - type 2	2984607
History - 0	----	237227.65 kWh(I) Tot	41403.45 kVArh(Lg)-Wh(I)	0.05 kVArh(Ld)-Wh(I)	241629 kVAh-Wh(I)	
History - 1	01-Apr-23 12:00:00 AM	235882.7 kWh(I) Tot	41130.3 kVArh(Lg)-Wh(I)	0.05 kVArh(Ld)-Wh(I)	240252.8 kVAh-Wh(I)	
History - 2	01-Mar-23 12:00:00 AM	227001.85 kWh(I) Tot	39462.25 kVArh(Lg)-Wh(I)	0.05 kVArh(Ld)-Wh(I)	231189.05 kVAh-Wh(I)	
History - 3	01-Feb-23 12:00:00 AM	220667.9 kWh(I) Tot	38500.5 kVArh(Lg)-Wh(I)	0.05 kVArh(Ld)-Wh(I)	224764.95 kVAh-Wh(I)	
History - 4	01-Jan-23 12:00:00 AM	214489.25 kWh(I) Tot	37607.25 kVArh(Lg)-Wh(I)	0.05 kVArh(Ld)-Wh(I)	218500.75 kVAh-Wh(I)	
History - 5	01-Dec-22 12:00:00 AM	208103.8 kWh(I) Tot	36701.2 kVArh(Lg)-Wh(I)	0.05 kVArh(Ld)-Wh(I)	212026.45 kVAh-Wh(I)	
History - 6	01-Nov-22 12:00:00 AM	200348.4 kWh(I) Tot	35239.25 kVArh(Lg)-Wh(I)	0.05 kVArh(Ld)-Wh(I)	204097.25 kVAh-Wh(I)	
History - 7	01-Oct-22 12:00:00 AM	191624.9 kWh(I) Tot	33911.25 kVArh(Lg)-Wh(I)	0.05 kVArh(Ld)-Wh(I)	195257.8 kVAh-Wh(I)	
History - 8	01-Sep-22 12:00:00 AM	182677.85 kWh(I) Tot	32669.75 kVArh(Lg)-Wh(I)	0.05 kVArh(Ld)-Wh(I)	186214.15 kVAh-Wh(I)	
History - 9	01-Aug-22 12:00:00 AM	174289 kWh(I) Tot	31635.7 kVArh(Lg)-Wh(I)	0.05 kVArh(Ld)-Wh(I)	177752.8 kVAh-Wh(I)	
History - 10	01-Jul-22 12:00:00 AM	165016.95 kWh(I) Tot	30015 kVArh(Lg)-Wh(I)	0.05 kVArh(Ld)-Wh(I)	168321.25 kVAh-Wh(I)	
History - 11	01-Jun-22 12:00:00 AM	154459.65 kWh(I) Tot	27707.5 kVArh(Lg)-Wh(I)	0.05 kVArh(Ld)-Wh(I)	157490.5 kVAh-Wh(I)	
History - 12	01-May-22 12:00:00 AM	144273.55 kWh(I) Tot	25391.15 kVArh(Lg)-Wh(I)	0.05 kVArh(Ld)-Wh(I)	147020.45 kVAh-Wh(	

Main energy registers

History	Billing Dates	Active(I) Total	Reactive(I)-Active(I)	Reactive(E)-Active(I)	Apparent-Active(I) - type 2	2984611
History - 0	----	167235.95 kWh(I) Tot	22231.7 kVArh(Lg)-Wh(I)	0 kVArh(Ld)-Wh(I)	168997.55 kVAh-Wh(I)	
History - 1	01-Apr-23 12:00:00 AM	166287.55 kWh(I) Tot	22095.15 kVArh(Lg)-Wh(I)	0 kVArh(Ld)-Wh(I)	168038.05 kVAh-Wh(I)	
History - 2	01-Mar-23 12:00:00 AM	160620.5 kWh(I) Tot	21337.3 kVArh(Lg)-Wh(I)	0 kVArh(Ld)-Wh(I)	162312.55 kVAh-Wh(I)	
History - 3	01-Feb-23 12:00:00 AM	156954.8 kWh(I) Tot	20860.75 kVArh(Lg)-Wh(I)	0 kVArh(Ld)-Wh(I)	158608.25 kVAh-Wh(I)	
History - 4	01-Jan-23 12:00:00 AM	149804.25 kWh(I) Tot	19900.8 kVArh(Lg)-Wh(I)	0 kVArh(Ld)-Wh(I)	151375.4 kVAh-Wh(I)	
History - 5	01-Dec-22 12:00:00 AM	142791.5 kWh(I) Tot	18940.95 kVArh(Lg)-Wh(I)	0 kVArh(Ld)-Wh(I)	144276.15 kVAh-Wh(I)	
History - 6	01-Nov-22 12:00:00 AM	138513.15 kWh(I) Tot	18354.1 kVArh(Lg)-Wh(I)	0 kVArh(Ld)-Wh(I)	139946.95 kVAh-Wh(I)	
History - 7	01-Oct-22 12:00:00 AM	130349.8 kWh(I) Tot	17272.25 kVArh(Lg)-Wh(I)	0 kVArh(Ld)-Wh(I)	131700.5 kVAh-Wh(I)	
History - 8	01-Sep-22 12:00:00 AM	122177.8 kWh(I) Tot	16117.25 kVArh(Lg)-Wh(I)	0 kVArh(Ld)-Wh(I)	123437.15 kVAh-Wh(I)	
History - 9	01-Aug-22 12:00:00 AM	110130.8 kWh(I) Tot	14485.2 kVArh(Lg)-Wh(I)	0 kVArh(Ld)-Wh(I)	111265.75 kVAh-Wh(I)	
History - 10	01-Jul-22 12:00:00 AM	101178.8 kWh(I) Tot	13201.55 kVArh(Lg)-Wh(I)	0 kVArh(Ld)-Wh(I)	102210.75 kVAh-Wh(I)	
History - 11	01-Jun-22 12:00:00 AM	92626.1 kWh(I) Tot	11894.95 kVArh(Lg)-Wh(I)	0 kVArh(Ld)-Wh(I)	93548.3 kVAh-Wh(I)	
History - 12	01-May-22 12:00:00 AM	83651.4 kWh(I) Tot	10573.35 kVArh(Lg)-Wh(I)	0 kVArh(Ld)-Wh(I)	84466.6 kVAh-Wh(I)	

Main energy registers

History	Billing Dates	Active(I) Total	Reactive(I)-Active(I)	Reactive(E)-Active(I)	Apparent-Active(I) - type 2	2984617
History - 0	----	313895.95 kWh(I) Tot	37170.55 kVArh(Lg)-Wh(I)	0 kVArh(Ld)-Wh(I)	316529.1 kVAh-Wh(I)	
History - 1	01-Apr-23 12:00:00 AM	313573.2 kWh(I) Tot	37130.05 kVArh(Lg)-Wh(I)	0 kVArh(Ld)-Wh(I)	316203.45 kVAh-Wh(I)	
History - 2	01-Mar-23 12:00:00 AM	301617 kWh(I) Tot	35774.35 kVArh(Lg)-Wh(I)	0 kVArh(Ld)-Wh(I)	304154.45 kVAh-Wh(I)	
History - 3	01-Feb-23 12:00:00 AM	292366.55 kWh(I) Tot	34668.65 kVArh(Lg)-Wh(I)	0 kVArh(Ld)-Wh(I)	294818.45 kVAh-Wh(I)	
History - 4	01-Jan-23 12:00:00 AM	282317.9 kWh(I) Tot	33410.4 kVArh(Lg)-Wh(I)	0 kVArh(Ld)-Wh(I)	284663.5 kVAh-Wh(I)	
History - 5	01-Dec-22 12:00:00 AM	271968.3 kWh(I) Tot	32001 kVArh(Lg)-Wh(I)	0 kVArh(Ld)-Wh(I)	274186.95 kVAh-Wh(I)	
History - 6	01-Nov-22 12:00:00 AM	260828.85 kWh(I) Tot	30460.35 kVArh(Lg)-Wh(I)	0 kVArh(Ld)-Wh(I)	262915.35 kVAh-Wh(I)	
History - 7	01-Oct-22 12:00:00 AM	247459.3 kWh(I) Tot	28874.45 kVArh(Lg)-Wh(I)	0 kVArh(Ld)-Wh(I)	249435.45 kVAh-Wh(I)	
History - 8	01-Sep-22 12:00:00 AM	233275.25 kWh(I) Tot	27162.9 kVArh(Lg)-Wh(I)	0 kVArh(Ld)-Wh(I)	235134.65 kVAh-Wh(I)	
History - 9	01-Aug-22 12:00:00 AM	218411.3 kWh(I) Tot	25399.6 kVArh(Lg)-Wh(I)	0 kVArh(Ld)-Wh(I)	220151.3 kVAh-Wh(I)	
History - 10	01-Jul-22 12:00:00 AM	203227.6 kWh(I) Tot	23512.65 kVArh(Lg)-Wh(I)	0 kVArh(Ld)-Wh(I)	204836.15 kVAh-Wh(I)	
History - 11	01-Jun-22 12:00:00 AM	188431.65 kWh(I) Tot	21612.15 kVArh(Lg)-Wh(I)	0 kVArh(Ld)-Wh(I)	189905.3 kVAh-Wh(I)	
History - 12	01-May-22 12:00:00 AM	173376.25 kWh(I) Tot	19570.05 kVArh(Lg)-Wh(I)	0 kVArh(Ld)-Wh(I)	174697.85 kVAh-Wh(I)	

Main energy registers

History	Billing Dates	Active(I) Total	Reactive(I)-Active(I)	Reactive(E)-Active(I)	Apparent-Active(I) - type 2	2984618
History - 0	----	76659.05 kWh(I) Tot	16489 kVArh(Lg)-Wh(I)	0 kVArh(Ld)-Wh(I)	78546.45 kVAh-Wh(I)	
History - 1	01-Apr-23 12:00:00 AM	75929.55 kWh(I) Tot	16314.9 kVArh(Lg)-Wh(I)	0 kVArh(Ld)-Wh(I)	77795.2 kVAh-Wh(I)	
History - 2	01-Mar-23 12:00:00 AM	70865.15 kWh(I) Tot	15119.15 kVArh(Lg)-Wh(I)	0 kVArh(Ld)-Wh(I)	72582.75 kVAh-Wh(I)	
History - 3	01-Feb-23 12:00:00 AM	70865.15 kWh(I) Tot	15119.15 kVArh(Lg)-Wh(I)	0 kVArh(Ld)-Wh(I)	72582.75 kVAh-Wh(I)	
History - 4	01-Jan-23 12:00:00 AM	70865.15 kWh(I) Tot	15119.15 kVArh(Lg)-Wh(I)	0 kVArh(Ld)-Wh(I)	72582.75 kVAh-Wh(I)	
History - 5	01-Dec-22 12:00:00 AM	70865.15 kWh(I) Tot	15119.15 kVArh(Lg)-Wh(I)	0 kVArh(Ld)-Wh(I)	72582.75 kVAh-Wh(I)	
History - 6	01-Nov-22 12:00:00 AM	70865.15 kWh(I) Tot	15119.15 kVArh(Lg)-Wh(I)	0 kVArh(Ld)-Wh(I)	72582.75 kVAh-Wh(I)	
History - 7	01-Oct-22 12:00:00 AM	70865.15 kWh(I) Tot	15119.15 kVArh(Lg)-Wh(I)	0 kVArh(Ld)-Wh(I)	72582.75 kVAh-Wh(I)	
History - 8	01-Sep-22 12:00:00 AM	65997.25 kWh(I) Tot	14125 kVArh(Lg)-Wh(I)	0 kVArh(Ld)-Wh(I)	67606.5 kVAh-Wh(I)	
History - 9	01-Aug-22 12:00:00 AM	59151.65 kWh(I) Tot	12722.55 kVArh(Lg)-Wh(I)	0 kVArh(Ld)-Wh(I)	60606 kVAh-Wh(I)	
History - 10	01-Jul-22 12:00:00 AM	52040.85 kWh(I) Tot	11197.6 kVArh(Lg)-Wh(I)	0 kVArh(Ld)-Wh(I)	53321.45 kVAh-Wh(I)	
History - 11	01-Jun-22 12:00:00 AM	44652 kWh(I) Tot	9540.9 kVArh(Lg)-Wh(I)	0 kVArh(Ld)-Wh(I)	45736.5 kVAh-Wh(I)	
History - 12	01-May-22 12:00:00 AM	36696.55 kWh(I) Tot	7899.9 kVArh(Lg)-Wh(I)	0 kVArh(Ld)-Wh(I)	37601.5 kVAh-Wh(I)	

Main energy registers

History	Billing Dates	Active(I) Total	Reactive(I)-Active(I)	Reactive(E)-Active(I)	Apparent-Active(I) - type 2	2984628
History - 0	----	116164.95 kWh(I) Tot	37579.6 kVArh(Lg)-Wh(I)	0 kVArh(Ld)-Wh(I)	122539.4 kVAh-Wh(I)	
History - 1	01-Apr-23 12:00:00 AM	116051.4 kWh(I) Tot	37538.85 kVArh(Lg)-Wh(I)	0 kVArh(Ld)-Wh(I)	122418.25 kVAh-Wh(I)	
History - 2	01-Mar-23 12:00:00 AM	110309.65 kWh(I) Tot	35779.85 kVArh(Lg)-Wh(I)	0 kVArh(Ld)-Wh(I)	116391.75 kVAh-Wh(I)	
History - 3	01-Feb-23 12:00:00 AM	105960.4 kWh(I) Tot	34455.9 kVArh(Lg)-Wh(I)	0 kVArh(Ld)-Wh(I)	111834.9 kVAh-Wh(I)	
History - 4	01-Jan-23 12:00:00 AM	101270.75 kWh(I) Tot	32997.8 kVArh(Lg)-Wh(I)	0 kVArh(Ld)-Wh(I)	106912.25 kVAh-Wh(I)	
History - 5	01-Dec-22 12:00:00 AM	97293.6 kWh(I) Tot	31581.25 kVArh(Lg)-Wh(I)	0 kVArh(Ld)-Wh(I)	102675.35 kVAh-Wh(I)	
History - 6	01-Nov-22 12:00:00 AM	93166.7 kWh(I) Tot	30162.6 kVArh(Lg)-Wh(I)	0 kVArh(Ld)-Wh(I)	98300.05 kVAh-Wh(I)	
History - 7	01-Oct-22 12:00:00 AM	88232.5 kWh(I) Tot	28564.65 kVArh(Lg)-Wh(I)	0 kVArh(Ld)-Wh(I)	93102.5 kVAh-Wh(I)	
History - 8	01-Sep-22 12:00:00 AM	82996.35 kWh(I) Tot	26997.1 kVArh(Lg)-Wh(I)	0 kVArh(Ld)-Wh(I)	87623.1 kVAh-Wh(I)	
History - 9	01-Aug-22 12:00:00 AM	77877.7 kWh(I) Tot	25410.2 kVArh(Lg)-Wh(I)	0 kVArh(Ld)-Wh(I)	82248.15 kVAh-Wh(I)	
History - 10	01-Jul-22 12:00:00 AM	72399.85 kWh(I) Tot	23704.65 kVArh(Lg)-Wh(I)	0 kVArh(Ld)-Wh(I)	76495.65 kVAh-Wh(I)	
History - 11	01-Jun-22 12:00:00 AM	66897.2 kWh(I) Tot	22129.7 kVArh(Lg)-Wh(I)	0 kVArh(Ld)-Wh(I)	70757.2 kVAh-Wh(I)	
History - 12	01-May-22 12:00:00 AM	60941.4 kWh(I) Tot	20495.6 kVArh(Lg)-Wh(I)	0 kVArh(Ld)-Wh(I)	64567.8 kVAh-Wh(I)	

Main energy registers

History	Billing Dates	Active(I) Total	Reactive(I)-Active(I)	Reactive(E)-Active(I)	Apparent-Active(I) - type 2	2984629
History - 0	----	338676.3 kWh(I) Tot	57069.65 kVArh(Lg)-Wh(I)	272.7 kVArh(Ld)-Wh(I)	338676.3 kVAh-Wh(I)	
History - 1	01-Apr-23 12:00:00 AM	335685.6 kWh(I) Tot	56310.7 kVArh(Lg)-Wh(I)	271.9 kVArh(Ld)-Wh(I)	335697.75 kVAh-Wh(I)	
History - 2	01-Mar-23 12:00:00 AM	321768.6 kWh(I) Tot	53372.55 kVArh(Lg)-Wh(I)	261.95 kVArh(Ld)-Wh(I)	321860.8 kVAh-Wh(I)	
History - 3	01-Feb-23 12:00:00 AM	304221.7 kWh(I) Tot	50892.55 kVArh(Lg)-Wh(I)	198.95 kVArh(Ld)-Wh(I)	304457.2 kVAh-Wh(I)	
History - 4	01-Jan-23 12:00:00 AM	294009.2 kWh(I) Tot	48328.65 kVArh(Lg)-Wh(I)	196.95 kVArh(Ld)-Wh(I)	294283.5 kVAh-Wh(I)	
History - 5	01-Dec-22 12:00:00 AM	284694.15 kWh(I) Tot	45919.25 kVArh(Lg)-Wh(I)	193 kVArh(Ld)-Wh(I)	284914.85 kVAh-Wh(I)	
History - 6	01-Nov-22 12:00:00 AM	271778.65 kWh(I) Tot	43303.75 kVArh(Lg)-Wh(I)	170.4 kVArh(Ld)-Wh(I)	271863 kVAh-Wh(I)	
History - 7	01-Oct-22 12:00:00 AM	261631.3 kWh(I) Tot	40957.7 kVArh(Lg)-Wh(I)	166.95 kVArh(Ld)-Wh(I)	261633.65 kVAh-Wh(I)	
History - 8	01-Sep-22 12:00:00 AM	251165.7 kWh(I) Tot	38799.95 kVArh(Lg)-Wh(I)	166.1 kVArh(Ld)-Wh(I)	251168.05 kVAh-Wh(I)	
History - 9	01-Aug-22 12:00:00 AM	240689.75 kWh(I) Tot	36600.7 kVArh(Lg)-Wh(I)	165.75 kVArh(Ld)-Wh(I)	240691.5 kVAh-Wh(I)	
History - 10	01-Jul-22 12:00:00 AM	230134.05 kWh(I) Tot	34578.05 kVArh(Lg)-Wh(I)	164.45 kVArh(Ld)-Wh(I)	230141.2 kVAh-Wh(I)	
History - 11	01-Jun-22 12:00:00 AM	220062.3 kWh(I) Tot	32688.65 kVArh(Lg)-Wh(I)	163.7 kVArh(Ld)-Wh(I)	220063.65 kVAh-Wh(I)	
History - 12	01-May-22 12:00:00 AM	209390.3 kWh(I) Tot	30585.1 kVArh(Lg)-Wh(I)	162.45 kVArh(Ld)-Wh(I)	209399.05 kVAh-Wh(	

Main energy registers

History	Billing Dates	Active(I) Total	Reactive(I)-Active(I)	Reactive(E)-Active(I)	Apparent-Active(I) - type 2	2984632
History - 0	----	362234.65 kWh(I) Tot	95236.75 kVArh(Lg)-Wh(I)	0 kVArh(Ld)-Wh(I)	376530.9 kVAh-Wh(I)	
History - 1	01-Apr-23 12:00:00 AM	360336.4 kWh(I) Tot	94694.25 kVArh(Lg)-Wh(I)	0 kVArh(Ld)-Wh(I)	374545.9 kVAh-Wh(I)	
History - 2	01-Mar-23 12:00:00 AM	346969 kWh(I) Tot	91113.45 kVArh(Lg)-Wh(I)	0 kVArh(Ld)-Wh(I)	360648.65 kVAh-Wh(I)	
History - 3	01-Feb-23 12:00:00 AM	337430.25 kWh(I) Tot	88688.7 kVArh(Lg)-Wh(I)	0 kVArh(Ld)-Wh(I)	350756.9 kVAh-Wh(I)	
History - 4	01-Jan-23 12:00:00 AM	327756.3 kWh(I) Tot	86323.7 kVArh(Lg)-Wh(I)	0 kVArh(Ld)-Wh(I)	340704.7 kVAh-Wh(I)	
History - 5	01-Dec-22 12:00:00 AM	317028.3 kWh(I) Tot	83294.7 kVArh(Lg)-Wh(I)	0 kVArh(Ld)-Wh(I)	329437.3 kVAh-Wh(I)	
History - 6	01-Nov-22 12:00:00 AM	304162.4 kWh(I) Tot	79131.2 kVArh(Lg)-Wh(I)	0 kVArh(Ld)-Wh(I)	315807.8 kVAh-Wh(I)	
History - 7	01-Oct-22 12:00:00 AM	289827.05 kWh(I) Tot	74900.25 kVArh(Lg)-Wh(I)	0 kVArh(Ld)-Wh(I)	300794 kVAh-Wh(I)	
History - 8	01-Sep-22 12:00:00 AM	275829.45 kWh(I) Tot	71204.15 kVArh(Lg)-Wh(I)	0 kVArh(Ld)-Wh(I)	286270.2 kVAh-Wh(I)	
History - 9	01-Aug-22 12:00:00 AM	260743.85 kWh(I) Tot	66627.55 kVArh(Lg)-Wh(I)	0 kVArh(Ld)-Wh(I)	270431.9 kVAh-Wh(I)	
History - 10	01-Jul-22 12:00:00 AM	245161.35 kWh(I) Tot	61492.5 kVArh(Lg)-Wh(I)	0 kVArh(Ld)-Wh(I)	253957.6 kVAh-Wh(I)	
History - 11	01-Jun-22 12:00:00 AM	229066.6 kWh(I) Tot	56444.65 kVArh(Lg)-Wh(I)	0 kVArh(Ld)-Wh(I)	237035.05 kVAh-Wh(I)	
History - 12	01-May-22 12:00:00 AM	216050.5 kWh(I) Tot	53094.5 kVArh(Lg)-Wh(I)	0 kVArh(Ld)-Wh(I)	223562.7 kVAh-Wh(I)	

Main energy registers

History	Billing Dates	Active(I) Total	Reactive(I)-Active(I)	Reactive(E)-Active(I)	Apparent-Active(I) - type 2	2984639
History - 0	----	262596.1 kWh(I) Tot	68444.05 kVArh(Lg)-Wh(I)	1742.5 kVArh(Ld)-Wh(I)	273859.75 kVAh-Wh(I)	
History - 1	01-Apr-23 12:00:00 AM	261124.85 kWh(I) Tot	68094.85 kVArh(Lg)-Wh(I)	1710.9 kVArh(Ld)-Wh(I)	272327.95 kVAh-Wh(	
History - 2	01-Mar-23 12:00:00 AM	250752.4 kWh(I) Tot	66074.25 kVArh(Lg)-Wh(I)	1412.65 kVArh(Ld)-Wh(I)	261628.25 kVAh-Wh(I)	
History - 3	01-Feb-23 12:00:00 AM	242037.85 kWh(I) Tot	64030.7 kVArh(Lg)-Wh(I)	1218.4 kVArh(Ld)-Wh(I)	252561.45 kVAh-Wh(I)	
History - 4	01-Jan-23 12:00:00 AM	232205.25 kWh(I) Tot	61669.95 kVArh(Lg)-Wh(I)	965.5 kVArh(Ld)-Wh(I)	242302.1 kVAh-Wh(I)	
History - 5	01-Dec-22 12:00:00 AM	223957.25 kWh(I) Tot	59276.45 kVArh(Lg)-Wh(I)	956.55 kVArh(Ld)-Wh(I)	233653.25 kVAh-Wh(	
History - 6	01-Nov-22 12:00:00 AM	214178.85 kWh(I) Tot	56772.15 kVArh(Lg)-Wh(I)	956.25 kVArh(Ld)-Wh(I)	223516.35 kVAh-Wh(I)	
History - 7	01-Oct-22 12:00:00 AM	204369.6 kWh(I) Tot	54640.95 kVArh(Lg)-Wh(I)	955.9 kVArh(Ld)-Wh(I)	213438.65 kVAh-Wh(I)	
History - 8	01-Sep-22 12:00:00 AM	193899.7 kWh(I) Tot	52973.25 kVArh(Lg)-Wh(I)	492.45 kVArh(Ld)-Wh(I)	202702.75 kVAh-Wh(I)	
History - 9	01-Aug-22 12:00:00 AM	181205.85 kWh(I) Tot	50594.8 kVArh(Lg)-Wh(I)	361.65 kVArh(Ld)-Wh(I)	189712.75 kVAh-Wh(I)	
History - 10	01-Jul-22 12:00:00 AM	168112.45 kWh(I) Tot	48136.55 kVArh(Lg)-Wh(I)	360.35 kVArh(Ld)-Wh(I)	176349 kVAh-Wh(I)	
History - 11	01-Jun-22 12:00:00 AM	154404 kWh(I) Tot	45395.8 kVArh(Lg)-Wh(I)	340.75 kVArh(Ld)-Wh(I)	162331.35 kVAh-Wh(I)	
History - 12	01-May-22 12:00:00 AM	140244.4 kWh(I) Tot	42670.1 kVArh(Lg)-Wh(I)	292.35 kVArh(Ld)-Wh(I)	147866.9 kVAh-Wh(I)	

Main energy registers

History	Billing Dates	Active(I) Total	Reactive(I)-Active(I)	Reactive(E)-Active(I)	Apparent-Active(I) - type 2	2984643
History - 0	----	89328.5 kWh(I) Tot	22142.75 kVArh(Lg)-Wh(I)	163.3 kVArh(Ld)-Wh(I)	92622.3 kVAh-Wh(I)	
History - 1	01-Apr-23 12:00:00 AM	89245.6 kWh(I) Tot	22123.8 kVArh(Lg)-Wh(I)	163.3 kVArh(Ld)-Wh(I)	92537.1 kVAh-Wh(I)	
History - 2	01-Mar-23 12:00:00 AM	85204 kWh(I) Tot	21289.45 kVArh(Lg)-Wh(I)	160.2 kVArh(Ld)-Wh(I)	88395.95 kVAh-Wh(I)	
History - 3	01-Feb-23 12:00:00 AM	81999.3 kWh(I) Tot	20690.65 kVArh(Lg)-Wh(I)	111 kVArh(Ld)-Wh(I)	85109.85 kVAh-Wh(I)	
History - 4	01-Jan-23 12:00:00 AM	78870.95 kWh(I) Tot	20033.3 kVArh(Lg)-Wh(I)	59.8 kVArh(Ld)-Wh(I)	81863.65 kVAh-Wh(I)	
History - 5	01-Dec-22 12:00:00 AM	75885.1 kWh(I) Tot	19123.5 kVArh(Lg)-Wh(I)	25.7 kVArh(Ld)-Wh(I)	78680.05 kVAh-Wh(I)	
History - 6	01-Nov-22 12:00:00 AM	73081.35 kWh(I) Tot	18220.55 kVArh(Lg)-Wh(I)	25.6 kVArh(Ld)-Wh(I)	75705 kVAh-Wh(I)	
History - 7	01-Oct-22 12:00:00 AM	69857.45 kWh(I) Tot	17353.85 kVArh(Lg)-Wh(I)	25.55 kVArh(Ld)-Wh(I)	72345.45 kVAh-Wh(I)	
History - 8	01-Sep-22 12:00:00 AM	66369.95 kWh(I) Tot	16532.3 kVArh(Lg)-Wh(I)	16.55 kVArh(Ld)-Wh(I)	68741.7 kVAh-Wh(I)	
History - 9	01-Aug-22 12:00:00 AM	62670.9 kWh(I) Tot	15686.4 kVArh(Lg)-Wh(I)	12.95 kVArh(Ld)-Wh(I)	64928.1 kVAh-Wh(I)	
History - 10	01-Jul-22 12:00:00 AM	58626.15 kWh(I) Tot	14689.45 kVArh(Lg)-Wh(I)	11.25 kVArh(Ld)-Wh(I)	60742.4 kVAh-Wh(I)	
History - 11	01-Jun-22 12:00:00 AM	54531.25 kWh(I) Tot	13784.8 kVArh(Lg)-Wh(I)	9.65 kVArh(Ld)-Wh(I)	56533.5 kVAh-Wh(I)	
History - 12	01-May-22 12:00:00 AM	50182.85 kWh(I) Tot	12810.8 kVArh(Lg)-Wh(I)	9.6 kVArh(Ld)-Wh(I)	52066.05 kVAh-Wh(I)	

Main energy registers

History	Billing Dates	Active(I) Total	Reactive(I)-Active(I)	Reactive(E)-Active(I)	Apparent-Active(I) - type 2	2984649
History - 0	----	347959.5 kWh(I) Tot	53089.5 kVArh(Lg)-Wh(I)	0 kVArh(Ld)-Wh(I)	352344.15 kVAh-Wh(I)	
History - 1	01-Apr-23 12:00:00 AM	346495.2 kWh(I) Tot	52861.2 kVArh(Lg)-Wh(I)	0 kVArh(Ld)-Wh(I)	350860.9 kVAh-Wh(I)	
History - 2	01-Mar-23 12:00:00 AM	332236.7 kWh(I) Tot	50740 kVArh(Lg)-Wh(I)	0 kVArh(Ld)-Wh(I)	336431.55 kVAh-Wh(I)	
History - 3	01-Feb-23 12:00:00 AM	320439.6 kWh(I) Tot	48992.7 kVArh(Lg)-Wh(I)	0 kVArh(Ld)-Wh(I)	324490.1 kVAh-Wh(I)	
History - 4	01-Jan-23 12:00:00 AM	307629.3 kWh(I) Tot	47117 kVArh(Lg)-Wh(I)	0 kVArh(Ld)-Wh(I)	311522.65 kVAh-Wh(I)	
History - 5	01-Dec-22 12:00:00 AM	294708.25 kWh(I) Tot	45229.2 kVArh(Lg)-Wh(I)	0 kVArh(Ld)-Wh(I)	298445.1 kVAh-Wh(I)	
History - 6	01-Nov-22 12:00:00 AM	281176.1 kWh(I) Tot	43324.75 kVArh(Lg)-Wh(I)	0 kVArh(Ld)-Wh(I)	284763.75 kVAh-Wh(I)	
History - 7	01-Oct-22 12:00:00 AM	265905.05 kWh(I) Tot	41065.25 kVArh(Lg)-Wh(I)	0 kVArh(Ld)-Wh(I)	269312.75 kVAh-Wh(I)	
History - 8	01-Sep-22 12:00:00 AM	249844.6 kWh(I) Tot	38584.05 kVArh(Lg)-Wh(I)	0 kVArh(Ld)-Wh(I)	253048.5 kVAh-Wh(I)	
History - 9	01-Aug-22 12:00:00 AM	233656.5 kWh(I) Tot	36130.5 kVArh(Lg)-Wh(I)	0 kVArh(Ld)-Wh(I)	236662.2 kVAh-Wh(I)	
History - 10	01-Jul-22 12:00:00 AM	217127.1 kWh(I) Tot	33525.4 kVArh(Lg)-Wh(I)	0 kVArh(Ld)-Wh(I)	219915.15 kVAh-Wh(I)	
History - 11	01-Jun-22 12:00:00 AM	201091.4 kWh(I) Tot	30905.2 kVArh(Lg)-Wh(I)	0 kVArh(Ld)-Wh(I)	203654.2 kVAh-Wh(I)	
History - 12	01-May-22 12:00:00 AM	185039.2 kWh(I) Tot	28240.55 kVArh(Lg)-Wh(I)	0 kVArh(Ld)-Wh(I)	187369.7 kVAh-Wh(I)	

Main energy registers

History	Billing Dates	Active(I) Total	Reactive(I)-Active(I)	Reactive(E)-Active(I)	Apparent-Active(I) - type 2	2984661
History - 0	----	21784.05 kWh(I) Tot	3589.4 kVArh(Lg)-Wh(I)	0.2 kVArh(Ld)-Wh(I)	22142.7 kVAh-Wh(I)	
History - 1	01-Apr-23 12:00:00 AM	21684.4 kWh(I) Tot	3572 kVArh(Lg)-Wh(I)	0.2 kVArh(Ld)-Wh(I)	22041.3 kVAh-Wh(I)	
History - 2	01-Mar-23 12:00:00 AM	21021.05 kWh(I) Tot	3460.9 kVArh(Lg)-Wh(I)	0.2 kVArh(Ld)-Wh(I)	21367.15 kVAh-Wh(I)	
History - 3	01-Feb-23 12:00:00 AM	20368.45 kWh(I) Tot	3343.75 kVArh(Lg)-Wh(I)	0.2 kVArh(Ld)-Wh(I)	20702.05 kVAh-Wh(I)	
History - 4	01-Jan-23 12:00:00 AM	19699.2 kWh(I) Tot	3216.55 kVArh(Lg)-Wh(I)	0.2 kVArh(Ld)-Wh(I)	20017.65 kVAh-Wh(I)	
History - 5	01-Dec-22 12:00:00 AM	19071.25 kWh(I) Tot	3094.3 kVArh(Lg)-Wh(I)	0.2 kVArh(Ld)-Wh(I)	19374.25 kVAh-Wh(I)	
History - 6	01-Nov-22 12:00:00 AM	18416.7 kWh(I) Tot	2977.3 kVArh(Lg)-Wh(I)	0.2 kVArh(Ld)-Wh(I)	18706.7 kVAh-Wh(I)	
History - 7	01-Oct-22 12:00:00 AM	17612.45 kWh(I) Tot	2851.05 kVArh(Lg)-Wh(I)	0.2 kVArh(Ld)-Wh(I)	17891 kVAh-Wh(I)	
History - 8	01-Sep-22 12:00:00 AM	16721.4 kWh(I) Tot	2719.65 kVArh(Lg)-Wh(I)	0.2 kVArh(Ld)-Wh(I)	16989 kVAh-Wh(I)	
History - 9	01-Aug-22 12:00:00 AM	15853.4 kWh(I) Tot	2584.25 kVArh(Lg)-Wh(I)	0.2 kVArh(Ld)-Wh(I)	16109.05 kVAh-Wh(I)	
History - 10	01-Jul-22 12:00:00 AM	14966.4 kWh(I) Tot	2437.55 kVArh(Lg)-Wh(I)	0.2 kVArh(Ld)-Wh(I)	15208.65 kVAh-Wh(I)	
History - 11	01-Jun-22 12:00:00 AM	14073.2 kWh(I) Tot	2279.1 kVArh(Lg)-Wh(I)	0.2 kVArh(Ld)-Wh(I)	14300.2 kVAh-Wh(I)	
History - 12	01-May-22 12:00:00 AM	13175.7 kWh(I) Tot	2121.55 kVArh(Lg)-Wh(I)	0.2 kVArh(Ld)-Wh(I)	13387.7 kVAh-Wh(I)	

Main energy registers

History	Billing Dates	Active(I) Total	Reactive(I)-Active(I)	Reactive(E)-Active(I)	Apparent-Active(I) - type 2	2984664
History - 0	----	450384.7 kWh(I) Tot	82798 kVArh(Lg)-Wh(I)	0 kVArh(Ld)-Wh(I)	459989.6 kVAh-Wh(I)	
History - 1	01-Apr-23 12:00:00 AM	447474.1 kWh(I) Tot	82259.6 kVArh(Lg)-Wh(I)	0 kVArh(Ld)-Wh(I)	457024.2 kVAh-Wh(I)	
History - 2	01-Mar-23 12:00:00 AM	433577.8 kWh(I) Tot	79618.75 kVArh(Lg)-Wh(I)	0 kVArh(Ld)-Wh(I)	442842.7 kVAh-Wh(I)	
History - 3	01-Feb-23 12:00:00 AM	422386.3 kWh(I) Tot	77283.75 kVArh(Lg)-Wh(I)	0 kVArh(Ld)-Wh(I)	431347.9 kVAh-Wh(I)	
History - 4	01-Jan-23 12:00:00 AM	410443.3 kWh(I) Tot	74556.6 kVArh(Lg)-Wh(I)	0 kVArh(Ld)-Wh(I)	418962.05 kVAh-Wh(I)	
History - 5	01-Dec-22 12:00:00 AM	398750.55 kWh(I) Tot	71559.2 kVArh(Lg)-Wh(I)	0 kVArh(Ld)-Wh(I)	406724.15 kVAh-Wh(I)	
History - 6	01-Nov-22 12:00:00 AM	386158 kWh(I) Tot	68572.85 kVArh(Lg)-Wh(I)	0 kVArh(Ld)-Wh(I)	393673.3 kVAh-Wh(I)	
History - 7	01-Oct-22 12:00:00 AM	371499.8 kWh(I) Tot	65560.1 kVArh(Lg)-Wh(I)	0 kVArh(Ld)-Wh(I)	378665.2 kVAh-Wh(I)	
History - 8	01-Sep-22 12:00:00 AM	356399.45 kWh(I) Tot	62792 kVArh(Lg)-Wh(I)	0 kVArh(Ld)-Wh(I)	363286.6 kVAh-Wh(I)	
History - 9	01-Aug-22 12:00:00 AM	340512.85 kWh(I) Tot	59764.65 kVArh(Lg)-Wh(I)	0 kVArh(Ld)-Wh(I)	347079.85 kVAh-Wh(I)	
History - 10	01-Jul-22 12:00:00 AM	324330.4 kWh(I) Tot	56579.55 kVArh(Lg)-Wh(I)	0 kVArh(Ld)-Wh(I)	330557.3 kVAh-Wh(I)	
History - 11	01-Jun-22 12:00:00 AM	308430.05 kWh(I) Tot	53597.15 kVArh(Lg)-Wh(I)	0 kVArh(Ld)-Wh(I)	314355.8 kVAh-Wh(I)	
History - 12	01-May-22 12:00:00 AM	292574.45 kWh(I) Tot	50645.35 kVArh(Lg)-Wh(I)	0 kVArh(Ld)-Wh(I)	298207 kVAh-Wh(I)	

Main energy registers

History	Billing Dates	Active(I) Total	Reactive(I)-Active(I)	Reactive(E)-Active(I)	Apparent-Active(I) - type 2	2984669
History - 0	----	47417.1 kWh(I) Tot	14590.89 kVArh(Lg)-Wh(I)	0 kVArh(Ld)-Wh(I)	49378.15 kVAh-Wh(I)	
History - 1	01-Apr-23 12:00:00 AM	47130.15 kWh(I) Tot	14528.74 kVArh(Lg)-Wh(I)	0 kVArh(Ld)-Wh(I)	49083.7 kVAh-Wh(I)	
History - 2	01-Mar-23 12:00:00 AM	44693.5 kWh(I) Tot	14011.04 kVArh(Lg)-Wh(I)	0 kVArh(Ld)-Wh(I)	46585.6 kVAh-Wh(I)	
History - 3	01-Feb-23 12:00:00 AM	42586.5 kWh(I) Tot	13513.69 kVArh(Lg)-Wh(I)	0 kVArh(Ld)-Wh(I)	44412.95 kVAh-Wh(I)	
History - 4	01-Jan-23 12:00:00 AM	40514 kWh(I) Tot	12949.04 kVArh(Lg)-Wh(I)	0 kVArh(Ld)-Wh(I)	42255.45 kVAh-Wh(I)	
History - 5	01-Dec-22 12:00:00 AM	38537.6 kWh(I) Tot	12449.49 kVArh(Lg)-Wh(I)	0 kVArh(Ld)-Wh(I)	40207.25 kVAh-Wh(I)	
History - 6	01-Nov-22 12:00:00 AM	36426.5 kWh(I) Tot	11926.59 kVArh(Lg)-Wh(I)	0 kVArh(Ld)-Wh(I)	38024.7 kVAh-Wh(I)	
History - 7	01-Oct-22 12:00:00 AM	34030.8 kWh(I) Tot	11391.74 kVArh(Lg)-Wh(I)	0 kVArh(Ld)-Wh(I)	35563.55 kVAh-Wh(I)	
History - 8	01-Sep-22 12:00:00 AM	31406.85 kWh(I) Tot	10790.19 kVArh(Lg)-Wh(I)	0 kVArh(Ld)-Wh(I)	32866.3 kVAh-Wh(I)	
History - 9	01-Aug-22 12:00:00 AM	28773.15 kWh(I) Tot	8497.5 kVArh(Lg)-Wh(I)	0 kVArh(Ld)-Wh(I)	30144.9 kVAh-Wh(I)	
History - 10	01-Jul-22 12:00:00 AM	25975.2 kWh(I) Tot	7811.05 kVArh(Lg)-Wh(I)	0 kVArh(Ld)-Wh(I)	27255.9 kVAh-Wh(I)	
History - 11	01-Jun-22 12:00:00 AM	23129.75 kWh(I) Tot	7066.1 kVArh(Lg)-Wh(I)	0 kVArh(Ld)-Wh(I)	24306.7 kVAh-Wh(I)	
History - 12	01-May-22 12:00:00 AM	20185.7 kWh(I) Tot	6332.2 kVArh(Lg)-Wh(I)	0 kVArh(Ld)-Wh(I)	21263.55 kVAh-Wh(I)	

Main energy registers

History	Billing Dates	Active(I) Total	Reactive(I)-Active(I)	Reactive(E)-Active(I)	Apparent-Active(I) - type 2	2984698
History - 0	----	79179.95 kWh(I) Tot	13753.05 kVArh(Lg)-Wh(I)	0 kVArh(Ld)-Wh(I)	80622.2 kVAh-Wh(I)	
History - 1	01-Apr-23 12:00:00 AM	79100.45 kWh(I) Tot	13740.3 kVArh(Lg)-Wh(I)	0 kVArh(Ld)-Wh(I)	80541.5 kVAh-Wh(I)	
History - 2	01-Mar-23 12:00:00 AM	75841.8 kWh(I) Tot	13238.8 kVArh(Lg)-Wh(I)	0 kVArh(Ld)-Wh(I)	77235.9 kVAh-Wh(I)	
History - 3	01-Feb-23 12:00:00 AM	73514.25 kWh(I) Tot	12896.8 kVArh(Lg)-Wh(I)	0 kVArh(Ld)-Wh(I)	74874.5 kVAh-Wh(I)	
History - 4	01-Jan-23 12:00:00 AM	71114.75 kWh(I) Tot	12510.4 kVArh(Lg)-Wh(I)	0 kVArh(Ld)-Wh(I)	72433.25 kVAh-Wh(I)	
History - 5	01-Dec-22 12:00:00 AM	68606.6 kWh(I) Tot	12114.95 kVArh(Lg)-Wh(I)	0 kVArh(Ld)-Wh(I)	69883.6 kVAh-Wh(I)	
History - 6	01-Nov-22 12:00:00 AM	66127.15 kWh(I) Tot	11713.6 kVArh(Lg)-Wh(I)	0 kVArh(Ld)-Wh(I)	67363.1 kVAh-Wh(I)	
History - 7	01-Oct-22 12:00:00 AM	65391.3 kWh(I) Tot	11549.3 kVArh(Lg)-Wh(I)	0 kVArh(Ld)-Wh(I)	66605.15 kVAh-Wh(I)	
History - 8	01-Sep-22 12:00:00 AM	64638.1 kWh(I) Tot	11377.5 kVArh(Lg)-Wh(I)	0 kVArh(Ld)-Wh(I)	65828.8 kVAh-Wh(I)	
History - 9	01-Aug-22 12:00:00 AM	63830.9 kWh(I) Tot	11199.15 kVArh(Lg)-Wh(I)	0 kVArh(Ld)-Wh(I)	64997.95 kVAh-Wh(I)	
History - 10	01-Jul-22 12:00:00 AM	62976.4 kWh(I) Tot	11018.25 kVArh(Lg)-Wh(I)	0 kVArh(Ld)-Wh(I)	64120.45 kVAh-Wh(I)	
History - 11	01-Jun-22 12:00:00 AM	58278.7 kWh(I) Tot	10191.8 kVArh(Lg)-Wh(I)	0 kVArh(Ld)-Wh(I)	59344.25 kVAh-Wh(I)	
History - 12	01-May-22 12:00:00 AM	53267.45 kWh(I) Tot	9288.2 kVArh(Lg)-Wh(I)	0 kVArh(Ld)-Wh(I)	54245.2 kVAh-Wh(I)	

Main energy registers

History	Billing Dates	Active(I) Total	Reactive(I)-Active(I)	Reactive(E)-Active(I)	Apparent-Active(I) - type 2	2984713
History - 0	----	227843.15 kWh(I) Tot	84484.6 kVArh(Lg)-Wh(I)	78.15 kVArh(Ld)-Wh(I)	246805.05 kVAh-Wh(I)	
History - 1	01-Apr-23 12:00:00 AM	227612.35 kWh(I) Tot	84417.9 kVArh(Lg)-Wh(I)	78.15 kVArh(Ld)-Wh(I)	246564.2 kVAh-Wh(I)	
History - 2	01-Mar-23 12:00:00 AM	217678.35 kWh(I) Tot	82663.85 kVArh(Lg)-Wh(I)	52.8 kVArh(Ld)-Wh(I)	236413.6 kVAh-Wh(I)	
History - 3	01-Feb-23 12:00:00 AM	209858.45 kWh(I) Tot	81179.25 kVArh(Lg)-Wh(I)	36.25 kVArh(Ld)-Wh(I)	228406.35 kVAh-Wh(I)	
History - 4	01-Jan-23 12:00:00 AM	201879.45 kWh(I) Tot	79438.85 kVArh(Lg)-Wh(I)	19.55 kVArh(Ld)-Wh(I)	220172.6 kVAh-Wh(I)	
History - 5	01-Dec-22 12:00:00 AM	194094.85 kWh(I) Tot	77366.6 kVArh(Lg)-Wh(I)	9.1 kVArh(Ld)-Wh(I)	212034.95 kVAh-Wh(I)	
History - 6	01-Nov-22 12:00:00 AM	185489.5 kWh(I) Tot	75165.75 kVArh(Lg)-Wh(I)	5.55 kVArh(Ld)-Wh(I)	203092.15 kVAh-Wh(I)	
History - 7	01-Oct-22 12:00:00 AM	176588.85 kWh(I) Tot	73323.35 kVArh(Lg)-Wh(I)	4.15 kVArh(Ld)-Wh(I)	193967.05 kVAh-Wh(I)	
History - 8	01-Sep-22 12:00:00 AM	166482.1 kWh(I) Tot	71077.45 kVArh(Lg)-Wh(I)	3.4 kVArh(Ld)-Wh(I)	183572.95 kVAh-Wh(I)	
History - 9	01-Aug-22 12:00:00 AM	156260.45 kWh(I) Tot	68761.55 kVArh(Lg)-Wh(I)	1.75 kVArh(Ld)-Wh(I)	173043.65 kVAh-Wh(I)	
History - 10	01-Jul-22 12:00:00 AM	145232.75 kWh(I) Tot	66164.35 kVArh(Lg)-Wh(I)	0.9 kVArh(Ld)-Wh(I)	161661.5 kVAh-Wh(I)	
History - 11	01-Jun-22 12:00:00 AM	134884.85 kWh(I) Tot	63174.35 kVArh(Lg)-Wh(I)	0.15 kVArh(Ld)-Wh(I)	150799.3 kVAh-Wh(I)	
History - 12	01-May-22 12:00:00 AM	124276.25 kWh(I) Tot	58268.2 kVArh(Lg)-Wh(I)	0.15 kVArh(Ld)-Wh(I)	139029.75 kVAh-Wh(I)	

Main energy registers

History	Billing Dates	Active(I) Total	Reactive(I)-Active(I)	Reactive(E)-Active(I)	Apparent-Active(I) - type 2	2984734
History - 0	----	318680.55 kWh(I) Tot	79143.05 kVArh(Lg)-Wh(I)	0 kVArh(Ld)-Wh(I)	329121.75 kVAh-Wh(I)	
History - 1	01-Apr-23 12:00:00 AM	316114.7 kWh(I) Tot	78470.1 kVArh(Lg)-Wh(I)	0 kVArh(Ld)-Wh(I)	326465.05 kVAh-Wh(I)	
History - 2	01-Mar-23 12:00:00 AM	305580 kWh(I) Tot	75770.4 kVArh(Lg)-Wh(I)	0 kVArh(Ld)-Wh(I)	315567.7 kVAh-Wh(I)	
History - 3	01-Feb-23 12:00:00 AM	297224.15 kWh(I) Tot	73487.75 kVArh(Lg)-Wh(I)	0 kVArh(Ld)-Wh(I)	306878.4 kVAh-Wh(I)	
History - 4	01-Jan-23 12:00:00 AM	288590.7 kWh(I) Tot	71127.05 kVArh(Lg)-Wh(I)	0 kVArh(Ld)-Wh(I)	297883.6 kVAh-Wh(I)	
History - 5	01-Dec-22 12:00:00 AM	280036.4 kWh(I) Tot	68975.45 kVArh(Lg)-Wh(I)	0 kVArh(Ld)-Wh(I)	289023.7 kVAh-Wh(I)	
History - 6	01-Nov-22 12:00:00 AM	270969.45 kWh(I) Tot	66656.35 kVArh(Lg)-Wh(I)	0 kVArh(Ld)-Wh(I)	279638 kVAh-Wh(I)	
History - 7	01-Oct-22 12:00:00 AM	260713.35 kWh(I) Tot	64227.9 kVArh(Lg)-Wh(I)	0 kVArh(Ld)-Wh(I)	269080.6 kVAh-Wh(I)	
History - 8	01-Sep-22 12:00:00 AM	250016.65 kWh(I) Tot	61659.05 kVArh(Lg)-Wh(I)	0 kVArh(Ld)-Wh(I)	258065.1 kVAh-Wh(I)	
History - 9	01-Aug-22 12:00:00 AM	239344.75 kWh(I) Tot	59098.5 kVArh(Lg)-Wh(I)	0 kVArh(Ld)-Wh(I)	247074.55 kVAh-Wh(I)	
History - 10	01-Jul-22 12:00:00 AM	228740.75 kWh(I) Tot	56596 kVArh(Lg)-Wh(I)	0 kVArh(Ld)-Wh(I)	236165.25 kVAh-Wh(I)	
History - 11	01-Jun-22 12:00:00 AM	218036.45 kWh(I) Tot	54019.15 kVArh(Lg)-Wh(I)	0 kVArh(Ld)-Wh(I)	225141.25 kVAh-Wh(I)	
History - 12	01-May-22 12:00:00 AM	207541.05 kWh(I) Tot	51459.75 kVArh(Lg)-Wh(I)	0 kVArh(Ld)-Wh(I)	214325.5 kVAh-Wh(I)	

Main energy registers

History	Billing Dates	Active(I) Total	Reactive(I)-Active(I)	Reactive(E)-Active(I)	Apparent-Active(I) - type 2	2984747
History - 0	----	26415.35 kWh(I) Tot	7110.35 kVArh(Lg)-Wh(I)	0.45 kVArh(Ld)-Wh(I)	27535.65 kVAh-Wh(I)	
History - 1	01-Apr-23 12:00:00 AM	26238.2 kWh(I) Tot	7074.1 kVArh(Lg)-Wh(I)	0.45 kVArh(Ld)-Wh(I)	27354.25 kVAh-Wh(I)	
History - 2	01-Mar-23 12:00:00 AM	25091.85 kWh(I) Tot	6789.9 kVArh(Lg)-Wh(I)	0.45 kVArh(Ld)-Wh(I)	26168.95 kVAh-Wh(I)	
History - 3	01-Feb-23 12:00:00 AM	24076.25 kWh(I) Tot	6537.65 kVArh(Lg)-Wh(I)	0.45 kVArh(Ld)-Wh(I)	25116.75 kVAh-Wh(I)	
History - 4	01-Jan-23 12:00:00 AM	23061.1 kWh(I) Tot	6323.5 kVArh(Lg)-Wh(I)	0.45 kVArh(Ld)-Wh(I)	24073 kVAh-Wh(I)	
History - 5	01-Dec-22 12:00:00 AM	22531.05 kWh(I) Tot	6203.5 kVArh(Lg)-Wh(I)	0.3 kVArh(Ld)-Wh(I)	23521.75 kVAh-Wh(I)	
History - 6	01-Nov-22 12:00:00 AM	21743.6 kWh(I) Tot	6026.75 kVArh(Lg)-Wh(I)	0.3 kVArh(Ld)-Wh(I)	22708.9 kVAh-Wh(I)	
History - 7	01-Oct-22 12:00:00 AM	20856.1 kWh(I) Tot	5791.8 kVArh(Lg)-Wh(I)	0.3 kVArh(Ld)-Wh(I)	21787 kVAh-Wh(I)	
History - 8	01-Sep-22 12:00:00 AM	19773.05 kWh(I) Tot	5458.9 kVArh(Lg)-Wh(I)	0.3 kVArh(Ld)-Wh(I)	20650.7 kVAh-Wh(I)	
History - 9	01-Aug-22 12:00:00 AM	18751.8 kWh(I) Tot	5213.8 kVArh(Lg)-Wh(I)	0.3 kVArh(Ld)-Wh(I)	19597.35 kVAh-Wh(I)	
History - 10	01-Jul-22 12:00:00 AM	17976.5 kWh(I) Tot	5066.65 kVArh(Lg)-Wh(I)	0.3 kVArh(Ld)-Wh(I)	18805.5 kVAh-Wh(I)	
History - 11	01-Jun-22 12:00:00 AM	17016.6 kWh(I) Tot	4833.25 kVArh(Lg)-Wh(I)	0.3 kVArh(Ld)-Wh(I)	17815.35 kVAh-Wh(I)	
History - 12	01-May-22 12:00:00 AM	16188.9 kWh(I) Tot	4639.95 kVArh(Lg)-Wh(I)	0.3 kVArh(Ld)-Wh(I)	16963.45 kVAh-Wh(I)	

Main energy registers

History	Billing Dates	Active(I) Total	Reactive(I)-Active(I)	Reactive(E)-Active(I)	Apparent-Active(I) - type 2	2984755
History - 0	----	364027.95 kWh(I) Tot	95257.1 kVArh(Lg)-Wh(I)	0 kVArh(Ld)-Wh(I)	377591.75 kVAh-Wh(I)	
History - 1	01-Apr-23 12:00:00 AM	362491.45 kWh(I) Tot	94797.45 kVArh(Lg)-Wh(I)	0 kVArh(Ld)-Wh(I)	375984.35 kVAh-Wh(I)	
History - 2	01-Mar-23 12:00:00 AM	356163.5 kWh(I) Tot	92863.1 kVArh(Lg)-Wh(I)	0 kVArh(Ld)-Wh(I)	369344 kVAh-Wh(I)	
History - 3	01-Feb-23 12:00:00 AM	354789.45 kWh(I) Tot	92403.9 kVArh(Lg)-Wh(I)	0 kVArh(Ld)-Wh(I)	367890.25 kVAh-Wh(I)	
History - 4	01-Dec-22 12:00:00 AM	354789.45 kWh(I) Tot	92403.9 kVArh(Lg)-Wh(I)	0 kVArh(Ld)-Wh(I)	367890.25 kVAh-Wh(I)	
History - 5	01-Nov-22 12:00:00 AM	354752.6 kWh(I) Tot	92392.05 kVArh(Lg)-Wh(I)	0 kVArh(Ld)-Wh(I)	367851.5 kVAh-Wh(I)	
History - 6	01-Oct-22 12:00:00 AM	341786.4 kWh(I) Tot	88666.9 kVArh(Lg)-Wh(I)	0 kVArh(Ld)-Wh(I)	354323.7 kVAh-Wh(I)	
History - 7	01-Sep-22 12:00:00 AM	327914.2 kWh(I) Tot	84842.5 kVArh(Lg)-Wh(I)	0 kVArh(Ld)-Wh(I)	339904.9 kVAh-Wh(I)	
History - 8	01-Aug-22 12:00:00 AM	314979.1 kWh(I) Tot	81531.5 kVArh(Lg)-Wh(I)	0 kVArh(Ld)-Wh(I)	326527.35 kVAh-Wh(I)	
History - 9	01-Jul-22 12:00:00 AM	301767.2 kWh(I) Tot	78446.05 kVArh(Lg)-Wh(I)	0 kVArh(Ld)-Wh(I)	312935.9 kVAh-Wh(I)	
History - 10	01-Jun-22 12:00:00 AM	287772.65 kWh(I) Tot	75227.65 kVArh(Lg)-Wh(I)	0 kVArh(Ld)-Wh(I)	298553.6 kVAh-Wh(I)	
History - 11	01-May-22 12:00:00 AM	275232.15 kWh(I) Tot	72159.3 kVArh(Lg)-Wh(I)	0 kVArh(Ld)-Wh(I)	285624 kVAh-Wh(I)	
History - 12	01-Apr-22 12:00:00 AM	262455.8 kWh(I) Tot	69071.8 kVArh(Lg)-Wh(I)	0 kVArh(Ld)-Wh(I)	272457.7 kVAh-Wh(I)	

Main energy registers

History	Billing Dates	Active(I) Total	Reactive(I)-Active(I)	Reactive(E)-Active(I)	Apparent-Active(I) - type 2	2984760
History - 0	----	670716.15 kWh(I) Tot	117322.65 kVArh(Lg)-Wh(I)	0 kVArh(Ld)-Wh(I)	682183.7 kVAh-Wh(I)	
History - 1	01-Apr-23 12:00:00 AM	667892 kWh(I) Tot	116771.25 kVArh(Lg)-Wh(I)	0 kVArh(Ld)-Wh(I)	679302.25 kVAh-Wh(I)	
History - 2	01-Mar-23 12:00:00 AM	653522.85 kWh(I) Tot	113943.3 kVArh(Lg)-Wh(I)	0 kVArh(Ld)-Wh(I)	664633.45 kVAh-Wh(I)	
History - 3	01-Feb-23 12:00:00 AM	641908.05 kWh(I) Tot	111488.6 kVArh(Lg)-Wh(I)	0 kVArh(Ld)-Wh(I)	652733.15 kVAh-Wh(I)	
History - 4	01-Jan-23 12:00:00 AM	629752.1 kWh(I) Tot	109020.55 kVArh(Lg)-Wh(I)	0 kVArh(Ld)-Wh(I)	640290.5 kVAh-Wh(I)	
History - 5	01-Dec-22 12:00:00 AM	617529.6 kWh(I) Tot	106405.6 kVArh(Lg)-Wh(I)	0 kVArh(Ld)-Wh(I)	627746.1 kVAh-Wh(I)	
History - 6	01-Nov-22 12:00:00 AM	604741.55 kWh(I) Tot	103663.95 kVArh(Lg)-Wh(I)	0 kVArh(Ld)-Wh(I)	614633.45 kVAh-Wh(I)	
History - 7	01-Oct-22 12:00:00 AM	589408.4 kWh(I) Tot	100704.2 kVArh(Lg)-Wh(I)	0 kVArh(Ld)-Wh(I)	598994.95 kVAh-Wh(I)	
History - 8	01-Sep-22 12:00:00 AM	572364.55 kWh(I) Tot	97567.25 kVArh(Lg)-Wh(I)	0 kVArh(Ld)-Wh(I)	581646.4 kVAh-Wh(I)	
History - 9	01-Aug-22 12:00:00 AM	554773.6 kWh(I) Tot	94209.1 kVArh(Lg)-Wh(I)	0 kVArh(Ld)-Wh(I)	563715.7 kVAh-Wh(I)	
History - 10	01-Jul-22 12:00:00 AM	536143.05 kWh(I) Tot	90478.9 kVArh(Lg)-Wh(I)	0 kVArh(Ld)-Wh(I)	544693.7 kVAh-Wh(I)	
History - 11	01-Jun-22 12:00:00 AM	517780.25 kWh(I) Tot	86789.7 kVArh(Lg)-Wh(I)	0 kVArh(Ld)-Wh(I)	525945.05 kVAh-Wh(I)	
History - 12	01-May-22 12:00:00 AM	498355.3 kWh(I) Tot	82917.3 kVArh(Lg)-Wh(I)	0 kVArh(Ld)-Wh(I)	506119.15 kVAh-Wh(I)	

Main energy registers

History	Billing Dates	Active(I) Total	Reactive(I)-Active(I)	Reactive(E)-Active(I)	Apparent-Active(I) - type 2	2984768
History - 0	----	140929.25 kWh(I) Tot	28679.2 kVArh(Lg)-Wh(I)	0.05 kVArh(Ld)-Wh(I)	144184.95 kVAh-Wh(I)	
History - 1	01-Apr-23 12:00:00 AM	140187.9 kWh(I) Tot	28521.25 kVArh(Lg)-Wh(I)	0.05 kVArh(Ld)-Wh(I)	143425.75 kVAh-Wh(I)	
History - 2	01-Mar-23 12:00:00 AM	135234.45 kWh(I) Tot	27551.45 kVArh(Lg)-Wh(I)	0.05 kVArh(Ld)-Wh(I)	138370 kVAh-Wh(I)	
History - 3	01-Feb-23 12:00:00 AM	131500.55 kWh(I) Tot	26759.65 kVArh(Lg)-Wh(I)	0.05 kVArh(Ld)-Wh(I)	134543.15 kVAh-Wh(I)	
History - 4	01-Jan-23 12:00:00 AM	127644.5 kWh(I) Tot	25923.35 kVArh(Lg)-Wh(I)	0.05 kVArh(Ld)-Wh(I)	130576.7 kVAh-Wh(I)	
History - 5	01-Dec-22 12:00:00 AM	124086.25 kWh(I) Tot	25231.8 kVArh(Lg)-Wh(I)	0.05 kVArh(Ld)-Wh(I)	126933.55 kVAh-Wh(I)	
History - 6	01-Nov-22 12:00:00 AM	119997.4 kWh(I) Tot	24383.4 kVArh(Lg)-Wh(I)	0.05 kVArh(Ld)-Wh(I)	122742.45 kVAh-Wh(I)	
History - 7	01-Oct-22 12:00:00 AM	115012.9 kWh(I) Tot	23330 kVArh(Lg)-Wh(I)	0.05 kVArh(Ld)-Wh(I)	117635.7 kVAh-Wh(I)	
History - 8	01-Sep-22 12:00:00 AM	109986.9 kWh(I) Tot	22348 kVArh(Lg)-Wh(I)	0.05 kVArh(Ld)-Wh(I)	112506.3 kVAh-Wh(I)	
History - 9	01-Aug-22 12:00:00 AM	105095.95 kWh(I) Tot	21487.45 kVArh(Lg)-Wh(I)	0.05 kVArh(Ld)-Wh(I)	107533.8 kVAh-Wh(I)	
History - 10	01-Jul-22 12:00:00 AM	100165.6 kWh(I) Tot	20612.95 kVArh(Lg)-Wh(I)	0 kVArh(Ld)-Wh(I)	102520.3 kVAh-Wh(I)	
History - 11	01-Jun-22 12:00:00 AM	94919.6 kWh(I) Tot	19592.6 kVArh(Lg)-Wh(I)	0 kVArh(Ld)-Wh(I)	97170.05 kVAh-Wh(I)	
History - 12	01-May-22 12:00:00 AM	89987.8 kWh(I) Tot	18566.1 kVArh(Lg)-Wh(I)	0 kVArh(Ld)-Wh(I)	92126.9 kVAh-Wh(I)	

Main energy registers

History	Billing Dates	Active(I) Total	Reactive(I)-Active(I)	Reactive(E)-Active(I)	Apparent-Active(I) - type 2	2984811
History - 0	----	171416.95 kWh(I) Tot	26573.15 kVArh(Lg)-Wh(I)	0 kVArh(Ld)-Wh(I)	173940.7 kVAh-Wh(I)	
History - 1	01-Apr-23 12:00:00 AM	171352.9 kWh(I) Tot	26558.7 kVArh(Lg)-Wh(I)	0 kVArh(Ld)-Wh(I)	173874.9 kVAh-Wh(I)	
History - 2	01-Mar-23 12:00:00 AM	165940.65 kWh(I) Tot	25734.9 kVArh(Lg)-Wh(I)	0 kVArh(Ld)-Wh(I)	168387.55 kVAh-Wh(I)	
History - 3	01-Feb-23 12:00:00 AM	161540.85 kWh(I) Tot	24935.95 kVArh(Lg)-Wh(I)	0 kVArh(Ld)-Wh(I)	163897.15 kVAh-Wh(I)	
History - 4	01-Jan-23 12:00:00 AM	156968.1 kWh(I) Tot	23924.25 kVArh(Lg)-Wh(I)	0 kVArh(Ld)-Wh(I)	159185 kVAh-Wh(I)	
History - 5	01-Dec-22 12:00:00 AM	152286.9 kWh(I) Tot	22950.05 kVArh(Lg)-Wh(I)	0 kVArh(Ld)-Wh(I)	154375 kVAh-Wh(I)	
History - 6	01-Nov-22 12:00:00 AM	147381.55 kWh(I) Tot	22193.6 kVArh(Lg)-Wh(I)	0 kVArh(Ld)-Wh(I)	149396.45 kVAh-Wh(I)	
History - 7	01-Oct-22 12:00:00 AM	141257.25 kWh(I) Tot	21361.1 kVArh(Lg)-Wh(I)	0 kVArh(Ld)-Wh(I)	143206.5 kVAh-Wh(I)	
History - 8	01-Sep-22 12:00:00 AM	134568.7 kWh(I) Tot	20427.1 kVArh(Lg)-Wh(I)	0 kVArh(Ld)-Wh(I)	136443.95 kVAh-Wh(I)	
History - 9	01-Aug-22 12:00:00 AM	128187.45 kWh(I) Tot	19535.6 kVArh(Lg)-Wh(I)	0 kVArh(Ld)-Wh(I)	129992.45 kVAh-Wh(I)	
History - 10	01-Jul-22 12:00:00 AM	121118 kWh(I) Tot	18553.9 kVArh(Lg)-Wh(I)	0 kVArh(Ld)-Wh(I)	122845.9 kVAh-Wh(I)	
History - 11	01-Jun-22 12:00:00 AM	114226.45 kWh(I) Tot	17554.45 kVArh(Lg)-Wh(I)	0 kVArh(Ld)-Wh(I)	115873.5 kVAh-Wh(I)	
History - 12	01-May-22 12:00:00 AM	107152.5 kWh(I) Tot	16510.05 kVArh(Lg)-Wh(I)	0 kVArh(Ld)-Wh(I)	108713.7 kVAh-Wh(I)	

Main energy registers

History	Billing Dates	Active(I) Total	Reactive(I)-Active(I)	Reactive(E)-Active(I)	Apparent-Active(I) - type 2	2984813
History - 0	----	38690.4 kWh(I) Tot	6061.15 kVArh(Lg)-Wh(I)	6.95 kVArh(Ld)-Wh(I)	39319.25 kVAh-Wh(I)	
History - 1	01-Apr-23 12:00:00 AM	38678.6 kWh(I) Tot	6057.9 kVArh(Lg)-Wh(I)	6.95 kVArh(Ld)-Wh(I)	39307 kVAh-Wh(I)	
History - 2	01-Mar-23 12:00:00 AM	37400.9 kWh(I) Tot	5834.25 kVArh(Lg)-Wh(I)	6.85 kVArh(Ld)-Wh(I)	38001.55 kVAh-Wh(I)	
History - 3	01-Feb-23 12:00:00 AM	36373.2 kWh(I) Tot	5661.35 kVArh(Lg)-Wh(I)	6.8 kVArh(Ld)-Wh(I)	36952.9 kVAh-Wh(I)	
History - 4	01-Jan-23 12:00:00 AM	35315 kWh(I) Tot	5475.05 kVArh(Lg)-Wh(I)	6.75 kVArh(Ld)-Wh(I)	35872 kVAh-Wh(I)	
History - 5	01-Dec-22 12:00:00 AM	34210.2 kWh(I) Tot	5276.9 kVArh(Lg)-Wh(I)	6.75 kVArh(Ld)-Wh(I)	34743.1 kVAh-Wh(I)	
History - 6	01-Nov-22 12:00:00 AM	33055.75 kWh(I) Tot	5112.2 kVArh(Lg)-Wh(I)	6 kVArh(Ld)-Wh(I)	33570 kVAh-Wh(I)	
History - 7	01-Oct-22 12:00:00 AM	31645.35 kWh(I) Tot	4893.15 kVArh(Lg)-Wh(I)	5.9 kVArh(Ld)-Wh(I)	32137.2 kVAh-Wh(I)	
History - 8	01-Sep-22 12:00:00 AM	30047 kWh(I) Tot	4623.55 kVArh(Lg)-Wh(I)	5.9 kVArh(Ld)-Wh(I)	30510.85 kVAh-Wh(I)	
History - 9	01-Aug-22 12:00:00 AM	28493.75 kWh(I) Tot	4378.1 kVArh(Lg)-Wh(I)	5.9 kVArh(Ld)-Wh(I)	28933.25 kVAh-Wh(I)	
History - 10	01-Jul-22 12:00:00 AM	26833.4 kWh(I) Tot	4116.1 kVArh(Lg)-Wh(I)	5.9 kVArh(Ld)-Wh(I)	27247.2 kVAh-Wh(I)	
History - 11	01-Jun-22 12:00:00 AM	25233.05 kWh(I) Tot	3863 kVArh(Lg)-Wh(I)	5.9 kVArh(Ld)-Wh(I)	25622.4 kVAh-Wh(I)	
History - 12	01-May-22 12:00:00 AM	23611.4 kWh(I) Tot	3598.75 kVArh(Lg)-Wh(I)	5.9 kVArh(Ld)-Wh(I)	23974.55 kVAh-Wh(I)	

Main energy registers

History	Billing Dates	Active(I) Total	Reactive(I)-Active(I)	Reactive(E)-Active(I)	Apparent-Active(I) - type 2	2984819
History - 0	----	599669.35 kWh(I) Tot	188257.1 kVArh(Lg)-Wh(I)	0 kVArh(Ld)-Wh(I)	630883 kVAh-Wh(I)	
History - 1	01-Apr-23 12:00:00 AM	594723.25 kWh(I) Tot	186779.65 kVArh(Lg)-Wh(I)	0 kVArh(Ld)-Wh(I)	625713.3 kVAh-Wh(I)	
History - 2	01-Mar-23 12:00:00 AM	573266.25 kWh(I) Tot	179342.05 kVArh(Lg)-Wh(I)	0 kVArh(Ld)-Wh(I)	602933.1 kVAh-Wh(I)	
History - 3	01-Feb-23 12:00:00 AM	554869.25 kWh(I) Tot	172119.5 kVArh(Lg)-Wh(I)	0 kVArh(Ld)-Wh(I)	583105.95 kVAh-Wh(I)	
History - 4	01-Jan-23 12:00:00 AM	537474.7 kWh(I) Tot	165203.95 kVArh(Lg)-Wh(I)	0 kVArh(Ld)-Wh(I)	564282.55 kVAh-Wh(I)	
History - 5	01-Dec-22 12:00:00 AM	520151.85 kWh(I) Tot	158255.35 kVArh(Lg)-Wh(I)	0 kVArh(Ld)-Wh(I)	545517.15 kVAh-Wh(I)	
History - 6	01-Nov-22 12:00:00 AM	501413.35 kWh(I) Tot	151200.95 kVArh(Lg)-Wh(I)	0 kVArh(Ld)-Wh(I)	525406.6 kVAh-Wh(I)	
History - 7	01-Oct-22 12:00:00 AM	481748.1 kWh(I) Tot	145289.9 kVArh(Lg)-Wh(I)	0 kVArh(Ld)-Wh(I)	504803.9 kVAh-Wh(I)	
History - 8	01-Sep-22 12:00:00 AM	460567.5 kWh(I) Tot	139212.6 kVArh(Lg)-Wh(I)	0 kVArh(Ld)-Wh(I)	482710.05 kVAh-Wh(I)	
History - 9	01-Aug-22 12:00:00 AM	439339.75 kWh(I) Tot	133183.55 kVArh(Lg)-Wh(I)	0 kVArh(Ld)-Wh(I)	460580.25 kVAh-Wh(I)	
History - 10	01-Jul-22 12:00:00 AM	418116.8 kWh(I) Tot	127332.6 kVArh(Lg)-Wh(I)	0 kVArh(Ld)-Wh(I)	438509.1 kVAh-Wh(I)	
History - 11	01-Jun-22 12:00:00 AM	395229.8 kWh(I) Tot	120545.8 kVArh(Lg)-Wh(I)	0 kVArh(Ld)-Wh(I)	414583.75 kVAh-Wh(I)	
History - 12	01-May-22 12:00:00 AM	371891.25 kWh(I) Tot	113582.55 kVArh(Lg)-Wh(I)	0 kVArh(Ld)-Wh(I)	390180.75 kVAh-Wh(I)	

Main energy registers

History	Billing Dates	Active(I) Total	Reactive(I)-Active(I)	Reactive(E)-Active(I)	Apparent-Active(I) - type 2	2984833
History - 0	----	379388.2 kWh(I) Tot	90036.75 kVArh(Lg)-Wh(I)	0 kVArh(Ld)-Wh(I)	390731.05 kVAh-Wh(I)	
History - 1	01-Apr-23 12:00:00 AM	377801.35 kWh(I) Tot	89654.45 kVArh(Lg)-Wh(I)	0 kVArh(Ld)-Wh(I)	389095.5 kVAh-Wh(I)	
History - 2	01-Mar-23 12:00:00 AM	367942.75 kWh(I) Tot	87304.15 kVArh(Lg)-Wh(I)	0 kVArh(Ld)-Wh(I)	378938.1 kVAh-Wh(I)	
History - 3	01-Feb-23 12:00:00 AM	360129.75 kWh(I) Tot	85390.95 kVArh(Lg)-Wh(I)	0 kVArh(Ld)-Wh(I)	370871.8 kVAh-Wh(I)	
History - 4	01-Jan-23 12:00:00 AM	352613.2 kWh(I) Tot	83618 kVArh(Lg)-Wh(I)	0 kVArh(Ld)-Wh(I)	363126.65 kVAh-Wh(I)	
History - 5	01-Dec-22 12:00:00 AM	344955.35 kWh(I) Tot	81608.4 kVArh(Lg)-Wh(I)	0 kVArh(Ld)-Wh(I)	355181.25 kVAh-Wh(I)	
History - 6	01-Nov-22 12:00:00 AM	336707.95 kWh(I) Tot	79472.15 kVArh(Lg)-Wh(I)	0 kVArh(Ld)-Wh(I)	346636.45 kVAh-Wh(I)	
History - 7	01-Oct-22 12:00:00 AM	326463.6 kWh(I) Tot	77096.8 kVArh(Lg)-Wh(I)	0 kVArh(Ld)-Wh(I)	336098.75 kVAh-Wh(I)	
History - 8	01-Sep-22 12:00:00 AM	315278.55 kWh(I) Tot	74604.4 kVArh(Lg)-Wh(I)	0 kVArh(Ld)-Wh(I)	324618.35 kVAh-Wh(I)	
History - 9	01-Aug-22 12:00:00 AM	304000.75 kWh(I) Tot	72010.5 kVArh(Lg)-Wh(I)	0 kVArh(Ld)-Wh(I)	313023 kVAh-Wh(I)	
History - 10	01-Jul-22 12:00:00 AM	292066.1 kWh(I) Tot	69184.25 kVArh(Lg)-Wh(I)	0 kVArh(Ld)-Wh(I)	300735.1 kVAh-Wh(I)	
History - 11	01-Jun-22 12:00:00 AM	279868.55 kWh(I) Tot	66422.5 kVArh(Lg)-Wh(I)	0 kVArh(Ld)-Wh(I)	288208.85 kVAh-Wh(I)	
History - 12	01-May-22 12:00:00 AM	267032.2 kWh(I) Tot	63395.35 kVArh(Lg)-Wh(I)	0 kVArh(Ld)-Wh(I)	275000.05 kVAh-Wh(I)	

Main energy registers

History	Billing Dates	Active(I) Total	Reactive(I)-Active(I)	Reactive(E)-Active(I)	Apparent-Active(I) - type 2	2984836
History - 0	----	461359.4 kWh(I) Tot	102292.1 kVArh(Lg)-Wh(I)	0 kVArh(Ld)-Wh(I)	473813 kVAh-Wh(I)	
History - 1	01-Apr-23 12:00:00 AM	459919.25 kWh(I) Tot	101936.05 kVArh(Lg)-Wh(I)	0 kVArh(Ld)-Wh(I)	472326.9 kVAh-Wh(I)	
History - 2	01-Mar-23 12:00:00 AM	450698 kWh(I) Tot	99722.05 kVArh(Lg)-Wh(I)	0 kVArh(Ld)-Wh(I)	462822.1 kVAh-Wh(I)	
History - 3	01-Feb-23 12:00:00 AM	442891.2 kWh(I) Tot	97692.75 kVArh(Lg)-Wh(I)	0 kVArh(Ld)-Wh(I)	454726.2 kVAh-Wh(I)	
History - 4	01-Jan-23 12:00:00 AM	435256.7 kWh(I) Tot	95759.2 kVArh(Lg)-Wh(I)	0 kVArh(Ld)-Wh(I)	446806.3 kVAh-Wh(I)	
History - 5	01-Dec-22 12:00:00 AM	427722.7 kWh(I) Tot	93622.6 kVArh(Lg)-Wh(I)	0 kVArh(Ld)-Wh(I)	438909.55 kVAh-Wh(I)	
History - 6	01-Nov-22 12:00:00 AM	419898.85 kWh(I) Tot	91471.55 kVArh(Lg)-Wh(I)	0 kVArh(Ld)-Wh(I)	430755.5 kVAh-Wh(I)	
History - 7	01-Oct-22 12:00:00 AM	410612.15 kWh(I) Tot	89324.65 kVArh(Lg)-Wh(I)	0 kVArh(Ld)-Wh(I)	421205.55 kVAh-Wh(I)	
History - 8	01-Sep-22 12:00:00 AM	400649.2 kWh(I) Tot	87175.3 kVArh(Lg)-Wh(I)	0 kVArh(Ld)-Wh(I)	410998.55 kVAh-Wh(I)	
History - 9	01-Aug-22 12:00:00 AM	390094.05 kWh(I) Tot	84773.05 kVArh(Lg)-Wh(I)	0 kVArh(Ld)-Wh(I)	400153.45 kVAh-Wh(I)	
History - 10	01-Jul-22 12:00:00 AM	378996.05 kWh(I) Tot	82080.95 kVArh(Lg)-Wh(I)	0 kVArh(Ld)-Wh(I)	388714.8 kVAh-Wh(I)	
History - 11	01-Jun-22 12:00:00 AM	367725.05 kWh(I) Tot	79604.1 kVArh(Lg)-Wh(I)	0 kVArh(Ld)-Wh(I)	377157.4 kVAh-Wh(I)	
History - 12	01-May-22 12:00:00 AM	356745.65 kWh(I) Tot	77136.9 kVArh(Lg)-Wh(I)	0 kVArh(Ld)-Wh(I)	365889.6 kVAh-Wh(I)	

Main energy registers

History	Billing Dates	Active(I) Total	Reactive(I)-Active(I)	Reactive(E)-Active(I)	Apparent-Active(I) - type 2	2984838
History - 0	----	16108.5 kWh(I) Tot	4577.6 kVArh(Lg)-Wh(I)	0.05 kVArh(Ld)-Wh(I)	16887.55 kVAh-Wh(I)	
History - 1	01-Apr-23 12:00:00 AM	15980.3 kWh(I) Tot	4544.7 kVArh(Lg)-Wh(I)	0.05 kVArh(Ld)-Wh(I)	16754.5 kVAh-Wh(I)	
History - 2	01-Mar-23 12:00:00 AM	15488.15 kWh(I) Tot	4406.15 kVArh(Lg)-Wh(I)	0.05 kVArh(Ld)-Wh(I)	16240.2 kVAh-Wh(I)	
History - 3	01-Feb-23 12:00:00 AM	15108.55 kWh(I) Tot	4228.9 kVArh(Lg)-Wh(I)	0.05 kVArh(Ld)-Wh(I)	15817.45 kVAh-Wh(I)	
History - 4	01-Jan-23 12:00:00 AM	14716.05 kWh(I) Tot	4030.55 kVArh(Lg)-Wh(I)	0 kVArh(Ld)-Wh(I)	15369.8 kVAh-Wh(I)	
History - 5	01-Dec-22 12:00:00 AM	14320.75 kWh(I) Tot	3854.55 kVArh(Lg)-Wh(I)	0 kVArh(Ld)-Wh(I)	14929.25 kVAh-Wh(I)	
History - 6	01-Nov-22 12:00:00 AM	13874.45 kWh(I) Tot	3679.25 kVArh(Lg)-Wh(I)	0 kVArh(Ld)-Wh(I)	14443.85 kVAh-Wh(I)	
History - 7	01-Oct-22 12:00:00 AM	13336.45 kWh(I) Tot	3496.4 kVArh(Lg)-Wh(I)	0 kVArh(Ld)-Wh(I)	13872.1 kVAh-Wh(I)	
History - 8	01-Sep-22 12:00:00 AM	12779.9 kWh(I) Tot	3334.9 kVArh(Lg)-Wh(I)	0 kVArh(Ld)-Wh(I)	13290.4 kVAh-Wh(I)	
History - 9	01-Aug-22 12:00:00 AM	12252.5 kWh(I) Tot	3185.2 kVArh(Lg)-Wh(I)	0 kVArh(Ld)-Wh(I)	12739.65 kVAh-Wh(I)	
History - 10	01-Jul-22 12:00:00 AM	11695.1 kWh(I) Tot	3032.8 kVArh(Lg)-Wh(I)	0 kVArh(Ld)-Wh(I)	12159.75 kVAh-Wh(I)	
History - 11	01-Jun-22 12:00:00 AM	11114.2 kWh(I) Tot	2878.55 kVArh(Lg)-Wh(I)	0 kVArh(Ld)-Wh(I)	11557.25 kVAh-Wh(I)	
History - 12	01-May-22 12:00:00 AM	10558.2 kWh(I) Tot	2732.6 kVArh(Lg)-Wh(I)	0 kVArh(Ld)-Wh(I)	10981.05 kVAh-Wh(I)	

Main energy registers

History	Billing Dates	Active(I) Total	Reactive(I)-Active(I)	Reactive(E)-Active(I)	Apparent-Active(I) - type 2	2984844
History - 0	----	18777.55 kWh(I) Tot	4066.67 kVArh(Lg)-Wh(I)	0 kVArh(Ld)-Wh(I)	19080.65 kVAh-Wh(I)	
History - 1	01-Apr-23 12:00:00 AM	18609.65 kWh(I) Tot	4038.77 kVArh(Lg)-Wh(I)	0 kVArh(Ld)-Wh(I)	18910.2 kVAh-Wh(I)	
History - 2	01-Mar-23 12:00:00 AM	12741.15 kWh(I) Tot	3142.77 kVArh(Lg)-Wh(I)	0 kVArh(Ld)-Wh(I)	12961.95 kVAh-Wh(I)	
History - 3	01-Dec-22 12:00:00 AM	9319.2 kWh(I) Tot	2621.42 kVArh(Lg)-Wh(I)	0 kVArh(Ld)-Wh(I)	9488.55 kVAh-Wh(I)	
History - 4	01-Nov-22 12:00:00 AM	9319.2 kWh(I) Tot	2621.42 kVArh(Lg)-Wh(I)	0 kVArh(Ld)-Wh(I)	9488.55 kVAh-Wh(I)	
History - 5	01-Oct-22 12:00:00 AM	11036.05 kWh(I) Tot	2004.2 kVArh(Lg)-Wh(I)	0 kVArh(Ld)-Wh(I)	11236.4 kVAh-Wh(I)	
History - 6	01-Sep-22 12:00:00 AM	8097.65 kWh(I) Tot	1486.5 kVArh(Lg)-Wh(I)	0 kVArh(Ld)-Wh(I)	8247.8 kVAh-Wh(I)	
History - 7	01-Aug-22 12:00:00 AM	4296.75 kWh(I) Tot	793.4 kVArh(Lg)-Wh(I)	0 kVArh(Ld)-Wh(I)	4376.6 kVAh-Wh(I)	
History - 8	01-Jul-22 12:00:00 AM	210.55 kWh(I) Tot	36.8 kVArh(Lg)-Wh(I)	0 kVArh(Ld)-Wh(I)	214 kVAh-Wh(I)	
History - 9	01-Nov-19 12:00:00 AM	0 kWh(I) Tot	0 kVArh(Lg)-Wh(I)	0 kVArh(Ld)-Wh(I)	0 kVAh-Wh(I)	
History - 10	01-Apr-19 12:00:00 AM	0 kWh(I) Tot	0 kVArh(Lg)-Wh(I)	0 kVArh(Ld)-Wh(I)	0 kVAh-Wh(I)	

Main energy registers

History	Billing Dates	Active(I) Total	Reactive(I)-Active(I)	Reactive(E)-Active(I)	Apparent-Active(I) - type 2	2984852

History - 0	----	332652.1 kWh(I) Tot	54797.85 kVArh(Lg)-Wh(I)	0 kVArh(Ld)-Wh(I)	337628.7 kVAh-Wh(I)
History - 1	01-Apr-23 12:00:00 AM	330901.55 kWh(I) Tot	54531.2 kVArh(Lg)-Wh(I)	0 kVArh(Ld)-Wh(I)	335856 kVAh-Wh(I)
History - 2	01-Mar-23 12:00:00 AM	315510.35 kWh(I) Tot	52201.8 kVArh(Lg)-Wh(I)	0 kVArh(Ld)-Wh(I)	320271.2 kVAh-Wh(I)
History - 3	01-Feb-23 12:00:00 AM	303137.4 kWh(I) Tot	50167.6 kVArh(Lg)-Wh(I)	0 kVArh(Ld)-Wh(I)	307707.75 kVAh-Wh(I)
History - 4	01-Jan-23 12:00:00 AM	290904.4 kWh(I) Tot	48099.7 kVArh(Lg)-Wh(I)	0 kVArh(Ld)-Wh(I)	295264.9 kVAh-Wh(I)
History - 5	01-Dec-22 12:00:00 AM	278474.9 kWh(I) Tot	46044.25 kVArh(Lg)-Wh(I)	0 kVArh(Ld)-Wh(I)	282631.35 kVAh-Wh(I)
History - 6	01-Nov-22 12:00:00 AM	264818.7 kWh(I) Tot	44012.85 kVArh(Lg)-Wh(I)	0 kVArh(Ld)-Wh(I)	268802.1 kVAh-Wh(I)
History - 7	01-Oct-22 12:00:00 AM	248451.95 kWh(I) Tot	41478.85 kVArh(Lg)-Wh(I)	0 kVArh(Ld)-Wh(I)	252221.65 kVAh-Wh(I)
History - 8	01-Sep-22 12:00:00 AM	231005.8 kWh(I) Tot	38677.5 kVArh(Lg)-Wh(I)	0 kVArh(Ld)-Wh(I)	234534.05 kVAh-Wh(I)
History - 9	01-Aug-22 12:00:00 AM	213579.3 kWh(I) Tot	35868.15 kVArh(Lg)-Wh(I)	0 kVArh(Ld)-Wh(I)	216864.35 kVAh-Wh(I)
History - 10	01-Jul-22 12:00:00 AM	195345.85 kWh(I) Tot	32860.7 kVArh(Lg)-Wh(I)	0 kVArh(Ld)-Wh(I)	198366.45 kVAh-Wh(I)
History - 11	01-Jun-22 12:00:00 AM	177657.4 kWh(I) Tot	29862.75 kVArh(Lg)-Wh(I)	0 kVArh(Ld)-Wh(I)	180409.4 kVAh-Wh(I)
History - 12	01-May-22 12:00:00 AM	160092.05 kWh(I) Tot	26778.25 kVArh(Lg)-Wh(I)	0 kVArh(Ld)-Wh(I)	162558.3 kVAh-Wh(I)

Main energy registers

History	Billing Dates	Active(I) Total	Reactive(I)-Active(I)	Reactive(E)-Active(I)	Apparent-Active(I) - type 2	2984855
History - 0	----	353481.85 kWh(I) Tot	89854.6 kVArh(Lg)-Wh(I)	0.2 kVArh(Ld)-Wh(I)	365972 kVAh-Wh(I)	
History - 1	01-Apr-23 12:00:00 AM	352273.3 kWh(I) Tot	89548 kVArh(Lg)-Wh(I)	0.2 kVArh(Ld)-Wh(I)	364723.1 kVAh-Wh(I)	
History - 2	01-Mar-23 12:00:00 AM	344438.65 kWh(I) Tot	87599.3 kVArh(Lg)-Wh(I)	0.2 kVArh(Ld)-Wh(I)	356633.75 kVAh-Wh(I)	
History - 3	01-Feb-23 12:00:00 AM	337868.55 kWh(I) Tot	85854.2 kVArh(Lg)-Wh(I)	0.2 kVArh(Ld)-Wh(I)	349814.6 kVAh-Wh(I)	
History - 4	01-Jan-23 12:00:00 AM	330922.25 kWh(I) Tot	84140.35 kVArh(Lg)-Wh(I)	0.2 kVArh(Ld)-Wh(I)	342629 kVAh-Wh(I)	
History - 5	01-Dec-22 12:00:00 AM	324110.05 kWh(I) Tot	82191 kVArh(Lg)-Wh(I)	0.2 kVArh(Ld)-Wh(I)	335502.65 kVAh-Wh(I)	
History - 6	01-Nov-22 12:00:00 AM	316293.1 kWh(I) Tot	79947.25 kVArh(Lg)-Wh(I)	0.2 kVArh(Ld)-Wh(I)	327340.4 kVAh-Wh(I)	
History - 7	01-Oct-22 12:00:00 AM	307561.85 kWh(I) Tot	77860.65 kVArh(Lg)-Wh(I)	0.2 kVArh(Ld)-Wh(I)	318344.95 kVAh-Wh(I)	
History - 8	01-Sep-22 12:00:00 AM	298360.65 kWh(I) Tot	75823.05 kVArh(Lg)-Wh(I)	0.2 kVArh(Ld)-Wh(I)	308906.8 kVAh-Wh(I)	
History - 9	01-Aug-22 12:00:00 AM	288811.2 kWh(I) Tot	73616.7 kVArh(Lg)-Wh(I)	0.2 kVArh(Ld)-Wh(I)	299087.7 kVAh-Wh(I)	
History - 10	01-Jul-22 12:00:00 AM	278874.6 kWh(I) Tot	71244.4 kVArh(Lg)-Wh(I)	0.2 kVArh(Ld)-Wh(I)	288855.25 kVAh-Wh(I)	
History - 11	01-Jun-22 12:00:00 AM	270053.45 kWh(I) Tot	69375.75 kVArh(Lg)-Wh(I)	0.2 kVArh(Ld)-Wh(I)	279824.35 kVAh-Wh(I)	
History - 12	01-May-22 12:00:00 AM	259310.85 kWh(I) Tot	66819.75 kVArh(Lg)-Wh(I)	0.2 kVArh(Ld)-Wh(I)	268764.25 kVAh-Wh(I)	

Main energy registers

History	Billing Dates	Active(I) Total	Reactive(I)-Active(I)	Reactive(E)-Active(I)	Apparent-Active(I) - type 2	2984862
History - 0	----	20385 kWh(I) Tot	4263.85 kVArh(Lg)-Wh(I)	0 kVArh(Ld)-Wh(I)	20886.15 kVAh-Wh(I)	
History - 1	01-Apr-23 12:00:00 AM	20372.8 kWh(I) Tot	4260.9 kVArh(Lg)-Wh(I)	0 kVArh(Ld)-Wh(I)	20873.55 kVAh-Wh(I)	
History - 2	01-Mar-23 12:00:00 AM	19727.7 kWh(I) Tot	4119.5 kVArh(Lg)-Wh(I)	0 kVArh(Ld)-Wh(I)	20212.1 kVAh-Wh(I)	
History - 3	01-Feb-23 12:00:00 AM	19207.1 kWh(I) Tot	3992.2 kVArh(Lg)-Wh(I)	0 kVArh(Ld)-Wh(I)	19674.35 kVAh-Wh(I)	
History - 4	01-Jan-23 12:00:00 AM	18657.95 kWh(I) Tot	3850.3 kVArh(Lg)-Wh(I)	0 kVArh(Ld)-Wh(I)	19104.2 kVAh-Wh(I)	
History - 5	01-Dec-22 12:00:00 AM	18117.65 kWh(I) Tot	3713.4 kVArh(Lg)-Wh(I)	0 kVArh(Ld)-Wh(I)	18543.65 kVAh-Wh(I)	
History - 6	01-Nov-22 12:00:00 AM	17523.25 kWh(I) Tot	3580.6 kVArh(Lg)-Wh(I)	0 kVArh(Ld)-Wh(I)	17932.7 kVAh-Wh(I)	
History - 7	01-Oct-22 12:00:00 AM	16775.4 kWh(I) Tot	3424.25 kVArh(Lg)-Wh(I)	0 kVArh(Ld)-Wh(I)	17167.3 kVAh-Wh(I)	
History - 8	01-Sep-22 12:00:00 AM	15971.3 kWh(I) Tot	3256 kVArh(Lg)-Wh(I)	0 kVArh(Ld)-Wh(I)	16344.6 kVAh-Wh(I)	
History - 9	01-Aug-22 12:00:00 AM	15167.25 kWh(I) Tot	3082.15 kVArh(Lg)-Wh(I)	0 kVArh(Ld)-Wh(I)	15520.75 kVAh-Wh(I)	
History - 10	01-Jul-22 12:00:00 AM	14328.25 kWh(I) Tot	2895.95 kVArh(Lg)-Wh(I)	0 kVArh(Ld)-Wh(I)	14660.15 kVAh-Wh(I)	
History - 11	01-Jun-22 12:00:00 AM	13515.4 kWh(I) Tot	2712.85 kVArh(Lg)-Wh(I)	0 kVArh(Ld)-Wh(I)	13826.05 kVAh-Wh(I)	
History - 12	01-May-22 12:00:00 AM	12686.1 kWh(I) Tot	2525.35 kVArh(Lg)-Wh(I)	0 kVArh(Ld)-Wh(I)	12974.9 kVAh-Wh(I)	

Main energy registers

History	Billing Dates	Active(I) Total	Reactive(I)-Active(I)	Reactive(E)-Active(I)	Apparent-Active(I) - type 2	2984876

History - 0	----	264218.55 kWh(I) Tot	41690.5 kVArh(Lg)-Wh(I)	0 kVArh(Ld)-Wh(I)	267981.75 kVAh-Wh(I)
History - 1	01-Apr-23 12:00:00 AM	262440.8 kWh(I) Tot	41385.8 kVArh(Lg)-Wh(I)	0 kVArh(Ld)-Wh(I)	266175.1 kVAh-Wh(I)
History - 2	01-Mar-23 12:00:00 AM	255219.45 kWh(I) Tot	40223.55 kVArh(Lg)-Wh(I)	0 kVArh(Ld)-Wh(I)	258846 kVAh-Wh(I)
History - 3	01-Feb-23 12:00:00 AM	249290.7 kWh(I) Tot	39261.15 kVArh(Lg)-Wh(I)	0 kVArh(Ld)-Wh(I)	252822.6 kVAh-Wh(I)
History - 4	01-Jan-23 12:00:00 AM	242161.35 kWh(I) Tot	38144.7 kVArh(Lg)-Wh(I)	0 kVArh(Ld)-Wh(I)	245580.95 kVAh-Wh(I)
History - 5	01-Dec-22 12:00:00 AM	234688.85 kWh(I) Tot	37041.85 kVArh(Lg)-Wh(I)	0 kVArh(Ld)-Wh(I)	238006.25 kVAh-Wh(I)
History - 6	01-Nov-22 12:00:00 AM	227006.65 kWh(I) Tot	35918.55 kVArh(Lg)-Wh(I)	0 kVArh(Ld)-Wh(I)	230226.1 kVAh-Wh(I)
History - 7	01-Oct-22 12:00:00 AM	217680.55 kWh(I) Tot	34514.75 kVArh(Lg)-Wh(I)	0 kVArh(Ld)-Wh(I)	220781.15 kVAh-Wh(I)
History - 8	01-Sep-22 12:00:00 AM	208220.25 kWh(I) Tot	33060.05 kVArh(Lg)-Wh(I)	0 kVArh(Ld)-Wh(I)	211198.05 kVAh-Wh(I)
History - 9	01-Aug-22 12:00:00 AM	198776.75 kWh(I) Tot	31587 kVArh(Lg)-Wh(I)	0 kVArh(Ld)-Wh(I)	201628.8 kVAh-Wh(I)
History - 10	01-Jul-22 12:00:00 AM	189197.25 kWh(I) Tot	30083.95 kVArh(Lg)-Wh(I)	0 kVArh(Ld)-Wh(I)	191920.15 kVAh-Wh(I)
History - 11	01-Jun-22 12:00:00 AM	179599.5 kWh(I) Tot	28572.5 kVArh(Lg)-Wh(I)	0 kVArh(Ld)-Wh(I)	182193.25 kVAh-Wh(I)
History - 12	01-May-22 12:00:00 AM	169674.8 kWh(I) Tot	26974.65 kVArh(Lg)-Wh(I)	0 kVArh(Ld)-Wh(I)	172130.2 kVAh-Wh(I)

Main energy registers

History	Billing Dates	Active(I) Total	Reactive(I)-Active(I)	Reactive(E)-Active(I)	Apparent-Active(I) - type 2	2984890
History - 0	----	244667.2 kWh(I) Tot	38729.7 kVArh(Lg)-Wh(I)	0.2 kVArh(Ld)-Wh(I)	248130.7 kVAh-Wh(I)	
History - 1	01-Apr-23 12:00:00 AM	243992.7 kWh(I) Tot	38655.35 kVArh(Lg)-Wh(I)	0.2 kVArh(Ld)-Wh(I)	247451.4 kVAh-Wh(I)	
History - 2	01-Mar-23 12:00:00 AM	239455.9 kWh(I) Tot	38109.45 kVArh(Lg)-Wh(I)	0.2 kVArh(Ld)-Wh(I)	242875.55 kVAh-Wh(I)	
History - 3	01-Feb-23 12:00:00 AM	235744 kWh(I) Tot	37629.85 kVArh(Lg)-Wh(I)	0.2 kVArh(Ld)-Wh(I)	239124.95 kVAh-Wh(I)	
History - 4	01-Jan-23 12:00:00 AM	231822.4 kWh(I) Tot	37202.5 kVArh(Lg)-Wh(I)	0.2 kVArh(Ld)-Wh(I)	235172.2 kVAh-Wh(I)	
History - 5	01-Dec-22 12:00:00 AM	227808.95 kWh(I) Tot	36686 kVArh(Lg)-Wh(I)	0.2 kVArh(Ld)-Wh(I)	231113.35 kVAh-Wh(I)	
History - 6	01-Nov-22 12:00:00 AM	223539.9 kWh(I) Tot	36138.15 kVArh(Lg)-Wh(I)	0.2 kVArh(Ld)-Wh(I)	226800.05 kVAh-Wh(I)	
History - 7	01-Oct-22 12:00:00 AM	218648.45 kWh(I) Tot	35519.55 kVArh(Lg)-Wh(I)	0.2 kVArh(Ld)-Wh(I)	221862.3 kVAh-Wh(I)	
History - 8	01-Sep-22 12:00:00 AM	213552.35 kWh(I) Tot	34864.05 kVArh(Lg)-Wh(I)	0.2 kVArh(Ld)-Wh(I)	216717.95 kVAh-Wh(I)	
History - 9	01-Aug-22 12:00:00 AM	208143.85 kWh(I) Tot	34202.4 kVArh(Lg)-Wh(I)	0.2 kVArh(Ld)-Wh(I)	211261.95 kVAh-Wh(I)	
History - 10	01-Jul-22 12:00:00 AM	202535.45 kWh(I) Tot	33473.1 kVArh(Lg)-Wh(I)	0.2 kVArh(Ld)-Wh(I)	205599.15 kVAh-Wh(I)	
History - 11	01-Jun-22 12:00:00 AM	197296.4 kWh(I) Tot	32785.4 kVArh(Lg)-Wh(I)	0.2 kVArh(Ld)-Wh(I)	200309.25 kVAh-Wh(I)	
History - 12	01-May-22 12:00:00 AM	191680.8 kWh(I) Tot	32050.1 kVArh(Lg)-Wh(I)	0.2 kVArh(Ld)-Wh(I)	194639.5 kVAh-Wh(I)	

Main energy registers

History	Billing Dates	Active(I) Total	Reactive(I)-Active(I)	Reactive(E)-Active(I)	Apparent-Active(I) - type 2	2984894
History - 0	----	251901.6 kWh(I) Tot	69894.15 kVArh(Lg)-Wh(I)	0 kVArh(Ld)-Wh(I)	262129.9 kVAh-Wh(I)	
History - 1	01-Apr-23 12:00:00 AM	250625.55 kWh(I) Tot	69530.35 kVArh(Lg)-Wh(I)	0 kVArh(Ld)-Wh(I)	260799.9 kVAh-Wh(I)	
History - 2	01-Mar-23 12:00:00 AM	239968.35 kWh(I) Tot	66560.8 kVArh(Lg)-Wh(I)	0 kVArh(Ld)-Wh(I)	249712.45 kVAh-Wh(I)	
History - 3	01-Feb-23 12:00:00 AM	231404.25 kWh(I) Tot	64053.35 kVArh(Lg)-Wh(I)	0 kVArh(Ld)-Wh(I)	240764.9 kVAh-Wh(I)	
History - 4	01-Jan-23 12:00:00 AM	222985 kWh(I) Tot	61438.85 kVArh(Lg)-Wh(I)	0 kVArh(Ld)-Wh(I)	231922.15 kVAh-Wh(I)	
History - 5	01-Dec-22 12:00:00 AM	214807.7 kWh(I) Tot	59127.25 kVArh(Lg)-Wh(I)	0 kVArh(Ld)-Wh(I)	223399.15 kVAh-Wh(I)	
History - 6	01-Nov-22 12:00:00 AM	206155.4 kWh(I) Tot	56753.15 kVArh(Lg)-Wh(I)	0 kVArh(Ld)-Wh(I)	214404.1 kVAh-Wh(I)	
History - 7	01-Oct-22 12:00:00 AM	195965.6 kWh(I) Tot	54226.95 kVArh(Lg)-Wh(I)	0 kVArh(Ld)-Wh(I)	203887.1 kVAh-Wh(I)	
History - 8	01-Sep-22 12:00:00 AM	184249.9 kWh(I) Tot	51315.1 kVArh(Lg)-Wh(I)	0 kVArh(Ld)-Wh(I)	191791.85 kVAh-Wh(I)	
History - 9	01-Aug-22 12:00:00 AM	172625.4 kWh(I) Tot	48492.45 kVArh(Lg)-Wh(I)	0 kVArh(Ld)-Wh(I)	179805.5 kVAh-Wh(I)	
History - 10	01-Jul-22 12:00:00 AM	160075.55 kWh(I) Tot	45363.2 kVArh(Lg)-Wh(I)	0 kVArh(Ld)-Wh(I)	166847.1 kVAh-Wh(I)	
History - 11	01-Jun-22 12:00:00 AM	146793.15 kWh(I) Tot	41971.25 kVArh(Lg)-Wh(I)	0 kVArh(Ld)-Wh(I)	153111.85 kVAh-Wh(I)	
History - 12	01-May-22 12:00:00 AM	132604.25 kWh(I) Tot	38593.8 kVArh(Lg)-Wh(I)	0 kVArh(Ld)-Wh(I)	138500.5 kVAh-Wh(I)	

Main energy registers

History	Billing Dates	Active(I) Total	Reactive(I)-Active(I)	Reactive(E)-Active(I)	Apparent-Active(I) - type 2	2984901

History - 0	----	105150.7 kWh(I) Tot	30985.45 kVArh(Lg)-Wh(I)	0 kVArh(Ld)-Wh(I)	110155.3 kVAh-Wh(I)
History - 1	01-Apr-23 12:00:00 AM	104269.6 kWh(I) Tot	30733.05 kVArh(Lg)-Wh(I)	0 kVArh(Ld)-Wh(I)	109235.15 kVAh-Wh(I)
History - 2	01-Mar-23 12:00:00 AM	98825.25 kWh(I) Tot	29060.75 kVArh(Lg)-Wh(I)	0 kVArh(Ld)-Wh(I)	103513.35 kVAh-Wh(I)
History - 3	01-Feb-23 12:00:00 AM	94691.5 kWh(I) Tot	27589.3 kVArh(Lg)-Wh(I)	0 kVArh(Ld)-Wh(I)	99099.7 kVAh-Wh(I)
History - 4	01-Jan-23 12:00:00 AM	91476.6 kWh(I) Tot	26451.5 kVArh(Lg)-Wh(I)	0 kVArh(Ld)-Wh(I)	95667.25 kVAh-Wh(I)
History - 5	01-Dec-22 12:00:00 AM	88269.2 kWh(I) Tot	25323.95 kVArh(Lg)-Wh(I)	0 kVArh(Ld)-Wh(I)	92241.1 kVAh-Wh(I)
History - 6	01-Nov-22 12:00:00 AM	84625.4 kWh(I) Tot	24034.25 kVArh(Lg)-Wh(I)	0 kVArh(Ld)-Wh(I)	88354.75 kVAh-Wh(I)
History - 7	01-Oct-22 12:00:00 AM	80480.05 kWh(I) Tot	22921.85 kVArh(Lg)-Wh(I)	0 kVArh(Ld)-Wh(I)	84050.95 kVAh-Wh(I)
History - 8	01-Sep-22 12:00:00 AM	75835.75 kWh(I) Tot	21699.5 kVArh(Lg)-Wh(I)	0 kVArh(Ld)-Wh(I)	79237.35 kVAh-Wh(I)
History - 9	01-Aug-22 12:00:00 AM	71042.8 kWh(I) Tot	20350.95 kVArh(Lg)-Wh(I)	0 kVArh(Ld)-Wh(I)	74242.6 kVAh-Wh(I)
History - 10	01-Jul-22 12:00:00 AM	65921.4 kWh(I) Tot	18816.2 kVArh(Lg)-Wh(I)	0 kVArh(Ld)-Wh(I)	68881.1 kVAh-Wh(I)
History - 11	01-Jun-22 12:00:00 AM	61010.2 kWh(I) Tot	17451.35 kVArh(Lg)-Wh(I)	0 kVArh(Ld)-Wh(I)	63771.8 kVAh-Wh(I)
History - 12	01-May-22 12:00:00 AM	55801.25 kWh(I) Tot	15870.65 kVArh(Lg)-Wh(I)	0 kVArh(Ld)-Wh(I)	58313.65 kVAh-Wh(I)

Main energy registers

History	Billing Dates	Active(I) Total	Reactive(I)-Active(I)	Reactive(E)-Active(I)	Apparent-Active(I) - type 2	2984915
History - 0	----	574917.9 kWh(I) Tot	104070.25 kVArh(Lg)-Wh(I)	0 kVArh(Ld)-Wh(I)	586102.7 kVAh-Wh(I)	
History - 1	01-Apr-23 12:00:00 AM	571838.15 kWh(I) Tot	103469.9 kVArh(Lg)-Wh(I)	0 kVArh(Ld)-Wh(I)	582956.9 kVAh-Wh(I)	
History - 2	01-Mar-23 12:00:00 AM	550302.3 kWh(I) Tot	99509.95 kVArh(Lg)-Wh(I)	0 kVArh(Ld)-Wh(I)	561002.8 kVAh-Wh(I)	
History - 3	01-Feb-23 12:00:00 AM	534528.9 kWh(I) Tot	96722.85 kVArh(Lg)-Wh(I)	0 kVArh(Ld)-Wh(I)	544935.85 kVAh-Wh(I)	
History - 4	01-Jan-23 12:00:00 AM	517818.05 kWh(I) Tot	93999.9 kVArh(Lg)-Wh(I)	0 kVArh(Ld)-Wh(I)	527933.25 kVAh-Wh(I)	
History - 5	01-Dec-22 12:00:00 AM	500812.75 kWh(I) Tot	91099.7 kVArh(Lg)-Wh(I)	0 kVArh(Ld)-Wh(I)	510605.35 kVAh-Wh(I)	
History - 6	01-Nov-22 12:00:00 AM	482286.6 kWh(I) Tot	88021.3 kVArh(Lg)-Wh(I)	0 kVArh(Ld)-Wh(I)	491774.5 kVAh-Wh(I)	
History - 7	01-Oct-22 12:00:00 AM	461433.55 kWh(I) Tot	84376.2 kVArh(Lg)-Wh(I)	0 kVArh(Ld)-Wh(I)	470561.3 kVAh-Wh(I)	
History - 8	01-Sep-22 12:00:00 AM	439503.1 kWh(I) Tot	80189 kVArh(Lg)-Wh(I)	0 kVArh(Ld)-Wh(I)	448190.45 kVAh-Wh(I)	
History - 9	01-Aug-22 12:00:00 AM	418767.65 kWh(I) Tot	76688.95 kVArh(Lg)-Wh(I)	0 kVArh(Ld)-Wh(I)	427133.7 kVAh-Wh(I)	
History - 10	01-Jul-22 12:00:00 AM	397230.3 kWh(I) Tot	72571.05 kVArh(Lg)-Wh(I)	0 kVArh(Ld)-Wh(I)	405170.65 kVAh-Wh(I)	
History - 11	01-Jun-22 12:00:00 AM	374885.15 kWh(I) Tot	68033.85 kVArh(Lg)-Wh(I)	0 kVArh(Ld)-Wh(I)	382331.1 kVAh-Wh(I)	
History - 12	01-May-22 12:00:00 AM	353983.6 kWh(I) Tot	63680.45 kVArh(Lg)-Wh(I)	0 kVArh(Ld)-Wh(I)	360943.7 kVAh-Wh(I)	

Main energy registers

History	Billing Dates	Active(I) Total	Reactive(I)-Active(I)	Reactive(E)-Active(I)	Apparent-Active(I) - type 2	2984917
History - 0	----	131606.55 kWh(I) Tot	21429 kVArh(Lg)-Wh(I)	0 kVArh(Ld)-Wh(I)	133657.45 kVAh-Wh(I)	
History - 1	01-Nov-20 12:00:00 AM	127138.65 kWh(I) Tot	20688.7 kVArh(Lg)-Wh(I)	0 kVArh(Ld)-Wh(I)	129119.65 kVAh-Wh(I)	
History - 2	01-Oct-20 12:00:00 AM	120986.65 kWh(I) Tot	19525.5 kVArh(Lg)-Wh(I)	0 kVArh(Ld)-Wh(I)	122836.3 kVAh-Wh(I)	
History - 3	01-Sep-20 12:00:00 AM	115070.8 kWh(I) Tot	18485.15 kVArh(Lg)-Wh(I)	0 kVArh(Ld)-Wh(I)	116805.6 kVAh-Wh(I)	
History - 4	01-Aug-20 12:00:00 AM	109174.8 kWh(I) Tot	17471.3 kVArh(Lg)-Wh(I)	0 kVArh(Ld)-Wh(I)	110798.6 kVAh-Wh(I)	
History - 5	01-Jul-20 12:00:00 AM	102948.8 kWh(I) Tot	16421.35 kVArh(Lg)-Wh(I)	0 kVArh(Ld)-Wh(I)	104468.35 kVAh-Wh(I)	
History - 6	01-Jun-20 12:00:00 AM	96578 kWh(I) Tot	15477 kVArh(Lg)-Wh(I)	0 kVArh(Ld)-Wh(I)	98017.15 kVAh-Wh(I)	
History - 7	01-May-20 12:00:00 AM	89573.5 kWh(I) Tot	14390.75 kVArh(Lg)-Wh(I)	0 kVArh(Ld)-Wh(I)	90918.25 kVAh-Wh(I)	
History - 8	01-Apr-20 12:00:00 AM	82742.05 kWh(I) Tot	13342.75 kVArh(Lg)-Wh(I)	0 kVArh(Ld)-Wh(I)	83995.9 kVAh-Wh(I)	
History - 9	01-Mar-20 12:00:00 AM	75470.7 kWh(I) Tot	12188.5 kVArh(Lg)-Wh(I)	0 kVArh(Ld)-Wh(I)	76622.6 kVAh-Wh(I)	
History - 10	01-Feb-20 12:00:00 AM	68449.2 kWh(I) Tot	10972.3 kVArh(Lg)-Wh(I)	0 kVArh(Ld)-Wh(I)	69487.85 kVAh-Wh(I)	
History - 11	01-Jan-20 12:00:00 AM	61556.25 kWh(I) Tot	9746.05 kVArh(Lg)-Wh(I)	0 kVArh(Ld)-Wh(I)	62477.5 kVAh-Wh(I)	
History - 12	01-Dec-19 12:00:00 AM	54461.8 kWh(I) Tot	8482.25 kVArh(Lg)-Wh(I)	0 kVArh(Ld)-Wh(I)	55259.5 kVAh-Wh(I)	

Main energy registers

History	Billing Dates	Active(I) Total	Reactive(I)-Active(I)	Reactive(E)-Active(I)	Apparent-Active(I) - type 2	2984921

History - 0	----	1985923.1 kWh(I) Tot	1972778.05 kVArh(Lg)-Wh(I)	5898241.05 kVArh(Ld)-Wh(I)	3953242.65 kVAh-Wh(I)
History - 1	01-Apr-23 12:00:00 AM	1985345.15 kWh(I) Tot	1972603.65 kVArh(Lg)-Wh(I)	5898241.05 kVArh(Ld)-Wh(I)	3952637.6 kVAh-Wh(I)
History - 2	01-Mar-23 12:00:00 AM	1981728.15 kWh(I) Tot	1971495.75 kVArh(Lg)-Wh(I)	5898241.05 kVArh(Ld)-Wh(I)	3948842.85 kVAh-Wh(I)
History - 3	01-Feb-23 12:00:00 AM	1979173.05 kWh(I) Tot	1970594.25 kVArh(Lg)-Wh(I)	5898241.05 kVArh(Ld)-Wh(I)	3946122.75 kVAh-Wh(I)
History - 4	01-Jan-23 12:00:00 AM	1976727.05 kWh(I) Tot	1969721.4 kVArh(Lg)-Wh(I)	5898241.05 kVArh(Ld)-Wh(I)	3943511.6 kVAh-Wh(I)
History - 5	01-Dec-22 12:00:00 AM	1973351.7 kWh(I) Tot	1968510.3 kVArh(Lg)-Wh(I)	5898241.05 kVArh(Ld)-Wh(I)	3939896.9 kVAh-Wh(I)
History - 6	01-Nov-22 12:00:00 AM	1969493.35 kWh(I) Tot	1967005.1 kVArh(Lg)-Wh(I)	5898241.05 kVArh(Ld)-Wh(I)	3935733.85 kVAh-Wh(I)
History - 7	01-Oct-22 12:00:00 AM	151887.2 kWh(I) Tot	48458.55 kVArh(Lg)-Wh(I)	0 kVArh(Ld)-Wh(I)	160155.8 kVAh-Wh(I)
History - 8	01-Sep-22 12:00:00 AM	146997.3 kWh(I) Tot	46923.3 kVArh(Lg)-Wh(I)	0 kVArh(Ld)-Wh(I)	155018.65 kVAh-Wh(I)
History - 9	01-Aug-22 12:00:00 AM	141928.85 kWh(I) Tot	45269.25 kVArh(Lg)-Wh(I)	0 kVArh(Ld)-Wh(I)	149672.15 kVAh-Wh(I)
History - 10	01-Jul-22 12:00:00 AM	136517.9 kWh(I) Tot	43447.05 kVArh(Lg)-Wh(I)	0 kVArh(Ld)-Wh(I)	143944.8 kVAh-Wh(I)
History - 11	01-Jun-22 12:00:00 AM	131129 kWh(I) Tot	42077.2 kVArh(Lg)-Wh(I)	0 kVArh(Ld)-Wh(I)	138375.2 kVAh-Wh(I)
History - 12	01-May-22 12:00:00 AM	125820 kWh(I) Tot	40601.75 kVArh(Lg)-Wh(I)	0 kVArh(Ld)-Wh(I)	132855.3 kVAh-Wh(I)

Main energy registers

History	Billing Dates	Active(I) Total	Reactive(I)-Active(I)	Reactive(E)-Active(I)	Apparent-Active(I) - type 2	2984922
History - 0	----	133873.5 kWh(I) Tot	23806.04 kVArh(Lg)-Wh(I)	0 kVArh(Ld)-Wh(I)	136846.85 kVAh-Wh(I)	
History - 1	01-Apr-23 12:00:00 AM	133257.55 kWh(I) Tot	23720.34 kVArh(Lg)-Wh(I)	0 kVArh(Ld)-Wh(I)	136223.8 kVAh-Wh(I)	
History - 2	01-Mar-23 12:00:00 AM	128608.7 kWh(I) Tot	23039.94 kVArh(Lg)-Wh(I)	0 kVArh(Ld)-Wh(I)	131514.05 kVAh-Wh(I)	
History - 3	01-Feb-23 12:00:00 AM	125048.4 kWh(I) Tot	22391.59 kVArh(Lg)-Wh(I)	0 kVArh(Ld)-Wh(I)	127874.45 kVAh-Wh(I)	
History - 4	01-Jan-23 12:00:00 AM	121398.6 kWh(I) Tot	21666.49 kVArh(Lg)-Wh(I)	0 kVArh(Ld)-Wh(I)	124114.3 kVAh-Wh(I)	
History - 5	01-Dec-22 12:00:00 AM	117668.35 kWh(I) Tot	20998.64 kVArh(Lg)-Wh(I)	0 kVArh(Ld)-Wh(I)	120291.05 kVAh-Wh(I)	
History - 6	01-Nov-22 12:00:00 AM	113520.95 kWh(I) Tot	20303.89 kVArh(Lg)-Wh(I)	0 kVArh(Ld)-Wh(I)	116067.05 kVAh-Wh(I)	
History - 7	01-Oct-22 12:00:00 AM	108393.9 kWh(I) Tot	19460.69 kVArh(Lg)-Wh(I)	0 kVArh(Ld)-Wh(I)	110856.55 kVAh-Wh(I)	
History - 8	01-Sep-22 12:00:00 AM	103372.3 kWh(I) Tot	18701.39 kVArh(Lg)-Wh(I)	0 kVArh(Ld)-Wh(I)	105768.4 kVAh-Wh(I)	
History - 9	01-Aug-22 12:00:00 AM	98511.05 kWh(I) Tot	18035.24 kVArh(Lg)-Wh(I)	0 kVArh(Ld)-Wh(I)	100851.7 kVAh-Wh(I)	
History - 10	01-Jul-22 12:00:00 AM	93663.15 kWh(I) Tot	17418.69 kVArh(Lg)-Wh(I)	0 kVArh(Ld)-Wh(I)	95957.4 kVAh-Wh(I)	
History - 11	01-Jun-22 12:00:00 AM	88797.7 kWh(I) Tot	16772.54 kVArh(Lg)-Wh(I)	0 kVArh(Ld)-Wh(I)	91043.1 kVAh-Wh(I)	
History - 12	01-May-22 12:00:00 AM	84368.05 kWh(I) Tot	16178.09 kVArh(Lg)-Wh(I)	0 kVArh(Ld)-Wh(I)	86567.7 kVAh-Wh(I)	

Main energy registers

History	Billing Dates	Active(I) Total	Reactive(I)-Active(I)	Reactive(E)-Active(I)	Apparent-Active(I) - type 2	2984924
History - 0	----	394158.5 kWh(I) Tot	47234.45 kVArh(Lg)-Wh(I)	0 kVArh(Ld)-Wh(I)	397393.2 kVAh-Wh(I)	
History - 1	01-Apr-23 12:00:00 AM	392315.15 kWh(I) Tot	46997.3 kVArh(Lg)-Wh(I)	0 kVArh(Ld)-Wh(I)	395532.95 kVAh-Wh(I)	
History - 2	01-Mar-23 12:00:00 AM	375956.2 kWh(I) Tot	44942.35 kVArh(Lg)-Wh(I)	0 kVArh(Ld)-Wh(I)	379027.75 kVAh-Wh(I)	
History - 3	01-Feb-23 12:00:00 AM	362174.6 kWh(I) Tot	43181.35 kVArh(Lg)-Wh(I)	0 kVArh(Ld)-Wh(I)	365114.1 kVAh-Wh(I)	
History - 4	01-Jan-23 12:00:00 AM	347332.45 kWh(I) Tot	41367.55 kVArh(Lg)-Wh(I)	0 kVArh(Ld)-Wh(I)	350135.9 kVAh-Wh(I)	
History - 5	01-Dec-22 12:00:00 AM	332484.2 kWh(I) Tot	39679.5 kVArh(Lg)-Wh(I)	0 kVArh(Ld)-Wh(I)	335172.5 kVAh-Wh(I)	
History - 6	01-Nov-22 12:00:00 AM	317075.8 kWh(I) Tot	37984.05 kVArh(Lg)-Wh(I)	0 kVArh(Ld)-Wh(I)	319654.9 kVAh-Wh(I)	
History - 7	01-Oct-22 12:00:00 AM	299482.8 kWh(I) Tot	35941.45 kVArh(Lg)-Wh(I)	0 kVArh(Ld)-Wh(I)	301928.35 kVAh-Wh(I)	
History - 8	01-Sep-22 12:00:00 AM	281492.75 kWh(I) Tot	33792.85 kVArh(Lg)-Wh(I)	0 kVArh(Ld)-Wh(I)	283795.6 kVAh-Wh(I)	
History - 9	01-Aug-22 12:00:00 AM	263037.8 kWh(I) Tot	31637.8 kVArh(Lg)-Wh(I)	0 kVArh(Ld)-Wh(I)	265200 kVAh-Wh(I)	
History - 10	01-Jul-22 12:00:00 AM	244189.7 kWh(I) Tot	29294.05 kVArh(Lg)-Wh(I)	0 kVArh(Ld)-Wh(I)	246190.35 kVAh-Wh(I)	
History - 11	01-Jun-22 12:00:00 AM	225952.4 kWh(I) Tot	26933.1 kVArh(Lg)-Wh(I)	0 kVArh(Ld)-Wh(I)	227786 kVAh-Wh(I)	
History - 12	01-May-22 12:00:00 AM	207194.7 kWh(I) Tot	24482.5 kVArh(Lg)-Wh(I)	0 kVArh(Ld)-Wh(I)	208853.15 kVAh-Wh(I)	

Main energy registers

History	Billing Dates	Active(I) Total	Reactive(I)-Active(I)	Reactive(E)-Active(I)	Apparent-Active(I) - type 2	2984925

History - 0	----	326055.4 kWh(I) Tot	48009.7 kVArh(Lg)-Wh(I)	0 kVArh(Ld)-Wh(I)	330526.6 kVAh-Wh(I)
History - 1	01-Apr-23 12:00:00 AM	324033.7 kWh(I) Tot	47687.9 kVArh(Lg)-Wh(I)	0 kVArh(Ld)-Wh(I)	328475.2 kVAh-Wh(I)
History - 2	01-Mar-23 12:00:00 AM	314198.9 kWh(I) Tot	45991.85 kVArh(Lg)-Wh(I)	0 kVArh(Ld)-Wh(I)	318467 kVAh-Wh(I)
History - 3	01-Feb-23 12:00:00 AM	306159.95 kWh(I) Tot	44544.25 kVArh(Lg)-Wh(I)	0 kVArh(Ld)-Wh(I)	310259.5 kVAh-Wh(I)
History - 4	01-Jan-23 12:00:00 AM	297335.35 kWh(I) Tot	43064.95 kVArh(Lg)-Wh(I)	0 kVArh(Ld)-Wh(I)	301257.9 kVAh-Wh(I)
History - 5	01-Dec-22 12:00:00 AM	288617.05 kWh(I) Tot	41466.7 kVArh(Lg)-Wh(I)	0 kVArh(Ld)-Wh(I)	292325.7 kVAh-Wh(I)
History - 6	01-Nov-22 12:00:00 AM	279411.6 kWh(I) Tot	39871.6 kVArh(Lg)-Wh(I)	0 kVArh(Ld)-Wh(I)	282935.35 kVAh-Wh(I)
History - 7	01-Oct-22 12:00:00 AM	268665.6 kWh(I) Tot	38231.65 kVArh(Lg)-Wh(I)	0 kVArh(Ld)-Wh(I)	272038.75 kVAh-Wh(I)
History - 8	01-Sep-22 12:00:00 AM	257593.95 kWh(I) Tot	36668.5 kVArh(Lg)-Wh(I)	0 kVArh(Ld)-Wh(I)	260840.6 kVAh-Wh(I)
History - 9	01-Aug-22 12:00:00 AM	246020.55 kWh(I) Tot	34943.7 kVArh(Lg)-Wh(I)	0 kVArh(Ld)-Wh(I)	249118.2 kVAh-Wh(I)
History - 10	01-Jul-22 12:00:00 AM	234106.2 kWh(I) Tot	33096.1 kVArh(Lg)-Wh(I)	0 kVArh(Ld)-Wh(I)	237041.7 kVAh-Wh(I)
History - 11	01-Jun-22 12:00:00 AM	223322.5 kWh(I) Tot	31398.25 kVArh(Lg)-Wh(I)	0 kVArh(Ld)-Wh(I)	226109.05 kVAh-Wh(I)
History - 12	01-May-22 12:00:00 AM	212035.45 kWh(I) Tot	29617.95 kVArh(Lg)-Wh(I)	0 kVArh(Ld)-Wh(I)	214667.3 kVAh-Wh(I)

Main energy registers

History	Billing Dates	Active(I) Total	Reactive(I)-Active(I)	Reactive(E)-Active(I)	Apparent-Active(I) - type 2	2984940
History - 0	----	51687.75 kWh(I) Tot	15292.8 kVArh(Lg)-Wh(I)	0 kVArh(Ld)-Wh(I)	54099.45 kVAh-Wh(I)	
History - 1	01-Apr-23 12:00:00 AM	51424.45 kWh(I) Tot	15204.2 kVArh(Lg)-Wh(I)	0 kVArh(Ld)-Wh(I)	53821.05 kVAh-Wh(I)	
History - 2	01-Mar-23 12:00:00 AM	49636.6 kWh(I) Tot	14560.45 kVArh(Lg)-Wh(I)	0 kVArh(Ld)-Wh(I)	51915.65 kVAh-Wh(I)	
History - 3	01-Feb-23 12:00:00 AM	48184 kWh(I) Tot	13970.65 kVArh(Lg)-Wh(I)	0 kVArh(Ld)-Wh(I)	50341.35 kVAh-Wh(I)	
History - 4	01-Jan-23 12:00:00 AM	46767.3 kWh(I) Tot	13401.45 kVArh(Lg)-Wh(I)	0 kVArh(Ld)-Wh(I)	48806.5 kVAh-Wh(I)	
History - 5	01-Dec-22 12:00:00 AM	45360.55 kWh(I) Tot	12918.9 kVArh(Lg)-Wh(I)	0 kVArh(Ld)-Wh(I)	47312.25 kVAh-Wh(I)	
History - 6	01-Nov-22 12:00:00 AM	43799.5 kWh(I) Tot	12365.05 kVArh(Lg)-Wh(I)	0 kVArh(Ld)-Wh(I)	45649.95 kVAh-Wh(I)	
History - 7	01-Oct-22 12:00:00 AM	41975.35 kWh(I) Tot	11855.9 kVArh(Lg)-Wh(I)	0 kVArh(Ld)-Wh(I)	43752.15 kVAh-Wh(I)	
History - 8	01-Sep-22 12:00:00 AM	39977.95 kWh(I) Tot	11320.5 kVArh(Lg)-Wh(I)	0 kVArh(Ld)-Wh(I)	41681.05 kVAh-Wh(I)	
History - 9	01-Aug-22 12:00:00 AM	37878.55 kWh(I) Tot	10761.1 kVArh(Lg)-Wh(I)	0 kVArh(Ld)-Wh(I)	39504.35 kVAh-Wh(I)	
History - 10	01-Jul-22 12:00:00 AM	35773.65 kWh(I) Tot	10202.9 kVArh(Lg)-Wh(I)	0 kVArh(Ld)-Wh(I)	37323.15 kVAh-Wh(I)	
History - 11	01-Jun-22 12:00:00 AM	33616.9 kWh(I) Tot	9601.6 kVArh(Lg)-Wh(I)	0 kVArh(Ld)-Wh(I)	35080.7 kVAh-Wh(I)	
History - 12	01-May-22 12:00:00 AM	31340.05 kWh(I) Tot	8994 kVArh(Lg)-Wh(I)	0 kVArh(Ld)-Wh(I)	32720.65 kVAh-Wh(I)	

Main energy registers

History	Billing Dates	Active(I) Total	Reactive(I)-Active(I)	Reactive(E)-Active(I)	Apparent-Active(I) - type 2	2984943
History - 0	----	153982.65 kWh(I) Tot	35721 kVArh(Lg)-Wh(I)	359.55 kVArh(Ld)-Wh(I)	159474.75 kVAh-Wh(I)	
History - 1	01-Apr-23 12:00:00 AM	153256.55 kWh(I) Tot	35624.9 kVArh(Lg)-Wh(I)	356.25 kVArh(Ld)-Wh(I)	158737.95 kVAh-Wh(I)	
History - 2	01-Mar-23 12:00:00 AM	148903.7 kWh(I) Tot	35038.95 kVArh(Lg)-Wh(I)	313.35 kVArh(Ld)-Wh(I)	154315.7 kVAh-Wh(I)	
History - 3	01-Feb-23 12:00:00 AM	145345.55 kWh(I) Tot	34524.7 kVArh(Lg)-Wh(I)	257.9 kVArh(Ld)-Wh(I)	150692.1 kVAh-Wh(I)	
History - 4	01-Jan-23 12:00:00 AM	141637.85 kWh(I) Tot	34181.8 kVArh(Lg)-Wh(I)	118.1 kVArh(Ld)-Wh(I)	146935.1 kVAh-Wh(I)	
History - 5	01-Dec-22 12:00:00 AM	138654.2 kWh(I) Tot	33787.25 kVArh(Lg)-Wh(I)	2.65 kVArh(Ld)-Wh(I)	143881.7 kVAh-Wh(I)	
History - 6	01-Nov-22 12:00:00 AM	135169.35 kWh(I) Tot	32852.15 kVArh(Lg)-Wh(I)	1.9 kVArh(Ld)-Wh(I)	140248.35 kVAh-Wh(I)	
History - 7	01-Oct-22 12:00:00 AM	131386.2 kWh(I) Tot	32148.85 kVArh(Lg)-Wh(I)	1.85 kVArh(Ld)-Wh(I)	136388.8 kVAh-Wh(I)	
History - 8	01-Sep-22 12:00:00 AM	126995.1 kWh(I) Tot	31369.35 kVArh(Lg)-Wh(I)	1.8 kVArh(Ld)-Wh(I)	131915.75 kVAh-Wh(I)	
History - 9	01-Aug-22 12:00:00 AM	122604.75 kWh(I) Tot	30635.7 kVArh(Lg)-Wh(I)	0.85 kVArh(Ld)-Wh(I)	127449.25 kVAh-Wh(I)	
History - 10	01-Jul-22 12:00:00 AM	117916.1 kWh(I) Tot	29809.9 kVArh(Lg)-Wh(I)	0.75 kVArh(Ld)-Wh(I)	122672.3 kVAh-Wh(I)	
History - 11	01-Jun-22 12:00:00 AM	113026.15 kWh(I) Tot	28842.3 kVArh(Lg)-Wh(I)	0.7 kVArh(Ld)-Wh(I)	117668.15 kVAh-Wh(I)	
History - 12	01-May-22 12:00:00 AM	107932.95 kWh(I) Tot	27830.3 kVArh(Lg)-Wh(I)	0.6 kVArh(Ld)-Wh(I)	112457.8 kVAh-Wh(I)	

Main energy registers

History	Billing Dates	Active(I) Total	Reactive(I)-Active(I)	Reactive(E)-Active(I)	Apparent-Active(I) - type 2	2984955

History - 0	----	94484.45 kWh(I) Tot	97745.62 kVArh(Lg)-Wh(I)	0 kVArh(Ld)-Wh(I)	95645.75 kVAh-Wh(I)
History - 1	01-Apr-23 12:00:00 AM	93368.2 kWh(I) Tot	97574.07 kVArh(Lg)-Wh(I)	0 kVArh(Ld)-Wh(I)	94515.05 kVAh-Wh(I)
History - 2	01-Mar-23 12:00:00 AM	81977.65 kWh(I) Tot	95980.72 kVArh(Lg)-Wh(I)	0 kVArh(Ld)-Wh(I)	82999.2 kVAh-Wh(I)
History - 3	01-Feb-23 12:00:00 AM	72712.05 kWh(I) Tot	94639.02 kVArh(Lg)-Wh(I)	0 kVArh(Ld)-Wh(I)	73618.15 kVAh-Wh(I)
History - 4	01-Jan-23 12:00:00 AM	62889.1 kWh(I) Tot	93175.27 kVArh(Lg)-Wh(I)	0 kVArh(Ld)-Wh(I)	63659.65 kVAh-Wh(I)
History - 5	01-Dec-22 12:00:00 AM	53237.85 kWh(I) Tot	91827.82 kVArh(Lg)-Wh(I)	0 kVArh(Ld)-Wh(I)	53892 kVAh-Wh(I)
History - 6	01-Nov-22 12:00:00 AM	42935.6 kWh(I) Tot	90420.62 kVArh(Lg)-Wh(I)	0 kVArh(Ld)-Wh(I)	43476.85 kVAh-Wh(I)
History - 7	01-Oct-22 12:00:00 AM	30904.5 kWh(I) Tot	88668.17 kVArh(Lg)-Wh(I)	0 kVArh(Ld)-Wh(I)	31303.5 kVAh-Wh(I)
History - 8	01-Sep-22 12:00:00 AM	18216.55 kWh(I) Tot	86734.92 kVArh(Lg)-Wh(I)	0 kVArh(Ld)-Wh(I)	18454.5 kVAh-Wh(I)
History - 9	01-Aug-22 12:00:00 AM	5233.25 kWh(I) Tot	84707.22 kVArh(Lg)-Wh(I)	0 kVArh(Ld)-Wh(I)	5298.55 kVAh-Wh(I)
History - 10	01-Jul-22 12:00:00 AM	172057.85 kWh(I) Tot	24632.8 kVArh(Lg)-Wh(I)	0 kVArh(Ld)-Wh(I)	174032.15 kVAh-Wh(I)
History - 11	01-Jun-22 12:00:00 AM	158989.35 kWh(I) Tot	22603.95 kVArh(Lg)-Wh(I)	0 kVArh(Ld)-Wh(I)	160794.05 kVAh-Wh(I)
History - 12	01-May-22 12:00:00 AM	146182.65 kWh(I) Tot	20617.3 kVArh(Lg)-Wh(I)	0 kVArh(Ld)-Wh(I)	147821.75 kVAh-Wh(I)

Main energy registers

History	Billing Dates	Active(I) Total	Reactive(I)-Active(I)	Reactive(E)-Active(I)	Apparent-Active(I) - type 2	2984975
History - 0	----	138371.75 kWh(I) Tot	28560.35 kVArh(Lg)-Wh(I)	0 kVArh(Ld)-Wh(I)	141531.3 kVAh-Wh(I)	
History - 1	01-Apr-23 12:00:00 AM	138202.85 kWh(I) Tot	28525.15 kVArh(Lg)-Wh(I)	0 kVArh(Ld)-Wh(I)	141358.6 kVAh-Wh(I)	
History - 2	01-Mar-23 12:00:00 AM	132232.2 kWh(I) Tot	27281.2 kVArh(Lg)-Wh(I)	0 kVArh(Ld)-Wh(I)	135249.95 kVAh-Wh(I)	
History - 3	01-Feb-23 12:00:00 AM	127808 kWh(I) Tot	26367.7 kVArh(Lg)-Wh(I)	0 kVArh(Ld)-Wh(I)	130723.4 kVAh-Wh(I)	
History - 4	01-Jan-23 12:00:00 AM	123340.85 kWh(I) Tot	25403.25 kVArh(Lg)-Wh(I)	0 kVArh(Ld)-Wh(I)	126140.25 kVAh-Wh(I)	
History - 5	01-Dec-22 12:00:00 AM	118796.4 kWh(I) Tot	24383.3 kVArh(Lg)-Wh(I)	0 kVArh(Ld)-Wh(I)	121467.75 kVAh-Wh(I)	
History - 6	01-Nov-22 12:00:00 AM	113919.3 kWh(I) Tot	23368.1 kVArh(Lg)-Wh(I)	0 kVArh(Ld)-Wh(I)	116476.7 kVAh-Wh(I)	
History - 7	01-Oct-22 12:00:00 AM	107902.05 kWh(I) Tot	22191.25 kVArh(Lg)-Wh(I)	0 kVArh(Ld)-Wh(I)	110337.85 kVAh-Wh(I)	
History - 8	01-Sep-22 12:00:00 AM	101443.2 kWh(I) Tot	20967.9 kVArh(Lg)-Wh(I)	0 kVArh(Ld)-Wh(I)	103756.85 kVAh-Wh(I)	
History - 9	01-Aug-22 12:00:00 AM	94839 kWh(I) Tot	19723.75 kVArh(Lg)-Wh(I)	0 kVArh(Ld)-Wh(I)	97028.55 kVAh-Wh(I)	
History - 10	01-Jul-22 12:00:00 AM	87899.1 kWh(I) Tot	18331.6 kVArh(Lg)-Wh(I)	0 kVArh(Ld)-Wh(I)	89941.95 kVAh-Wh(I)	
History - 11	01-Jun-22 12:00:00 AM	80769.9 kWh(I) Tot	16837.95 kVArh(Lg)-Wh(I)	0 kVArh(Ld)-Wh(I)	82650.35 kVAh-Wh(I)	
History - 12	01-May-22 12:00:00 AM	73254.55 kWh(I) Tot	15200.3 kVArh(Lg)-Wh(I)	0 kVArh(Ld)-Wh(I)	74949.85 kVAh-Wh(I)	

Main energy registers

History	Billing Dates	Active(I) Total	Reactive(I)-Active(I)	Reactive(E)-Active(I)	Apparent-Active(I) - type 2	2984983
History - 0	----	103608.3 kWh(I) Tot	9223.35 kVArh(Lg)-Wh(I)	0 kVArh(Ld)-Wh(I)	104135.9 kVAh-Wh(I)	
History - 1	01-Apr-23 12:00:00 AM	103114.15 kWh(I) Tot	9169.3 kVArh(Lg)-Wh(I)	0 kVArh(Ld)-Wh(I)	103638.25 kVAh-Wh(I)	
History - 2	01-Mar-23 12:00:00 AM	99681.8 kWh(I) Tot	8836.6 kVArh(Lg)-Wh(I)	0 kVArh(Ld)-Wh(I)	100186.2 kVAh-Wh(I)	
History - 3	01-Feb-23 12:00:00 AM	97053.7 kWh(I) Tot	8565.8 kVArh(Lg)-Wh(I)	0 kVArh(Ld)-Wh(I)	97540.65 kVAh-Wh(I)	
History - 4	01-Jan-23 12:00:00 AM	94306.7 kWh(I) Tot	8291.1 kVArh(Lg)-Wh(I)	0 kVArh(Ld)-Wh(I)	94773.7 kVAh-Wh(I)	
History - 5	01-Dec-22 12:00:00 AM	91573.25 kWh(I) Tot	8053.75 kVArh(Lg)-Wh(I)	0 kVArh(Ld)-Wh(I)	92025.6 kVAh-Wh(I)	
History - 6	01-Nov-22 12:00:00 AM	88583.95 kWh(I) Tot	7785.6 kVArh(Lg)-Wh(I)	0 kVArh(Ld)-Wh(I)	89020.6 kVAh-Wh(I)	
History - 7	01-Oct-22 12:00:00 AM	85033.1 kWh(I) Tot	7433 kVArh(Lg)-Wh(I)	0 kVArh(Ld)-Wh(I)	85448.5 kVAh-Wh(I)	
History - 8	01-Sep-22 12:00:00 AM	81496.25 kWh(I) Tot	7071.5 kVArh(Lg)-Wh(I)	0 kVArh(Ld)-Wh(I)	81889.85 kVAh-Wh(I)	
History - 9	01-Aug-22 12:00:00 AM	78231.7 kWh(I) Tot	6774.55 kVArh(Lg)-Wh(I)	0 kVArh(Ld)-Wh(I)	78608.85 kVAh-Wh(I)	
History - 10	01-Jul-22 12:00:00 AM	74730.5 kWh(I) Tot	6432.6 kVArh(Lg)-Wh(I)	0 kVArh(Ld)-Wh(I)	75087.45 kVAh-Wh(I)	
History - 11	01-Jun-22 12:00:00 AM	71179.25 kWh(I) Tot	6076.7 kVArh(Lg)-Wh(I)	0 kVArh(Ld)-Wh(I)	71515.3 kVAh-Wh(I)	
History - 12	01-May-22 12:00:00 AM	67615.3 kWh(I) Tot	5722.5 kVArh(Lg)-Wh(I)	0 kVArh(Ld)-Wh(I)	67930.7 kVAh-Wh(I)	

Main energy registers

History	Billing Dates	Active(I) Total	Reactive(I)-Active(I)	Reactive(E)-Active(I)	Apparent-Active(I) - type 2	2984984

History - 0	----	35068.6 kWh(I) Tot	4102.2 kVArh(Lg)-Wh(I)	0 kVArh(Ld)-Wh(I)	35370.6 kVAh-Wh(I)
History - 1	01-Apr-23 12:00:00 AM	34884 kWh(I) Tot	4076 kVArh(Lg)-Wh(I)	0 kVArh(Ld)-Wh(I)	35183.85 kVAh-Wh(I)
History - 2	01-Mar-23 12:00:00 AM	33810.5 kWh(I) Tot	3927.7 kVArh(Lg)-Wh(I)	0 kVArh(Ld)-Wh(I)	34098.15 kVAh-Wh(I)
History - 3	01-Feb-23 12:00:00 AM	32906.05 kWh(I) Tot	3819.6 kVArh(Lg)-Wh(I)	0 kVArh(Ld)-Wh(I)	33185.55 kVAh-Wh(I)
History - 4	01-Jan-23 12:00:00 AM	31976.45 kWh(I) Tot	3721.05 kVArh(Lg)-Wh(I)	0 kVArh(Ld)-Wh(I)	32248.6 kVAh-Wh(I)
History - 5	01-Dec-22 12:00:00 AM	31075.55 kWh(I) Tot	3619.55 kVArh(Lg)-Wh(I)	0 kVArh(Ld)-Wh(I)	31339.8 kVAh-Wh(I)
History - 6	01-Nov-22 12:00:00 AM	30126 kWh(I) Tot	3508.4 kVArh(Lg)-Wh(I)	0 kVArh(Ld)-Wh(I)	30381.6 kVAh-Wh(I)
History - 7	01-Oct-22 12:00:00 AM	28905.5 kWh(I) Tot	3369.5 kVArh(Lg)-Wh(I)	0 kVArh(Ld)-Wh(I)	29151.4 kVAh-Wh(I)
History - 8	01-Sep-22 12:00:00 AM	27651.85 kWh(I) Tot	3229.2 kVArh(Lg)-Wh(I)	0 kVArh(Ld)-Wh(I)	27888.45 kVAh-Wh(I)
History - 9	01-Aug-22 12:00:00 AM	26299 kWh(I) Tot	3069.4 kVArh(Lg)-Wh(I)	0 kVArh(Ld)-Wh(I)	26524.35 kVAh-Wh(I)
History - 10	01-Jul-22 12:00:00 AM	24884.3 kWh(I) Tot	2885.25 kVArh(Lg)-Wh(I)	0 kVArh(Ld)-Wh(I)	25095.8 kVAh-Wh(I)
History - 11	01-Jun-22 12:00:00 AM	23560.65 kWh(I) Tot	2705.7 kVArh(Lg)-Wh(I)	0 kVArh(Ld)-Wh(I)	23758.35 kVAh-Wh(I)
History - 12	01-May-22 12:00:00 AM	22093 kWh(I) Tot	2492.15 kVArh(Lg)-Wh(I)	0 kVArh(Ld)-Wh(I)	22273.45 kVAh-Wh(I)

Main energy registers

History	Billing Dates	Active(I) Total	Reactive(I)-Active(I)	Reactive(E)-Active(I)	Apparent-Active(I) - type 2	2985003
History - 0	----	258662.5 kWh(I) Tot	40800.25 kVArh(Lg)-Wh(I)	3.6 kVArh(Ld)-Wh(I)	262527.25 kVAh-Wh(I)	
History - 1	01-Apr-23 12:00:00 AM	257210.1 kWh(I) Tot	40571.15 kVArh(Lg)-Wh(I)	3.6 kVArh(Ld)-Wh(I)	261053.9 kVAh-Wh(I)	
History - 2	01-Mar-23 12:00:00 AM	245557.15 kWh(I) Tot	38762.45 kVArh(Lg)-Wh(I)	3.6 kVArh(Ld)-Wh(I)	249237.4 kVAh-Wh(I)	
History - 3	01-Feb-23 12:00:00 AM	235973.95 kWh(I) Tot	37114.45 kVArh(Lg)-Wh(I)	3.6 kVArh(Ld)-Wh(I)	239477.75 kVAh-Wh(I)	
History - 4	01-Jan-23 12:00:00 AM	226536.15 kWh(I) Tot	35013.2 kVArh(Lg)-Wh(I)	3.6 kVArh(Ld)-Wh(I)	229738.5 kVAh-Wh(I)	
History - 5	01-Dec-22 12:00:00 AM	216950.6 kWh(I) Tot	33479.85 kVArh(Lg)-Wh(I)	3.6 kVArh(Ld)-Wh(I)	219992.25 kVAh-Wh(I)	
History - 6	01-Nov-22 12:00:00 AM	207344.7 kWh(I) Tot	32135.45 kVArh(Lg)-Wh(I)	3.6 kVArh(Ld)-Wh(I)	210268.85 kVAh-Wh(I)	
History - 7	01-Oct-22 12:00:00 AM	195199.6 kWh(I) Tot	30380.85 kVArh(Lg)-Wh(I)	3.6 kVArh(Ld)-Wh(I)	197978.35 kVAh-Wh(I)	
History - 8	01-Sep-22 12:00:00 AM	181448.15 kWh(I) Tot	28072.85 kVArh(Lg)-Wh(I)	3.6 kVArh(Ld)-Wh(I)	184001.55 kVAh-Wh(I)	
History - 9	01-Aug-22 12:00:00 AM	167999.3 kWh(I) Tot	26031.95 kVArh(Lg)-Wh(I)	3.05 kVArh(Ld)-Wh(I)	170378.65 kVAh-Wh(I)	
History - 10	01-Jul-22 12:00:00 AM	153517.1 kWh(I) Tot	23743.05 kVArh(Lg)-Wh(I)	3.05 kVArh(Ld)-Wh(I)	155696.55 kVAh-Wh(I)	
History - 11	01-Jun-22 12:00:00 AM	138942.7 kWh(I) Tot	21210.35 kVArh(Lg)-Wh(I)	3.05 kVArh(Ld)-Wh(I)	140884.3 kVAh-Wh(I)	
History - 12	01-May-22 12:00:00 AM	120279.6 kWh(I) Tot	17907 kVArh(Lg)-Wh(I)	3.05 kVArh(Ld)-Wh(I)	121909.4 kVAh-Wh(I)	

Main energy registers

History	Billing Dates	Active(I) Total	Reactive(I)-Active(I)	Reactive(E)-Active(I)	Apparent-Active(I) - type 2	2985013
History - 0	----	391365.25 kWh(I) Tot	98577.9 kVArh(Lg)-Wh(I)	0 kVArh(Ld)-Wh(I)	404914.5 kVAh-Wh(I)	
History - 1	01-Apr-23 12:00:00 AM	389955.8 kWh(I) Tot	98198.45 kVArh(Lg)-Wh(I)	0 kVArh(Ld)-Wh(I)	403451.55 kVAh-Wh(I)	
History - 2	01-Mar-23 12:00:00 AM	380534.6 kWh(I) Tot	95693.95 kVArh(Lg)-Wh(I)	0 kVArh(Ld)-Wh(I)	393679.4 kVAh-Wh(I)	
History - 3	01-Feb-23 12:00:00 AM	372871.15 kWh(I) Tot	93443.05 kVArh(Lg)-Wh(I)	0 kVArh(Ld)-Wh(I)	385660.75 kVAh-Wh(I)	
History - 4	01-Jan-23 12:00:00 AM	364973.65 kWh(I) Tot	91329.65 kVArh(Lg)-Wh(I)	0 kVArh(Ld)-Wh(I)	377438.3 kVAh-Wh(I)	
History - 5	01-Dec-22 12:00:00 AM	357062.8 kWh(I) Tot	89058.4 kVArh(Lg)-Wh(I)	0 kVArh(Ld)-Wh(I)	369143.5 kVAh-Wh(I)	
History - 6	01-Nov-22 12:00:00 AM	348290.45 kWh(I) Tot	86531.7 kVArh(Lg)-Wh(I)	0 kVArh(Ld)-Wh(I)	359971.35 kVAh-Wh(I)	
History - 7	01-Oct-22 12:00:00 AM	338297.7 kWh(I) Tot	84048.6 kVArh(Lg)-Wh(I)	0 kVArh(Ld)-Wh(I)	349647.85 kVAh-Wh(I)	
History - 8	01-Sep-22 12:00:00 AM	327757.65 kWh(I) Tot	81395.7 kVArh(Lg)-Wh(I)	0 kVArh(Ld)-Wh(I)	338760 kVAh-Wh(I)	
History - 9	01-Aug-22 12:00:00 AM	316895.25 kWh(I) Tot	78589.45 kVArh(Lg)-Wh(I)	0 kVArh(Ld)-Wh(I)	327518.75 kVAh-Wh(I)	
History - 10	01-Jul-22 12:00:00 AM	305590.5 kWh(I) Tot	75582.5 kVArh(Lg)-Wh(I)	0 kVArh(Ld)-Wh(I)	315797.9 kVAh-Wh(I)	
History - 11	01-Jun-22 12:00:00 AM	294317.3 kWh(I) Tot	72771.6 kVArh(Lg)-Wh(I)	0 kVArh(Ld)-Wh(I)	304163.35 kVAh-Wh(I)	
History - 12	01-May-22 12:00:00 AM	283156.45 kWh(I) Tot	69788.55 kVArh(Lg)-Wh(I)	0 kVArh(Ld)-Wh(I)	292595.9 kVAh-Wh(I)	

Main energy registers

History	Billing Dates	Active(I) Total	Reactive(I)-Active(I)	Reactive(E)-Active(I)	Apparent-Active(I) - type 2	2985017

History - 0	----	317797.3 kWh(I) Tot	43896.1 kVArh(Lg)-Wh(I)	0 kVArh(Ld)-Wh(I)	321404.5 kVAh-Wh(I)
History - 1	01-Apr-23 12:00:00 AM	316781.6 kWh(I) Tot	43766.45 kVArh(Lg)-Wh(I)	0 kVArh(Ld)-Wh(I)	320378.85 kVAh-Wh(I)
History - 2	01-Mar-23 12:00:00 AM	304125.9 kWh(I) Tot	42116.7 kVArh(Lg)-Wh(I)	0 kVArh(Ld)-Wh(I)	307594.75 kVAh-Wh(I)
History - 3	01-Feb-23 12:00:00 AM	292866.9 kWh(I) Tot	40495.65 kVArh(Lg)-Wh(I)	0 kVArh(Ld)-Wh(I)	296195.6 kVAh-Wh(I)
History - 4	01-Jan-23 12:00:00 AM	280873.4 kWh(I) Tot	38939.85 kVArh(Lg)-Wh(I)	0 kVArh(Ld)-Wh(I)	284072.8 kVAh-Wh(I)
History - 5	01-Dec-22 12:00:00 AM	269276.65 kWh(I) Tot	37430.85 kVArh(Lg)-Wh(I)	0 kVArh(Ld)-Wh(I)	272345.55 kVAh-Wh(I)
History - 6	01-Nov-22 12:00:00 AM	257561.4 kWh(I) Tot	35887.25 kVArh(Lg)-Wh(I)	0 kVArh(Ld)-Wh(I)	260499.6 kVAh-Wh(I)
History - 7	01-Oct-22 12:00:00 AM	244311.05 kWh(I) Tot	34228.75 kVArh(Lg)-Wh(I)	0 kVArh(Ld)-Wh(I)	247123.1 kVAh-Wh(I)
History - 8	01-Sep-22 12:00:00 AM	230666.05 kWh(I) Tot	32457.15 kVArh(Lg)-Wh(I)	0 kVArh(Ld)-Wh(I)	233343.65 kVAh-Wh(I)
History - 9	01-Aug-22 12:00:00 AM	216465.75 kWh(I) Tot	30548.7 kVArh(Lg)-Wh(I)	0 kVArh(Ld)-Wh(I)	218993.1 kVAh-Wh(I)
History - 10	01-Jul-22 12:00:00 AM	201709.95 kWh(I) Tot	28435 kVArh(Lg)-Wh(I)	0 kVArh(Ld)-Wh(I)	204062.75 kVAh-Wh(I)
History - 11	01-Jun-22 12:00:00 AM	186856.35 kWh(I) Tot	26192.1 kVArh(Lg)-Wh(I)	0 kVArh(Ld)-Wh(I)	189020.8 kVAh-Wh(I)
History - 12	01-May-22 12:00:00 AM	172104.05 kWh(I) Tot	23847.15 kVArh(Lg)-Wh(I)	0 kVArh(Ld)-Wh(I)	174065 kVAh-Wh(I)

Main energy registers

History	Billing Dates	Active(I) Total	Reactive(I)-Active(I)	Reactive(E)-Active(I)	Apparent-Active(I) - type 2	2985020
History - 0	----	300066.35 kWh(I) Tot	47156.5 kVArh(Lg)-Wh(I)	0 kVArh(Ld)-Wh(I)	304532.95 kVAh-Wh(I)	
History - 1	01-Apr-23 12:00:00 AM	299097.95 kWh(I) Tot	47013 kVArh(Lg)-Wh(I)	0 kVArh(Ld)-Wh(I)	303552.1 kVAh-Wh(I)	
History - 2	01-Mar-23 12:00:00 AM	287140.7 kWh(I) Tot	44981.95 kVArh(Lg)-Wh(I)	0 kVArh(Ld)-Wh(I)	291395.85 kVAh-Wh(I)	
History - 3	01-Feb-23 12:00:00 AM	276853.75 kWh(I) Tot	43108.6 kVArh(Lg)-Wh(I)	0 kVArh(Ld)-Wh(I)	280907.35 kVAh-Wh(I)	
History - 4	01-Jan-23 12:00:00 AM	265675.35 kWh(I) Tot	41128.85 kVArh(Lg)-Wh(I)	0 kVArh(Ld)-Wh(I)	269508.4 kVAh-Wh(I)	
History - 5	01-Dec-22 12:00:00 AM	254880.25 kWh(I) Tot	39315.9 kVArh(Lg)-Wh(I)	0 kVArh(Ld)-Wh(I)	258506.75 kVAh-Wh(I)	
History - 6	01-Nov-22 12:00:00 AM	244083.05 kWh(I) Tot	37497.4 kVArh(Lg)-Wh(I)	0 kVArh(Ld)-Wh(I)	247521 kVAh-Wh(I)	
History - 7	01-Oct-22 12:00:00 AM	231597 kWh(I) Tot	35601 kVArh(Lg)-Wh(I)	0 kVArh(Ld)-Wh(I)	234864.1 kVAh-Wh(I)	
History - 8	01-Sep-22 12:00:00 AM	218656.35 kWh(I) Tot	33679.05 kVArh(Lg)-Wh(I)	0 kVArh(Ld)-Wh(I)	221757.65 kVAh-Wh(I)	
History - 9	01-Aug-22 12:00:00 AM	205033.7 kWh(I) Tot	31541.15 kVArh(Lg)-Wh(I)	0 kVArh(Ld)-Wh(I)	207942.65 kVAh-Wh(I)	
History - 10	01-Jul-22 12:00:00 AM	191383.75 kWh(I) Tot	29174.75 kVArh(Lg)-Wh(I)	0 kVArh(Ld)-Wh(I)	194058.9 kVAh-Wh(I)	
History - 11	01-Jun-22 12:00:00 AM	178198.65 kWh(I) Tot	26873.9 kVArh(Lg)-Wh(I)	0 kVArh(Ld)-Wh(I)	180652.15 kVAh-Wh(I)	
History - 12	01-May-22 12:00:00 AM	164767.8 kWh(I) Tot	24412.65 kVArh(Lg)-Wh(I)	0 kVArh(Ld)-Wh(I)	166973.6 kVAh-Wh(I)	

Main energy registers

History	Billing Dates	Active(I) Total	Reactive(I)-Active(I)	Reactive(E)-Active(I)	Apparent-Active(I) - type 2	2985051
History - 0	----	43751.75 kWh(I) Tot	10651.85 kVArh(Lg)-Wh(I)	1.95 kVArh(Ld)-Wh(I)	45231.35 kVAh-Wh(I)	
History - 1	01-Apr-23 12:00:00 AM	43520.2 kWh(I) Tot	10601.3 kVArh(Lg)-Wh(I)	1.95 kVArh(Ld)-Wh(I)	44993.4 kVAh-Wh(I)	
History - 2	01-Mar-23 12:00:00 AM	41889 kWh(I) Tot	10151.8 kVArh(Lg)-Wh(I)	1.95 kVArh(Ld)-Wh(I)	43294.9 kVAh-Wh(I)	
History - 3	01-Feb-23 12:00:00 AM	40436 kWh(I) Tot	9676.4 kVArh(Lg)-Wh(I)	1.95 kVArh(Ld)-Wh(I)	41760.9 kVAh-Wh(I)	
History - 4	01-Jan-23 12:00:00 AM	38922.45 kWh(I) Tot	9209.9 kVArh(Lg)-Wh(I)	1.95 kVArh(Ld)-Wh(I)	40170.95 kVAh-Wh(I)	
History - 5	01-Dec-22 12:00:00 AM	37637.45 kWh(I) Tot	8874.05 kVArh(Lg)-Wh(I)	1.95 kVArh(Ld)-Wh(I)	38837.3 kVAh-Wh(I)	
History - 6	01-Nov-22 12:00:00 AM	36387.25 kWh(I) Tot	8571.3 kVArh(Lg)-Wh(I)	1.95 kVArh(Ld)-Wh(I)	37547.1 kVAh-Wh(I)	
History - 7	01-Oct-22 12:00:00 AM	34963.55 kWh(I) Tot	8283.9 kVArh(Lg)-Wh(I)	1.95 kVArh(Ld)-Wh(I)	36091.45 kVAh-Wh(I)	
History - 8	01-Sep-22 12:00:00 AM	33474.05 kWh(I) Tot	7979.9 kVArh(Lg)-Wh(I)	1.95 kVArh(Ld)-Wh(I)	34568.6 kVAh-Wh(I)	
History - 9	01-Aug-22 12:00:00 AM	31951.65 kWh(I) Tot	7673.35 kVArh(Lg)-Wh(I)	1.95 kVArh(Ld)-Wh(I)	33012.75 kVAh-Wh(I)	
History - 10	01-Jul-22 12:00:00 AM	30372.25 kWh(I) Tot	7336.4 kVArh(Lg)-Wh(I)	1.95 kVArh(Ld)-Wh(I)	31394.35 kVAh-Wh(I)	
History - 11	01-Jun-22 12:00:00 AM	28595.5 kWh(I) Tot	6909.95 kVArh(Lg)-Wh(I)	1.95 kVArh(Ld)-Wh(I)	29563.25 kVAh-Wh(I)	
History - 12	01-May-22 12:00:00 AM	26701.65 kWh(I) Tot	6442.35 kVArh(Lg)-Wh(I)	1.95 kVArh(Ld)-Wh(I)	27608.6 kVAh-Wh(I)	

Main energy registers

History	Billing Dates	Active(I) Total	Reactive(I)-Active(I)	Reactive(E)-Active(I)	Apparent-Active(I) - type 2	2985072

History - 0	----	431628.7 kWh(I) Tot	83416.25 kVArh(Lg)-Wh(I)	0 kVArh(Ld)-Wh(I)	440550.6 kVAh-Wh(I)
History - 1	01-Apr-23 12:00:00 AM	430556.45 kWh(I) Tot	83187 kVArh(Lg)-Wh(I)	0 kVArh(Ld)-Wh(I)	439452.3 kVAh-Wh(I)
History - 2	01-Mar-23 12:00:00 AM	421236.45 kWh(I) Tot	81208.9 kVArh(Lg)-Wh(I)	0 kVArh(Ld)-Wh(I)	429905.15 kVAh-Wh(I)
History - 3	01-Feb-23 12:00:00 AM	413687.6 kWh(I) Tot	79452 kVArh(Lg)-Wh(I)	0 kVArh(Ld)-Wh(I)	422126.1 kVAh-Wh(I)
History - 4	01-Jan-23 12:00:00 AM	405798.7 kWh(I) Tot	77451.85 kVArh(Lg)-Wh(I)	0 kVArh(Ld)-Wh(I)	413935.1 kVAh-Wh(I)
History - 5	01-Dec-22 12:00:00 AM	397406.15 kWh(I) Tot	75106.05 kVArh(Lg)-Wh(I)	0 kVArh(Ld)-Wh(I)	405164.05 kVAh-Wh(I)
History - 6	01-Nov-22 12:00:00 AM	388315.85 kWh(I) Tot	72655.7 kVArh(Lg)-Wh(I)	0 kVArh(Ld)-Wh(I)	395708.75 kVAh-Wh(I)
History - 7	01-Oct-22 12:00:00 AM	377790.05 kWh(I) Tot	70011.15 kVArh(Lg)-Wh(I)	0 kVArh(Ld)-Wh(I)	384831.95 kVAh-Wh(I)
History - 8	01-Sep-22 12:00:00 AM	366742.75 kWh(I) Tot	67326.05 kVArh(Lg)-Wh(I)	0 kVArh(Ld)-Wh(I)	373442.1 kVAh-Wh(I)
History - 9	01-Aug-22 12:00:00 AM	355795.25 kWh(I) Tot	64798.5 kVArh(Lg)-Wh(I)	0 kVArh(Ld)-Wh(I)	362186.95 kVAh-Wh(I)
History - 10	01-Jul-22 12:00:00 AM	337828.4 kWh(I) Tot	61075.55 kVArh(Lg)-Wh(I)	0 kVArh(Ld)-Wh(I)	343814.85 kVAh-Wh(I)
History - 11	01-Jun-22 12:00:00 AM	326742.15 kWh(I) Tot	58658 kVArh(Lg)-Wh(I)	0 kVArh(Ld)-Wh(I)	332454.35 kVAh-Wh(I)
History - 12	01-May-22 12:00:00 AM	308188.85 kWh(I) Tot	55103.45 kVArh(Lg)-Wh(I)	0 kVArh(Ld)-Wh(I)	313543.4 kVAh-Wh(I)

Main energy registers

History	Billing Dates	Active(I) Total	Reactive(I)-Active(I)	Reactive(E)-Active(I)	Apparent-Active(I) - type 2	2985094
History - 0	----	86521.4 kWh(I) Tot	11323.65 kVArh(Lg)-Wh(I)	1140.65 kVArh(Ld)-Wh(I)	88007.95 kVAh-Wh(I)	
History - 1	01-Apr-23 12:00:00 AM	86165.35 kWh(I) Tot	11296.9 kVArh(Lg)-Wh(I)	1140.65 kVArh(Ld)-Wh(I)	87650.6 kVAh-Wh(I)	
History - 2	01-Mar-23 12:00:00 AM	83263.65 kWh(I) Tot	11061.35 kVArh(Lg)-Wh(I)	1140.65 kVArh(Ld)-Wh(I)	84735.3 kVAh-Wh(I)	
History - 3	01-Jul-22 12:00:00 AM	81395.75 kWh(I) Tot	10846.25 kVArh(Lg)-Wh(I)	1140.65 kVArh(Ld)-Wh(I)	82849.8 kVAh-Wh(I)	
History - 4	01-Jun-22 12:00:00 AM	80830.05 kWh(I) Tot	10846.25 kVArh(Lg)-Wh(I)	486.65 kVArh(Ld)-Wh(I)	81911.9 kVAh-Wh(I)	
History - 5	01-May-22 12:00:00 AM	78711.1 kWh(I) Tot	10718.8 kVArh(Lg)-Wh(I)	79.35 kVArh(Ld)-Wh(I)	79616.05 kVAh-Wh(I)	
History - 6	01-Apr-22 12:00:00 AM	70363.3 kWh(I) Tot	9442.8 kVArh(Lg)-Wh(I)	76.7 kVArh(Ld)-Wh(I)	71151 kVAh-Wh(I)	
History - 7	01-Mar-22 12:00:00 AM	68381.35 kWh(I) Tot	9403.25 kVArh(Lg)-Wh(I)	68.2 kVArh(Ld)-Wh(I)	69166.7 kVAh-Wh(I)	
History - 8	01-Feb-22 12:00:00 AM	66829.4 kWh(I) Tot	9382.65 kVArh(Lg)-Wh(I)	49.7 kVArh(Ld)-Wh(I)	67612.75 kVAh-Wh(I)	
History - 9	01-Jan-22 12:00:00 AM	65134.2 kWh(I) Tot	9347.45 kVArh(Lg)-Wh(I)	30.55 kVArh(Ld)-Wh(I)	65914.85 kVAh-Wh(I)	
History - 10	01-Dec-21 12:00:00 AM	63341.85 kWh(I) Tot	9306.05 kVArh(Lg)-Wh(I)	11.95 kVArh(Ld)-Wh(I)	64119.65 kVAh-Wh(I)	
History - 11	01-Nov-21 12:00:00 AM	61452.9 kWh(I) Tot	9252.75 kVArh(Lg)-Wh(I)	3.6 kVArh(Ld)-Wh(I)	62227.8 kVAh-Wh(I)	
History - 12	01-Oct-21 12:00:00 AM	59315.55 kWh(I) Tot	9167.95 kVArh(Lg)-Wh(I)	1.75 kVArh(Ld)-Wh(I)	60086.55 kVAh-Wh(I)	

Main energy registers

History	Billing Dates	Active(I) Total	Reactive(I)-Active(I)	Reactive(E)-Active(I)	Apparent-Active(I) - type 2	2985123
History - 0	----	35381.8 kWh(I) Tot	9811.8 kVArh(Lg)-Wh(I)	0 kVArh(Ld)-Wh(I)	36842.65 kVAh-Wh(I)	
History - 1	01-Apr-23 12:00:00 AM	35071.55 kWh(I) Tot	9732.8 kVArh(Lg)-Wh(I)	0 kVArh(Ld)-Wh(I)	36521.85 kVAh-Wh(I)	
History - 2	01-Mar-23 12:00:00 AM	33479.2 kWh(I) Tot	9319.1 kVArh(Lg)-Wh(I)	0 kVArh(Ld)-Wh(I)	34872.3 kVAh-Wh(I)	
History - 3	01-Feb-23 12:00:00 AM	32205.5 kWh(I) Tot	8929.15 kVArh(Lg)-Wh(I)	0 kVArh(Ld)-Wh(I)	33535 kVAh-Wh(I)	
History - 4	01-Jan-23 12:00:00 AM	30856.25 kWh(I) Tot	8536.4 kVArh(Lg)-Wh(I)	0 kVArh(Ld)-Wh(I)	32122.5 kVAh-Wh(I)	
History - 5	01-Dec-22 12:00:00 AM	29936.85 kWh(I) Tot	8260.2 kVArh(Lg)-Wh(I)	0 kVArh(Ld)-Wh(I)	31157.15 kVAh-Wh(I)	
History - 6	01-Nov-22 12:00:00 AM	28904.8 kWh(I) Tot	7956.2 kVArh(Lg)-Wh(I)	0 kVArh(Ld)-Wh(I)	30077.4 kVAh-Wh(I)	
History - 7	17-Oct-22 01:36:00 PM	28295.2 kWh(I) Tot	7775.1 kVArh(Lg)-Wh(I)	0 kVArh(Ld)-Wh(I)	29439.5 kVAh-Wh(I)	
History - 8	16-Oct-22 01:08:00 PM	28295.2 kWh(I) Tot	7775.1 kVArh(Lg)-Wh(I)	0 kVArh(Ld)-Wh(I)	29439.5 kVAh-Wh(I)	
History - 9	01-Oct-22 12:00:00 AM	28118.4 kWh(I) Tot	7725.8 kVArh(Lg)-Wh(I)	0 kVArh(Ld)-Wh(I)	29255.6 kVAh-Wh(I)	
History - 10	01-Sep-22 12:00:00 AM	26737.9 kWh(I) Tot	7343.45 kVArh(Lg)-Wh(I)	0 kVArh(Ld)-Wh(I)	27819.95 kVAh-Wh(I)	
History - 11	01-Aug-22 12:00:00 AM	25353.25 kWh(I) Tot	6937.45 kVArh(Lg)-Wh(I)	0 kVArh(Ld)-Wh(I)	26372.45 kVAh-Wh(I)	
History - 12	01-Jul-22 12:00:00 AM	23803.9 kWh(I) Tot	6438.35 kVArh(Lg)-Wh(I)	0 kVArh(Ld)-Wh(I)	24740.6 kVAh-Wh(I)	

Main energy registers

History	Billing Dates	Active(I) Total	Reactive(I)-Active(I)	Reactive(E)-Active(I)	Apparent-Active(I) - type 2	2985126

History - 0	----	18909.05 kWh(I) Tot	3756 kVArh(Lg)-Wh(I)	0 kVArh(Ld)-Wh(I)	19337 kVAh-Wh(I)
History - 1	01-Apr-23 12:00:00 AM	18731 kWh(I) Tot	3724.95 kVArh(Lg)-Wh(I)	0 kVArh(Ld)-Wh(I)	19156 kVAh-Wh(I)
History - 2	01-Mar-23 12:00:00 AM	17775.55 kWh(I) Tot	3541.15 kVArh(Lg)-Wh(I)	0 kVArh(Ld)-Wh(I)	18181.35 kVAh-Wh(I)
History - 3	01-Feb-23 12:00:00 AM	16988.45 kWh(I) Tot	3364.75 kVArh(Lg)-Wh(I)	0 kVArh(Ld)-Wh(I)	17371.4 kVAh-Wh(I)
History - 4	01-Jan-23 12:00:00 AM	16194.5 kWh(I) Tot	3129.05 kVArh(Lg)-Wh(I)	0 kVArh(Ld)-Wh(I)	16536.3 kVAh-Wh(I)
History - 5	01-Dec-22 12:00:00 AM	15542.75 kWh(I) Tot	2975.5 kVArh(Lg)-Wh(I)	0 kVArh(Ld)-Wh(I)	15862.1 kVAh-Wh(I)
History - 6	01-Nov-22 12:00:00 AM	14875.5 kWh(I) Tot	2828.15 kVArh(Lg)-Wh(I)	0 kVArh(Ld)-Wh(I)	15176 kVAh-Wh(I)
History - 7	01-Oct-22 12:00:00 AM	14042.45 kWh(I) Tot	2640.9 kVArh(Lg)-Wh(I)	0 kVArh(Ld)-Wh(I)	14320.35 kVAh-Wh(I)
History - 8	01-Sep-22 12:00:00 AM	13195.55 kWh(I) Tot	2466.65 kVArh(Lg)-Wh(I)	0 kVArh(Ld)-Wh(I)	13454.35 kVAh-Wh(I)
History - 9	01-Aug-22 12:00:00 AM	12293.85 kWh(I) Tot	2258.2 kVArh(Lg)-Wh(I)	0 kVArh(Ld)-Wh(I)	12527 kVAh-Wh(I)
History - 10	01-Jul-22 12:00:00 AM	11362.95 kWh(I) Tot	2052.1 kVArh(Lg)-Wh(I)	0 kVArh(Ld)-Wh(I)	11571.9 kVAh-Wh(I)
History - 11	01-Jun-22 12:00:00 AM	10359.4 kWh(I) Tot	1847.9 kVArh(Lg)-Wh(I)	0 kVArh(Ld)-Wh(I)	10546.2 kVAh-Wh(I)
History - 12	01-May-22 12:00:00 AM	9286.25 kWh(I) Tot	1638.65 kVArh(Lg)-Wh(I)	0 kVArh(Ld)-Wh(I)	9451.5 kVAh-Wh(I)

Main energy registers

History	Billing Dates	Abs Active Total	Abs Reactive(Lag)	Abs Reactive(Lead)	Abs Apparent	Abs Active X0273103
History - 0	----	16720040 kWh Abs	3488080 kVArh+ Abs	140 kVArh- Abs	17131460 kVAh Abs	16721940 kWh Abs
History - 1	01-Apr-23 12:00:00 AM	16688200 kWh Abs	3480620 kVArh+ Abs	140 kVArh- Abs	17098700 kVAh Abs	16690120 kWh Abs
History - 2	01-Mar-23 12:00:00 AM	16295900 kWh Abs	3380800 kVArh+ Abs	140 kVArh- Abs	16693040 kVAh Abs	16297780 kWh Abs
History - 3	01-Feb-23 12:00:00 AM	15963620 kWh Abs	3296360 kVArh+ Abs	120 kVArh- Abs	16348600 kVAh Abs	15965520 kWh Abs
History - 4	01-Jan-23 12:00:00 AM	15632020 kWh Abs	3198560 kVArh+ Abs	0 kVArh- Abs	16000580 kVAh Abs	15633840 kWh Abs
History - 5	01-Dec-22 12:00:00 AM	15350160 kWh Abs	3119740 kVArh+ Abs	0 kVArh- Abs	15705360 kVAh Abs	15351800 kWh Abs
History - 6	01-Nov-22 12:00:00 AM	15066300 kWh Abs	3045020 kVArh+ Abs	0 kVArh- Abs	15410220 kVAh Abs	15067760 kWh Abs
History - 7	01-Oct-22 12:00:00 AM	14737080 kWh Abs	2974620 kVArh+ Abs	0 kVArh- Abs	15072620 kVAh Abs	14738420 kWh Abs
History - 8	01-Sep-22 12:00:00 AM	14364540 kWh Abs	2896940 kVArh+ Abs	0 kVArh- Abs	14691540 kVAh Abs	14365840 kWh Abs
History - 9	01-Aug-22 12:00:00 AM	13991160 kWh Abs	2814400 kVArh+ Abs	0 kVArh- Abs	14308540 kVAh Abs	13992400 kWh Abs
History - 10	01-Jul-22 12:00:00 AM	13603080 kWh Abs	2723760 kVArh+ Abs	0 kVArh- Abs	13909440 kVAh Abs	13604240 kWh Abs
History - 11	01-Jun-22 12:00:00 AM	13213140 kWh Abs	2632540 kVArh+ Abs	0 kVArh- Abs	13508480 kVAh Abs	13214280 kWh Abs
History - 12	01-May-22 12:00:00 AM	12789260 kWh Abs	2526280 kVArh+ Abs	0 kVArh- Abs	13070720 kVAh Abs	12790380 kWh Abs

Main energy registers

History	Billing Dates	Abs Active Total	Abs Reactive(Lag)	Abs Reactive(Lead)	Abs Apparent	Abs Active XC456818
History - 0	----	35.195 kWh Abs	9.193 kVArh+ Abs	0.239 kVArh- Abs	36.5475 kVAh Abs	35.1775 kWh Abs
History - 1	01-Apr-23 12:00:00 AM	33.9555 kWh Abs	8.901 kVArh+ Abs	0.239 kVArh- Abs	35.269 kVAh Abs	33.939 kWh Abs
History - 2	01-Mar-23 12:00:00 AM	23.276 kWh Abs	6.005 kVArh+ Abs	0.2385 kVArh- Abs	24.198 kVAh Abs	23.2655 kWh Abs
History - 3	01-Feb-23 12:00:00 AM	14.6255 kWh Abs	3.4465 kVArh+ Abs	0.2385 kVArh- Abs	15.169 kVAh Abs	14.6195 kWh Abs
History - 4	01-Jan-23 12:00:00 AM	5.8935 kWh Abs	0.75 kVArh+ Abs	0.2385 kVArh- Abs	6.022 kVAh Abs	5.8915 kWh Abs
History - 5	01-Dec-22 12:00:00 AM	0.0595 kWh Abs	0.013 kVArh+ Abs	0.0115 kVArh- Abs	0.069 kVAh Abs	0.0595 kWh Abs
History - 6	01-Nov-22 12:00:00 AM	0.0575 kWh Abs	0.0125 kVArh+ Abs	0.011 kVArh- Abs	0.0665 kVAh Abs	0.0575 kWh Abs
History - 7	01-Jun-22 12:00:00 AM	0.0575 kWh Abs	0.0125 kVArh+ Abs	0.011 kVArh- Abs	0.0665 kVAh Abs	0.0575 kWh Abs
History - 8	01-Mar-21 12:00:00 AM	0.0575 kWh Abs	0.0125 kVArh+ Abs	0.011 kVArh- Abs	0.0665 kVAh Abs	0.0575 kWh Abs
History - 9	01-Feb-21 12:00:00 AM	0.057 kWh Abs	0.0125 kVArh+ Abs	0.0105 kVArh- Abs	0.0655 kVAh Abs	0.057 kWh Abs
History - 10	01-Jan-21 12:00:00 AM	0.056 kWh Abs	0.012 kVArh+ Abs	0.0105 kVArh- Abs	0.0645 kVAh Abs	0.056 kWh Abs
History - 11	01-Dec-20 12:00:00 AM	0.0555 kWh Abs	0.012 kVArh+ Abs	0.0105 kVArh- Abs	0.064 kVAh Abs	0.0555 kWh Abs
History - 12	01-Nov-20 12:00:00 AM	0.054 kWh Abs	0.0115 kVArh+ Abs	0.01 kVArh- Abs	0.062 kVAh Abs	0.054 kWh Abs

Main energy registers

History	Billing Dates	Abs Active Total	Abs Reactive(Lag)	Abs Reactive(Lead)	Abs Apparent	Abs Active XF428726

History - 0	----	19010060 kWh Abs	4850320 kVArh+ Abs	20 kVArh- Abs	19706860 kVAh Abs	19014400 kWh Abs
History - 1	01-Apr-23 12:00:00 AM	18970580 kWh Abs	4837300 kVArh+ Abs	20 kVArh- Abs	19665040 kVAh Abs	18974900 kWh Abs
History - 2	01-Mar-23 12:00:00 AM	18626560 kWh Abs	4724540 kVArh+ Abs	20 kVArh- Abs	19301220 kVAh Abs	18630780 kWh Abs
History - 3	01-Feb-23 12:00:00 AM	18382960 kWh Abs	4637560 kVArh+ Abs	20 kVArh- Abs	19040880 kVAh Abs	18387060 kWh Abs
History - 4	01-Jan-23 12:00:00 AM	18208860 kWh Abs	4573600 kVArh+ Abs	20 kVArh- Abs	18854280 kVAh Abs	18212800 kWh Abs
History - 5	01-Dec-22 12:00:00 AM	17951420 kWh Abs	4497480 kVArh+ Abs	0 kVArh- Abs	18584260 kVAh Abs	17955360 kWh Abs
History - 6	01-Nov-22 12:00:00 AM	17565840 kWh Abs	4398700 kVArh+ Abs	0 kVArh- Abs	18184700 kVAh Abs	17569740 kWh Abs
History - 7	01-Oct-22 12:00:00 AM	16970340 kWh Abs	4266100 kVArh+ Abs	0 kVArh- Abs	17572860 kVAh Abs	16974140 kWh Abs
History - 8	01-Sep-22 12:00:00 AM	16301640 kWh Abs	4117640 kVArh+ Abs	0 kVArh- Abs	16886200 kVAh Abs	16305380 kWh Abs
History - 9	01-Aug-22 12:00:00 AM	15730940 kWh Abs	3997120 kVArh+ Abs	0 kVArh- Abs	16301260 kVAh Abs	15734600 kWh Abs
History - 10	01-Jul-22 12:00:00 AM	15184940 kWh Abs	3880700 kVArh+ Abs	0 kVArh- Abs	15741360 kVAh Abs	15188520 kWh Abs
History - 11	01-Jun-22 12:00:00 AM	15036520 kWh Abs	3849480 kVArh+ Abs	0 kVArh- Abs	15589300 kVAh Abs	15040100 kWh Abs
History - 12	01-May-22 12:00:00 AM	14350720 kWh Abs	3708920 kVArh+ Abs	0 kVArh- Abs	14887660 kVAh Abs	14354280 kWh Abs

Main energy registers

History	Billing Dates	Abs Active Total	Abs Reactive(Lag)	Abs Reactive(Lead)	Abs Apparent	Abs Active XF428728
History - 0	----	30330660 kWh Abs	6207060 kVArh+ Abs	0 kVArh- Abs	31005400 kVAh Abs	30327700 kWh Abs
History - 1	01-Apr-23 12:00:00 AM	30254120 kWh Abs	6189580 kVArh+ Abs	0 kVArh- Abs	30926780 kVAh Abs	30251140 kWh Abs
History - 2	01-Mar-23 12:00:00 AM	29625680 kWh Abs	6035100 kVArh+ Abs	0 kVArh- Abs	30278460 kVAh Abs	29622740 kWh Abs
History - 3	01-Feb-23 12:00:00 AM	29079300 kWh Abs	5896300 kVArh+ Abs	0 kVArh- Abs	29713420 kVAh Abs	29076380 kWh Abs
History - 4	01-Jan-23 12:00:00 AM	28521580 kWh Abs	5771320 kVArh+ Abs	0 kVArh- Abs	29140400 kVAh Abs	28518680 kWh Abs
History - 5	01-Dec-22 12:00:00 AM	27984400 kWh Abs	5669220 kVArh+ Abs	0 kVArh- Abs	28592580 kVAh Abs	27981680 kWh Abs
History - 6	01-Nov-22 12:00:00 AM	27435840 kWh Abs	5556840 kVArh+ Abs	0 kVArh- Abs	28031660 kVAh Abs	27433280 kWh Abs
History - 7	01-Oct-22 12:00:00 AM	26840000 kWh Abs	5445980 kVArh+ Abs	0 kVArh- Abs	27424920 kVAh Abs	26837480 kWh Abs
History - 8	01-Sep-22 12:00:00 AM	26227440 kWh Abs	5333000 kVArh+ Abs	0 kVArh- Abs	26801620 kVAh Abs	26224960 kWh Abs
History - 9	01-Aug-22 12:00:00 AM	25599540 kWh Abs	5222040 kVArh+ Abs	0 kVArh- Abs	26163600 kVAh Abs	25597080 kWh Abs
History - 10	01-Jul-22 12:00:00 AM	25004340 kWh Abs	5109780 kVArh+ Abs	0 kVArh- Abs	25557520 kVAh Abs	25001920 kWh Abs
History - 11	01-Jun-22 12:00:00 AM	24852860 kWh Abs	5077000 kVArh+ Abs	0 kVArh- Abs	25402460 kVAh Abs	24850440 kWh Abs
History - 12	01-May-22 12:00:00 AM	24142840 kWh Abs	4931000 kVArh+ Abs	0 kVArh- Abs	24677080 kVAh Abs	24140480 kWh Abs

Main energy registers

History	Billing Dates	Active(I) Total	Reactive(I)-Active(I)	Reactive(E)-Active(I)	Apparent-Active(I) - type 2	2983404
History - 0	----	80407.85 kWh(I) Tot	25530 kVArh(Lg)-Wh(I)	10.35 kVArh(Ld)-Wh(I)	84876.85 kVAh-Wh(I)	
History - 1	01-May-23 12:00:00 AM	79710.8 kWh(I) Tot	25232.85 kVArh(Lg)-Wh(I)	10.35 kVArh(Ld)-Wh(I)	84114.5 kVAh-Wh(I)	
History - 2	01-Apr-23 12:00:00 AM	75724.05 kWh(I) Tot	23900.6 kVArh(Lg)-Wh(I)	10.3 kVArh(Ld)-Wh(I)	79887.9 kVAh-Wh(I)	
History - 3	01-Mar-23 12:00:00 AM	71980.15 kWh(I) Tot	22748.45 kVArh(Lg)-Wh(I)	9.95 kVArh(Ld)-Wh(I)	75952.8 kVAh-Wh(I)	
History - 4	01-Feb-23 12:00:00 AM	68733.85 kWh(I) Tot	21595.9 kVArh(Lg)-Wh(I)	9.9 kVArh(Ld)-Wh(I)	72490.65 kVAh-Wh(I)	
History - 5	01-Jan-23 12:00:00 AM	65404.35 kWh(I) Tot	20413.1 kVArh(Lg)-Wh(I)	9.3 kVArh(Ld)-Wh(I)	68931.4 kVAh-Wh(I)	
History - 6	01-Dec-22 12:00:00 AM	62065.05 kWh(I) Tot	19263.3 kVArh(Lg)-Wh(I)	9 kVArh(Ld)-Wh(I)	65375.85 kVAh-Wh(I)	
History - 7	01-Nov-22 12:00:00 AM	58720.25 kWh(I) Tot	18124.45 kVArh(Lg)-Wh(I)	8.95 kVArh(Ld)-Wh(I)	61824.15 kVAh-Wh(I)	
History - 8	01-Oct-22 12:00:00 AM	54982.3 kWh(I) Tot	16662.2 kVArh(Lg)-Wh(I)	8.95 kVArh(Ld)-Wh(I)	57788.95 kVAh-Wh(I)	
History - 9	01-Sep-22 12:00:00 AM	51263.15 kWh(I) Tot	15409.4 kVArh(Lg)-Wh(I)	8.8 kVArh(Ld)-Wh(I)	53842.75 kVAh-Wh(I)	
History - 10	01-Aug-22 12:00:00 AM	47419.85 kWh(I) Tot	14273.4 kVArh(Lg)-Wh(I)	8.1 kVArh(Ld)-Wh(I)	49808.8 kVAh-Wh(I)	
History - 11	01-Jul-22 12:00:00 AM	43519.7 kWh(I) Tot	13090.9 kVArh(Lg)-Wh(I)	7.5 kVArh(Ld)-Wh(I)	45707.55 kVAh-Wh(I)	
History - 12	01-Jun-22 12:00:00 AM	39501.55 kWh(I) Tot	11677.9 kVArh(Lg)-Wh(I)	7.45 kVArh(Ld)-Wh(I)	41424.5 kVAh-Wh(I)	

Main energy registers

History	Billing Dates	Active(I) Total	Reactive(I)-Active(I)	Reactive(E)-Active(I)	Apparent-Active(I) - type 2	2984535

History - 0	----	122215.65 kWh(I) Tot	40631.2 kVArh(Lg)-Wh(I)	0 kVArh(Ld)-Wh(I)	129184.75 kVAh-Wh(I)
History - 1	01-May-23 12:00:00 AM	121648.85 kWh(I) Tot	40432.5 kVArh(Lg)-Wh(I)	0 kVArh(Ld)-Wh(I)	128582.95 kVAh-Wh(I)
History - 2	01-Apr-23 12:00:00 AM	118357.75 kWh(I) Tot	39397.75 kVArh(Lg)-Wh(I)	0 kVArh(Ld)-Wh(I)	125126.75 kVAh-Wh(I)
History - 3	01-Mar-23 12:00:00 AM	115409.6 kWh(I) Tot	38475.2 kVArh(Lg)-Wh(I)	0 kVArh(Ld)-Wh(I)	122031.8 kVAh-Wh(I)
History - 4	01-Feb-23 12:00:00 AM	113034.9 kWh(I) Tot	37669.75 kVArh(Lg)-Wh(I)	0 kVArh(Ld)-Wh(I)	119518.2 kVAh-Wh(I)
History - 5	01-Jan-23 12:00:00 AM	110695.3 kWh(I) Tot	36872.55 kVArh(Lg)-Wh(I)	0 kVArh(Ld)-Wh(I)	117038.65 kVAh-Wh(I)
History - 6	01-Dec-22 12:00:00 AM	108344.05 kWh(I) Tot	36052.85 kVArh(Lg)-Wh(I)	0 kVArh(Ld)-Wh(I)	114539.5 kVAh-Wh(I)
History - 7	01-Nov-22 12:00:00 AM	105885.9 kWh(I) Tot	35225.6 kVArh(Lg)-Wh(I)	0 kVArh(Ld)-Wh(I)	111938.55 kVAh-Wh(I)
History - 8	01-Oct-22 12:00:00 AM	103013.15 kWh(I) Tot	34264.1 kVArh(Lg)-Wh(I)	0 kVArh(Ld)-Wh(I)	108902.25 kVAh-Wh(I)
History - 9	01-Sep-22 12:00:00 AM	99832.2 kWh(I) Tot	33282.4 kVArh(Lg)-Wh(I)	0 kVArh(Ld)-Wh(I)	105566.65 kVAh-Wh(I)
History - 10	01-Aug-22 12:00:00 AM	96629.3 kWh(I) Tot	32333.7 kVArh(Lg)-Wh(I)	0 kVArh(Ld)-Wh(I)	102218.7 kVAh-Wh(I)
History - 11	01-Jul-22 12:00:00 AM	93273.2 kWh(I) Tot	31297 kVArh(Lg)-Wh(I)	0 kVArh(Ld)-Wh(I)	98698.9 kVAh-Wh(I)
History - 12	01-Jun-22 12:00:00 AM	89866.05 kWh(I) Tot	30197.7 kVArh(Lg)-Wh(I)	0 kVArh(Ld)-Wh(I)	95112.3 kVAh-Wh(I)

Main energy registers

History	Billing Dates	Active(I) Total	Reactive(I)-Active(I)	Reactive(E)-Active(I)	Apparent-Active(I) - type 2	2984538
History - 0	----	783156.95 kWh(I) Tot	261072.5 kVArh(Lg)-Wh(I)	0 kVArh(Ld)-Wh(I)	827630.1 kVAh-Wh(I)	
History - 1	01-May-23 12:00:00 AM	783093.75 kWh(I) Tot	261044.25 kVArh(Lg)-Wh(I)	0 kVArh(Ld)-Wh(I)	827560.2 kVAh-Wh(I)	
History - 2	01-Apr-23 12:00:00 AM	781586.95 kWh(I) Tot	260558.6 kVArh(Lg)-Wh(I)	0 kVArh(Ld)-Wh(I)	825970.5 kVAh-Wh(I)	
History - 3	01-Mar-23 12:00:00 AM	777417.9 kWh(I) Tot	259247.3 kVArh(Lg)-Wh(I)	0 kVArh(Ld)-Wh(I)	821590.6 kVAh-Wh(I)	
History - 4	01-Feb-23 12:00:00 AM	775146.6 kWh(I) Tot	258496.25 kVArh(Lg)-Wh(I)	0 kVArh(Ld)-Wh(I)	819188.85 kVAh-Wh(I)	
History - 5	01-Jan-23 12:00:00 AM	771074.4 kWh(I) Tot	257210.95 kVArh(Lg)-Wh(I)	0 kVArh(Ld)-Wh(I)	814904.15 kVAh-Wh(I)	
History - 6	01-Dec-22 12:00:00 AM	767809.6 kWh(I) Tot	255628.6 kVArh(Lg)-Wh(I)	0 kVArh(Ld)-Wh(I)	811263 kVAh-Wh(I)	
History - 7	01-Nov-22 12:00:00 AM	758111.2 kWh(I) Tot	251201.55 kVArh(Lg)-Wh(I)	0 kVArh(Ld)-Wh(I)	800574.45 kVAh-Wh(I)	
History - 8	01-Oct-22 12:00:00 AM	748278.3 kWh(I) Tot	246531 kVArh(Lg)-Wh(I)	0 kVArh(Ld)-Wh(I)	789666.7 kVAh-Wh(I)	
History - 9	01-Sep-22 12:00:00 AM	736884.95 kWh(I) Tot	241919.35 kVArh(Lg)-Wh(I)	0 kVArh(Ld)-Wh(I)	777352.95 kVAh-Wh(I)	
History - 10	01-Aug-22 12:00:00 AM	718431.9 kWh(I) Tot	235966.3 kVArh(Lg)-Wh(I)	0 kVArh(Ld)-Wh(I)	757926.95 kVAh-Wh(I)	
History - 11	01-Jul-22 12:00:00 AM	695893.8 kWh(I) Tot	228728.1 kVArh(Lg)-Wh(I)	0 kVArh(Ld)-Wh(I)	734214 kVAh-Wh(I)	
History - 12	01-Jun-22 12:00:00 AM	670324.15 kWh(I) Tot	220603.15 kVArh(Lg)-Wh(I)	0 kVArh(Ld)-Wh(I)	707340.65 kVAh-Wh(I)	

Main energy registers

History	Billing Dates	Active(I) Total	Reactive(I)-Active(I)	Reactive(E)-Active(I)	Apparent-Active(I) - type 2	2984541
History - 0	----	298101.4 kWh(I) Tot	100569.55 kVArh(Lg)-Wh(I)	3307.8 kVArh(Ld)-Wh(I)	316918.3 kVAh-Wh(I)	
History - 1	01-May-23 12:00:00 AM	296391.65 kWh(I) Tot	100020.95 kVArh(Lg)-Wh(I)	3307.8 kVArh(Ld)-Wh(I)	315119.25 kVAh-Wh(I)	
History - 2	01-Apr-23 12:00:00 AM	286614.6 kWh(I) Tot	97194.75 kVArh(Lg)-Wh(I)	3307.8 kVArh(Ld)-Wh(I)	304917.5 kVAh-Wh(I)	
History - 3	01-Mar-23 12:00:00 AM	278270.9 kWh(I) Tot	94566.9 kVArh(Lg)-Wh(I)	3307.8 kVArh(Ld)-Wh(I)	296151.45 kVAh-Wh(I)	
History - 4	01-Feb-23 12:00:00 AM	271505.45 kWh(I) Tot	92241.35 kVArh(Lg)-Wh(I)	3307.8 kVArh(Ld)-Wh(I)	288979.65 kVAh-Wh(	
History - 5	01-Jan-23 12:00:00 AM	264970.6 kWh(I) Tot	89688.15 kVArh(Lg)-Wh(I)	3307.8 kVArh(Ld)-Wh(I)	281946.75 kVAh-Wh(I)	
History - 6	01-Dec-22 12:00:00 AM	258430.15 kWh(I) Tot	87136.8 kVArh(Lg)-Wh(I)	3307.8 kVArh(Ld)-Wh(I)	274909.3 kVAh-Wh(I)	
History - 7	01-Nov-22 12:00:00 AM	251418.05 kWh(I) Tot	84585.9 kVArh(Lg)-Wh(I)	3307.8 kVArh(Ld)-Wh(I)	267430.25 kVAh-Wh(I)	
History - 8	01-Oct-22 12:00:00 AM	244086.55 kWh(I) Tot	81894.95 kVArh(Lg)-Wh(I)	3307.8 kVArh(Ld)-Wh(I)	259596.5 kVAh-Wh(I)	
History - 9	01-Sep-22 12:00:00 AM	235252 kWh(I) Tot	79120.05 kVArh(Lg)-Wh(I)	3307.8 kVArh(Ld)-Wh(I)	250315.75 kVAh-Wh(I)	
History - 10	01-Aug-22 12:00:00 AM	225962.1 kWh(I) Tot	76286.9 kVArh(Lg)-Wh(I)	3307.8 kVArh(Ld)-Wh(I)	240575.3 kVAh-Wh(I)	
History - 11	01-Jul-22 12:00:00 AM	215789.95 kWh(I) Tot	73247.7 kVArh(Lg)-Wh(I)	3307.8 kVArh(Ld)-Wh(I)	229935.4 kVAh-Wh(I)	
History - 12	01-Jun-22 12:00:00 AM	205835.25 kWh(I) Tot	70073.8 kVArh(Lg)-Wh(I)	3307.8 kVArh(Ld)-Wh(I)	219461.45 kVAh-Wh(I)	

Main energy registers

History	Billing Dates	Active(I) Total	Reactive(I)-Active(I)	Reactive(E)-Active(I)	Apparent-Active(I) - type 2	2984552

History - 0	----	354291.45 kWh(I) Tot	131163.8 kVArh(Lg)-Wh(I)	0.5 kVArh(Ld)-Wh(I)	380099.4 kVAh-Wh(I)
History - 1	01-May-23 12:00:00 AM	352596.35 kWh(I) Tot	130599.85 kVArh(Lg)-Wh(I)	0.5 kVArh(Ld)-Wh(I)	378308.95 kVAh-Wh(I)
History - 2	01-Apr-23 12:00:00 AM	342790.2 kWh(I) Tot	127745.45 kVArh(Lg)-Wh(I)	0.5 kVArh(Ld)-Wh(I)	368072.6 kVAh-Wh(I)
History - 3	01-Mar-23 12:00:00 AM	333932.9 kWh(I) Tot	125064.3 kVArh(Lg)-Wh(I)	0.5 kVArh(Ld)-Wh(I)	358794.2 kVAh-Wh(I)
History - 4	01-Feb-23 12:00:00 AM	326577.1 kWh(I) Tot	122685.5 kVArh(Lg)-Wh(I)	0.5 kVArh(Ld)-Wh(I)	351035.9 kVAh-Wh(I)
History - 5	01-Jan-23 12:00:00 AM	319034.2 kWh(I) Tot	120213.7 kVArh(Lg)-Wh(I)	0.5 kVArh(Ld)-Wh(I)	343070 kVAh-Wh(I)
History - 6	01-Dec-22 12:00:00 AM	311640.45 kWh(I) Tot	117601.8 kVArh(Lg)-Wh(I)	0.5 kVArh(Ld)-Wh(I)	335191.95 kVAh-Wh(I)
History - 7	01-Nov-22 12:00:00 AM	304144.1 kWh(I) Tot	115056.4 kVArh(Lg)-Wh(I)	0.5 kVArh(Ld)-Wh(I)	327244.2 kVAh-Wh(I)
History - 8	01-Oct-22 12:00:00 AM	295522 kWh(I) Tot	112182.55 kVArh(Lg)-Wh(I)	0.5 kVArh(Ld)-Wh(I)	318128.2 kVAh-Wh(I)
History - 9	01-Sep-22 12:00:00 AM	286053.7 kWh(I) Tot	109294.35 kVArh(Lg)-Wh(I)	0.45 kVArh(Ld)-Wh(I)	308200.55 kVAh-Wh(I)
History - 10	01-Aug-22 12:00:00 AM	276418.6 kWh(I) Tot	106450.6 kVArh(Lg)-Wh(I)	0.45 kVArh(Ld)-Wh(I)	298122.1 kVAh-Wh(I)
History - 11	01-Jul-22 12:00:00 AM	266311.75 kWh(I) Tot	103393.3 kVArh(Lg)-Wh(I)	0.4 kVArh(Ld)-Wh(I)	287531.6 kVAh-Wh(I)
History - 12	01-Jun-22 12:00:00 AM	255849.9 kWh(I) Tot	100140.65 kVArh(Lg)-Wh(I)	0.35 kVArh(Ld)-Wh(I)	276551.2 kVAh-Wh(I)

Main energy registers

History	Billing Dates	Active(I) Total	Reactive(I)-Active(I)	Reactive(E)-Active(I)	Apparent-Active(I) - type 2	2984582
History - 0	----	81088.3 kWh(I) Tot	21692.4 kVArh(Lg)-Wh(I)	68.35 kVArh(Ld)-Wh(I)	84330.25 kVAh-Wh(I)	
History - 1	01-May-23 12:00:00 AM	80965.85 kWh(I) Tot	21656.95 kVArh(Lg)-Wh(I)	68.3 kVArh(Ld)-Wh(I)	84201.5 kVAh-Wh(I)	
History - 2	01-Apr-23 12:00:00 AM	80090.1 kWh(I) Tot	21468.3 kVArh(Lg)-Wh(I)	67.4 kVArh(Ld)-Wh(I)	83298.1 kVAh-Wh(I)	
History - 3	01-Mar-23 12:00:00 AM	79202.55 kWh(I) Tot	21295.7 kVArh(Lg)-Wh(I)	66.6 kVArh(Ld)-Wh(I)	82388 kVAh-Wh(I)	
History - 4	01-Jun-22 12:00:00 AM	78663.6 kWh(I) Tot	21167.25 kVArh(Lg)-Wh(I)	66.25 kVArh(Ld)-Wh(I)	81829.55 kVAh-Wh(I)	
History - 5	01-May-22 12:00:00 AM	77100.1 kWh(I) Tot	20823.45 kVArh(Lg)-Wh(I)	66.05 kVArh(Ld)-Wh(I)	80223.15 kVAh-Wh(I)	
History - 6	01-Apr-22 12:00:00 AM	74246.4 kWh(I) Tot	20162.55 kVArh(Lg)-Wh(I)	66.05 kVArh(Ld)-Wh(I)	77286.9 kVAh-Wh(I)	
History - 7	01-Mar-22 12:00:00 AM	71652.25 kWh(I) Tot	19659 kVArh(Lg)-Wh(I)	65.9 kVArh(Ld)-Wh(I)	74636.35 kVAh-Wh(I)	
History - 8	01-Feb-22 12:00:00 AM	69691.75 kWh(I) Tot	19228.3 kVArh(Lg)-Wh(I)	65.45 kVArh(Ld)-Wh(I)	72622.7 kVAh-Wh(I)	
History - 9	01-Jan-22 12:00:00 AM	67724.75 kWh(I) Tot	18761.6 kVArh(Lg)-Wh(I)	63.7 kVArh(Ld)-Wh(I)	70593.2 kVAh-Wh(I)	
History - 10	01-Dec-21 12:00:00 AM	65784.25 kWh(I) Tot	18344.9 kVArh(Lg)-Wh(I)	60.7 kVArh(Ld)-Wh(I)	68599.35 kVAh-Wh(I)	
History - 11	01-Nov-21 12:00:00 AM	63706.05 kWh(I) Tot	17746.1 kVArh(Lg)-Wh(I)	47.8 kVArh(Ld)-Wh(I)	66425.75 kVAh-Wh(I)	
History - 12	01-Oct-21 12:00:00 AM	61251 kWh(I) Tot	17144.6 kVArh(Lg)-Wh(I)	41 kVArh(Ld)-Wh(I)	63888.9 kVAh-Wh(I)	

Main energy registers

History	Billing Dates	Active(I) Total	Reactive(I)-Active(I)	Reactive(E)-Active(I)	Apparent-Active(I) - type 2	2984583
History - 0	----	43813.9 kWh(I) Tot	11139.65 kVArh(Lg)-Wh(I)	0 kVArh(Ld)-Wh(I)	45406.65 kVAh-Wh(I)	
History - 1	01-May-23 12:00:00 AM	41493.9 kWh(I) Tot	10534.75 kVArh(Lg)-Wh(I)	0 kVArh(Ld)-Wh(I)	43000.4 kVAh-Wh(I)	
History - 2	01-Apr-23 12:00:00 AM	25832.65 kWh(I) Tot	6966.45 kVArh(Lg)-Wh(I)	0 kVArh(Ld)-Wh(I)	26882.15 kVAh-Wh(I)	
History - 3	01-Mar-23 12:00:00 AM	13637.8 kWh(I) Tot	3904.55 kVArh(Lg)-Wh(I)	0 kVArh(Ld)-Wh(I)	14268 kVAh-Wh(I)	
History - 4	01-Feb-23 12:00:00 AM	12591.85 kWh(I) Tot	3633.35 kVArh(Lg)-Wh(I)	0 kVArh(Ld)-Wh(I)	13184.4 kVAh-Wh(I)	
History - 5	01-Jan-23 12:00:00 AM	12586.35 kWh(I) Tot	3630.35 kVArh(Lg)-Wh(I)	0 kVArh(Ld)-Wh(I)	13178.05 kVAh-Wh(I)	
History - 6	01-Dec-22 12:00:00 AM	12541.45 kWh(I) Tot	3604.5 kVArh(Lg)-Wh(I)	0 kVArh(Ld)-Wh(I)	13125.9 kVAh-Wh(I)	
History - 7	01-Nov-22 12:00:00 AM	12178.85 kWh(I) Tot	3487.55 kVArh(Lg)-Wh(I)	0 kVArh(Ld)-Wh(I)	12743.1 kVAh-Wh(I)	
History - 8	01-Oct-22 12:00:00 AM	11694.2 kWh(I) Tot	3337.7 kVArh(Lg)-Wh(I)	0 kVArh(Ld)-Wh(I)	12233.55 kVAh-Wh(I)	
History - 9	01-Sep-22 12:00:00 AM	11610.05 kWh(I) Tot	3309.75 kVArh(Lg)-Wh(I)	0 kVArh(Ld)-Wh(I)	12144.3 kVAh-Wh(I)	
History - 10	01-Aug-22 12:00:00 AM	11508.65 kWh(I) Tot	3278.5 kVArh(Lg)-Wh(I)	0 kVArh(Ld)-Wh(I)	12037.35 kVAh-Wh(I)	
History - 11	01-Jul-22 12:00:00 AM	11450.55 kWh(I) Tot	3252.45 kVArh(Lg)-Wh(I)	0 kVArh(Ld)-Wh(I)	11973.1 kVAh-Wh(I)	
History - 12	01-Jun-22 12:00:00 AM	11082.85 kWh(I) Tot	3156.05 kVArh(Lg)-Wh(I)	0 kVArh(Ld)-Wh(I)	11590.7 kVAh-Wh(I)	

Main energy registers

History	Billing Dates	Active(I) Total	Reactive(I)-Active(I)	Reactive(E)-Active(I)	Apparent-Active(I) - type 2	2984586

History - 0	----	107878.8 kWh(I) Tot	26073.35 kVArh(Lg)-Wh(I)	134.4 kVArh(Ld)-Wh(I)	111454.15 kVAh-Wh(I)
History - 1	01-May-23 12:00:00 AM	92853.5 kWh(I) Tot	23355.1 kVArh(Lg)-Wh(I)	134.35 kVArh(Ld)-Wh(I)	96139.15 kVAh-Wh(I)
History - 2	01-Apr-23 12:00:00 AM	76702.5 kWh(I) Tot	20253.65 kVArh(Lg)-Wh(I)	134.35 kVArh(Ld)-Wh(I)	79644.6 kVAh-Wh(I)
History - 3	01-Mar-23 12:00:00 AM	63761.85 kWh(I) Tot	17543.15 kVArh(Lg)-Wh(I)	134.35 kVArh(Ld)-Wh(I)	66383 kVAh-Wh(I)
History - 4	01-Feb-23 12:00:00 AM	58422.05 kWh(I) Tot	16301.15 kVArh(Lg)-Wh(I)	134.35 kVArh(Ld)-Wh(I)	60885.75 kVAh-Wh(I)
History - 5	01-Jan-23 12:00:00 AM	57059.75 kWh(I) Tot	15948.8 kVArh(Lg)-Wh(I)	134.35 kVArh(Ld)-Wh(I)	59474 kVAh-Wh(I)
History - 6	01-Dec-22 12:00:00 AM	56025.8 kWh(I) Tot	15682.4 kVArh(Lg)-Wh(I)	134.35 kVArh(Ld)-Wh(I)	58402.8 kVAh-Wh(I)
History - 7	01-Nov-22 12:00:00 AM	54502.55 kWh(I) Tot	15290.65 kVArh(Lg)-Wh(I)	134.35 kVArh(Ld)-Wh(I)	56825.45 kVAh-Wh(I)
History - 8	01-Oct-22 12:00:00 AM	52656.25 kWh(I) Tot	14801.1 kVArh(Lg)-Wh(I)	134.35 kVArh(Ld)-Wh(I)	54909.9 kVAh-Wh(I)
History - 9	01-Sep-22 12:00:00 AM	50588.6 kWh(I) Tot	14292.25 kVArh(Lg)-Wh(I)	134.3 kVArh(Ld)-Wh(I)	52776.35 kVAh-Wh(I)
History - 10	01-Aug-22 12:00:00 AM	48557.75 kWh(I) Tot	13833.1 kVArh(Lg)-Wh(I)	134.3 kVArh(Ld)-Wh(I)	50689.75 kVAh-Wh(I)
History - 11	01-Jul-22 12:00:00 AM	46452.85 kWh(I) Tot	13320.1 kVArh(Lg)-Wh(I)	134.3 kVArh(Ld)-Wh(I)	48519.15 kVAh-Wh(I)
History - 12	01-Jun-22 12:00:00 AM	44167.25 kWh(I) Tot	12732.7 kVArh(Lg)-Wh(I)	134.3 kVArh(Ld)-Wh(I)	46155.05 kVAh-Wh(I)

Main energy registers

History	Billing Dates	Active(I) Total	Reactive(I)-Active(I)	Reactive(E)-Active(I)	Apparent-Active(I) - type 2	2984590
History - 0	----	81501.45 kWh(I) Tot	22677.6 kVArh(Lg)-Wh(I)	109.85 kVArh(Ld)-Wh(I)	84890.35 kVAh-Wh(I)	
History - 1	01-May-23 12:00:00 AM	78554.05 kWh(I) Tot	21899.6 kVArh(Lg)-Wh(I)	109.85 kVArh(Ld)-Wh(I)	81836.75 kVAh-Wh(I)	
History - 2	01-Apr-23 12:00:00 AM	58069.8 kWh(I) Tot	17112.45 kVArh(Lg)-Wh(I)	109.85 kVArh(Ld)-Wh(I)	60762.7 kVAh-Wh(I)	
History - 3	01-Mar-23 12:00:00 AM	41950.2 kWh(I) Tot	12817.3 kVArh(Lg)-Wh(I)	109.85 kVArh(Ld)-Wh(I)	44055 kVAh-Wh(I)	
History - 4	01-Nov-22 12:00:00 AM	35862.55 kWh(I) Tot	11137.15 kVArh(Lg)-Wh(I)	109.85 kVArh(Ld)-Wh(I)	37729.85 kVAh-Wh(I)	
History - 5	01-Oct-22 12:00:00 AM	35862.55 kWh(I) Tot	11137.15 kVArh(Lg)-Wh(I)	109.85 kVArh(Ld)-Wh(I)	37729.85 kVAh-Wh(I)	
History - 6	01-Sep-22 12:00:00 AM	35862.55 kWh(I) Tot	11137.15 kVArh(Lg)-Wh(I)	109.85 kVArh(Ld)-Wh(I)	37729.85 kVAh-Wh(I)	
History - 7	01-Aug-22 12:00:00 AM	35862.55 kWh(I) Tot	11137.15 kVArh(Lg)-Wh(I)	109.85 kVArh(Ld)-Wh(I)	37729.85 kVAh-Wh(I)	
History - 8	01-Jul-22 12:00:00 AM	35862.55 kWh(I) Tot	11137.15 kVArh(Lg)-Wh(I)	109.85 kVArh(Ld)-Wh(I)	37729.85 kVAh-Wh(I)	
History - 9	01-Jun-22 12:00:00 AM	35862.55 kWh(I) Tot	11137.15 kVArh(Lg)-Wh(I)	109.85 kVArh(Ld)-Wh(I)	37729.85 kVAh-Wh(I)	
History - 10	01-May-22 12:00:00 AM	35862.55 kWh(I) Tot	11137.15 kVArh(Lg)-Wh(I)	109.85 kVArh(Ld)-Wh(I)	37729.85 kVAh-Wh(	
History - 11	01-Apr-22 12:00:00 AM	35862.55 kWh(I) Tot	11137.15 kVArh(Lg)-Wh(I)	109.85 kVArh(Ld)-Wh(I)	37729.85 kVAh-Wh(I)	
History - 12	01-Mar-22 12:00:00 AM	35862.55 kWh(I) Tot	11137.15 kVArh(Lg)-Wh(I)	109.85 kVArh(Ld)-Wh(I)	37729.85 kVAh-Wh(I)	

Main energy registers

History	Billing Dates	Active(I) Total	Reactive(I)-Active(I)	Reactive(E)-Active(I)	Apparent-Active(I) - type 2	2984591
History - 0	----	777017.85 kWh(I) Tot	314523.1 kVArh(Lg)-Wh(I)	0.05 kVArh(Ld)-Wh(I)	843631.3 kVAh-Wh(I)	
History - 1	01-May-23 12:00:00 AM	771409.85 kWh(I) Tot	312683.45 kVArh(Lg)-Wh(I)	0 kVArh(Ld)-Wh(I)	837716.1 kVAh-Wh(I)	
History - 2	01-Apr-23 12:00:00 AM	751273.55 kWh(I) Tot	306502.2 kVArh(Lg)-Wh(I)	0 kVArh(Ld)-Wh(I)	816606.35 kVAh-Wh(I)	
History - 3	01-Mar-23 12:00:00 AM	735068.9 kWh(I) Tot	301192.75 kVArh(Lg)-Wh(I)	0 kVArh(Ld)-Wh(I)	799508.4 kVAh-Wh(I)	
History - 4	01-Feb-23 12:00:00 AM	721597.8 kWh(I) Tot	295926.8 kVArh(Lg)-Wh(I)	0 kVArh(Ld)-Wh(I)	784967.4 kVAh-Wh(I)	
History - 5	01-Jan-23 12:00:00 AM	709736.6 kWh(I) Tot	290691.1 kVArh(Lg)-Wh(I)	0 kVArh(Ld)-Wh(I)	771913.3 kVAh-Wh(I)	
History - 6	01-Dec-22 12:00:00 AM	695922.85 kWh(I) Tot	284221.85 kVArh(Lg)-Wh(I)	0 kVArh(Ld)-Wh(I)	756578.2 kVAh-Wh(I)	
History - 7	01-Nov-22 12:00:00 AM	678450.8 kWh(I) Tot	276670.5 kVArh(Lg)-Wh(I)	0 kVArh(Ld)-Wh(I)	737487.6 kVAh-Wh(I)	
History - 8	01-Oct-22 12:00:00 AM	657015.95 kWh(I) Tot	268332.45 kVArh(Lg)-Wh(I)	0 kVArh(Ld)-Wh(I)	714439.95 kVAh-Wh(I)	
History - 9	01-Sep-22 12:00:00 AM	635461.55 kWh(I) Tot	260897.4 kVArh(Lg)-Wh(I)	0 kVArh(Ld)-Wh(I)	691590.2 kVAh-Wh(I)	
History - 10	01-Aug-22 12:00:00 AM	612221.3 kWh(I) Tot	252810.5 kVArh(Lg)-Wh(I)	0 kVArh(Ld)-Wh(I)	666915.75 kVAh-Wh(I)	
History - 11	01-Jul-22 12:00:00 AM	589369 kWh(I) Tot	245137.85 kVArh(Lg)-Wh(I)	0 kVArh(Ld)-Wh(I)	642748.3 kVAh-Wh(I)	
History - 12	01-Jun-22 12:00:00 AM	568193.8 kWh(I) Tot	238134 kVArh(Lg)-Wh(I)	0 kVArh(Ld)-Wh(I)	620390.65 kVAh-Wh(I)	

Main energy registers

History	Billing Dates	Active(I) Total	Reactive(I)-Active(I)	Reactive(E)-Active(I)	Apparent-Active(I) - type 2	2984599

History - 0	----	101931.45 kWh(I) Tot	29424.65 kVArh(Lg)-Wh(I)	150.2 kVArh(Ld)-Wh(I)	106465.45 kVAh-Wh(I)
History - 1	01-May-23 12:00:00 AM	100414.05 kWh(I) Tot	29005.1 kVArh(Lg)-Wh(I)	150.2 kVArh(Ld)-Wh(I)	104886.65 kVAh-Wh(I)
History - 2	01-Apr-23 12:00:00 AM	89937.05 kWh(I) Tot	26389 kVArh(Lg)-Wh(I)	150.2 kVArh(Ld)-Wh(I)	94057.95 kVAh-Wh(I)
History - 3	01-Mar-23 12:00:00 AM	81759 kWh(I) Tot	24096.25 kVArh(Lg)-Wh(I)	150.2 kVArh(Ld)-Wh(I)	85543.8 kVAh-Wh(I)
History - 4	01-Feb-23 12:00:00 AM	77607.75 kWh(I) Tot	22981.2 kVArh(Lg)-Wh(I)	150.2 kVArh(Ld)-Wh(I)	81235.25 kVAh-Wh(I)
History - 5	01-Jan-23 12:00:00 AM	75985.85 kWh(I) Tot	22488.25 kVArh(Lg)-Wh(I)	150.2 kVArh(Ld)-Wh(I)	79536.95 kVAh-Wh(I)
History - 6	01-Dec-22 12:00:00 AM	74761.7 kWh(I) Tot	22113.3 kVArh(Lg)-Wh(I)	150.2 kVArh(Ld)-Wh(I)	78254.15 kVAh-Wh(I)
History - 7	01-Nov-22 12:00:00 AM	72954.7 kWh(I) Tot	21583.75 kVArh(Lg)-Wh(I)	150.2 kVArh(Ld)-Wh(I)	76367.75 kVAh-Wh(I)
History - 8	01-Oct-22 12:00:00 AM	70809.05 kWh(I) Tot	20955 kVArh(Lg)-Wh(I)	150.2 kVArh(Ld)-Wh(I)	74127 kVAh-Wh(I)
History - 9	01-Sep-22 12:00:00 AM	68243.1 kWh(I) Tot	20309.85 kVArh(Lg)-Wh(I)	150.15 kVArh(Ld)-Wh(I)	71475.8 kVAh-Wh(I)
History - 10	01-Aug-22 12:00:00 AM	65639.8 kWh(I) Tot	19672.2 kVArh(Lg)-Wh(I)	150.15 kVArh(Ld)-Wh(I)	68789.5 kVAh-Wh(I)
History - 11	01-Jul-22 12:00:00 AM	62903.95 kWh(I) Tot	18987.15 kVArh(Lg)-Wh(I)	150.15 kVArh(Ld)-Wh(I)	65963.5 kVAh-Wh(I)
History - 12	01-Jun-22 12:00:00 AM	59984.8 kWh(I) Tot	18238.25 kVArh(Lg)-Wh(I)	150.15 kVArh(Ld)-Wh(I)	62943.7 kVAh-Wh(I)

Main energy registers

History	Billing Dates	Active(I) Total	Reactive(I)-Active(I)	Reactive(E)-Active(I)	Apparent-Active(I) - type 2	2984624
History - 0	----	119405.15 kWh(I) Tot	50908.8 kVArh(Lg)-Wh(I)	62.15 kVArh(Ld)-Wh(I)	130953.35 kVAh-Wh(I)	
History - 1	01-May-23 12:00:00 AM	118703.45 kWh(I) Tot	50519.35 kVArh(Lg)-Wh(I)	62.1 kVArh(Ld)-Wh(I)	130145.05 kVAh-Wh(I)	
History - 2	01-Apr-23 12:00:00 AM	113966.7 kWh(I) Tot	47907.9 kVArh(Lg)-Wh(I)	62.05 kVArh(Ld)-Wh(I)	124697.35 kVAh-Wh(I)	
History - 3	01-Mar-23 12:00:00 AM	107949.95 kWh(I) Tot	45044.5 kVArh(Lg)-Wh(I)	61.5 kVArh(Ld)-Wh(I)	117999.25 kVAh-Wh(I)	
History - 4	01-Feb-23 12:00:00 AM	102682.45 kWh(I) Tot	42258.4 kVArh(Lg)-Wh(I)	61.45 kVArh(Ld)-Wh(I)	112002.1 kVAh-Wh(I)	
History - 5	01-Jan-23 12:00:00 AM	96608.95 kWh(I) Tot	39306.75 kVArh(Lg)-Wh(I)	61.3 kVArh(Ld)-Wh(I)	105208.85 kVAh-Wh(I)	
History - 6	01-Dec-22 12:00:00 AM	90160.15 kWh(I) Tot	36250.35 kVArh(Lg)-Wh(I)	61.15 kVArh(Ld)-Wh(I)	98033.1 kVAh-Wh(I)	
History - 7	01-Nov-22 12:00:00 AM	83897.9 kWh(I) Tot	33379.3 kVArh(Lg)-Wh(I)	61.05 kVArh(Ld)-Wh(I)	91110.05 kVAh-Wh(I)	
History - 8	01-Oct-22 12:00:00 AM	79154.75 kWh(I) Tot	30926.3 kVArh(Lg)-Wh(I)	60.3 kVArh(Ld)-Wh(I)	85727.7 kVAh-Wh(I)	
History - 9	01-Sep-22 12:00:00 AM	74183.3 kWh(I) Tot	28491.65 kVArh(Lg)-Wh(I)	56.25 kVArh(Ld)-Wh(I)	80150.7 kVAh-Wh(I)	
History - 10	01-Aug-22 12:00:00 AM	68664.4 kWh(I) Tot	26354.45 kVArh(Lg)-Wh(I)	51 kVArh(Ld)-Wh(I)	74180.8 kVAh-Wh(I)	
History - 11	01-Jul-22 12:00:00 AM	62893.65 kWh(I) Tot	23731.05 kVArh(Lg)-Wh(I)	48.6 kVArh(Ld)-Wh(I)	67787.45 kVAh-Wh(I)	
History - 12	01-Jun-22 12:00:00 AM	57267.05 kWh(I) Tot	21481.05 kVArh(Lg)-Wh(I)	47.75 kVArh(Ld)-Wh(I)	61696.65 kVAh-Wh(I)	

Main energy registers

History	Billing Dates	Active(I) Total	Reactive(I)-Active(I)	Reactive(E)-Active(I)	Apparent-Active(I) - type 2	2984660
History - 0	----	248439.25 kWh(I) Tot	138689.5 kVArh(Lg)-Wh(I)	73.15 kVArh(Ld)-Wh(I)	287833.2 kVAh-Wh(I)	
History - 1	01-May-23 12:00:00 AM	245798.5 kWh(I) Tot	137154.45 kVArh(Lg)-Wh(I)	73.15 kVArh(Ld)-Wh(I)	284759.15 kVAh-Wh(	
History - 2	01-Apr-23 12:00:00 AM	236279.7 kWh(I) Tot	132393.4 kVArh(Lg)-Wh(I)	73.15 kVArh(Ld)-Wh(I)	274049.95 kVAh-Wh(I)	
History - 3	01-Mar-23 12:00:00 AM	227292.8 kWh(I) Tot	127442.2 kVArh(Lg)-Wh(I)	73.15 kVArh(Ld)-Wh(I)	263736.4 kVAh-Wh(I)	
History - 4	01-Apr-22 12:00:00 AM	221333.55 kWh(I) Tot	123883.35 kVArh(Lg)-Wh(I)	73.15 kVArh(Ld)-Wh(I)	256764.2 kVAh-Wh(I)	
History - 5	01-Mar-22 12:00:00 AM	216850.75 kWh(I) Tot	122258.35 kVArh(Lg)-Wh(I)	73.1 kVArh(Ld)-Wh(I)	251965.2 kVAh-Wh(I)	
History - 6	01-Feb-22 12:00:00 AM	210079.25 kWh(I) Tot	119388.5 kVArh(Lg)-Wh(I)	20 kVArh(Ld)-Wh(I)	244521.9 kVAh-Wh(I)	
History - 7	01-Jan-22 12:00:00 AM	203527.5 kWh(I) Tot	116465.75 kVArh(Lg)-Wh(I)	19.9 kVArh(Ld)-Wh(I)	237293.8 kVAh-Wh(I)	
History - 8	01-Dec-21 12:00:00 AM	196931.05 kWh(I) Tot	113728.35 kVArh(Lg)-Wh(I)	17.3 kVArh(Ld)-Wh(I)	230076.45 kVAh-Wh(I)	
History - 9	01-Nov-21 12:00:00 AM	190283.9 kWh(I) Tot	109882.4 kVArh(Lg)-Wh(I)	14.45 kVArh(Ld)-Wh(I)	222343 kVAh-Wh(I)	
History - 10	01-Oct-21 12:00:00 AM	182038.6 kWh(I) Tot	106372.15 kVArh(Lg)-Wh(I)	2.15 kVArh(Ld)-Wh(I)	213308.25 kVAh-Wh(I)	
History - 11	01-Sep-21 12:00:00 AM	174473.55 kWh(I) Tot	102884.2 kVArh(Lg)-Wh(I)	2.1 kVArh(Ld)-Wh(I)	204914.95 kVAh-Wh(I)	
History - 12	01-Aug-21 12:00:00 AM	165741.4 kWh(I) Tot	98876.65 kVArh(Lg)-Wh(I)	2.1 kVArh(Ld)-Wh(I)	195244.3 kVAh-Wh(I)	

Main energy registers

History	Billing Dates	Active(I) Total	Reactive(I)-Active(I)	Reactive(E)-Active(I)	Apparent-Active(I) - type 2	2984711

History - 0	----	389300.7 kWh(I) Tot	154214.6 kVArh(Lg)-Wh(I)	0.85 kVArh(Ld)-Wh(I)	423675.25 kVAh-Wh(I)
History - 1	01-May-23 12:00:00 AM	385937.15 kWh(I) Tot	153284.8 kVArh(Lg)-Wh(I)	0.85 kVArh(Ld)-Wh(I)	420161.95 kVAh-Wh(I)
History - 2	01-Apr-23 12:00:00 AM	374046.15 kWh(I) Tot	150185.9 kVArh(Lg)-Wh(I)	0.85 kVArh(Ld)-Wh(I)	407798 kVAh-Wh(I)
History - 3	01-Mar-23 12:00:00 AM	363659.5 kWh(I) Tot	147249.95 kVArh(Lg)-Wh(I)	0.7 kVArh(Ld)-Wh(I)	396927.4 kVAh-Wh(I)
History - 4	01-Dec-22 12:00:00 AM	357371.15 kWh(I) Tot	145372.25 kVArh(Lg)-Wh(I)	0.7 kVArh(Ld)-Wh(I)	390319.35 kVAh-Wh(I)
History - 5	01-Nov-22 12:00:00 AM	357371.15 kWh(I) Tot	145372.25 kVArh(Lg)-Wh(I)	0.7 kVArh(Ld)-Wh(I)	390319.35 kVAh-Wh(I)
History - 6	01-Oct-22 12:00:00 AM	357371.15 kWh(I) Tot	145372.25 kVArh(Lg)-Wh(I)	0.7 kVArh(Ld)-Wh(I)	390319.35 kVAh-Wh(I)
History - 7	01-Sep-22 12:00:00 AM	347362.65 kWh(I) Tot	142707.6 kVArh(Lg)-Wh(I)	0.7 kVArh(Ld)-Wh(I)	379909.75 kVAh-Wh(I)
History - 8	01-Aug-22 12:00:00 AM	335914.95 kWh(I) Tot	139708.4 kVArh(Lg)-Wh(I)	0.7 kVArh(Ld)-Wh(I)	368011.65 kVAh-Wh(I)
History - 9	01-Jul-22 12:00:00 AM	323995 kWh(I) Tot	136451.75 kVArh(Lg)-Wh(I)	0.7 kVArh(Ld)-Wh(I)	355595.65 kVAh-Wh(I)
History - 10	01-Jun-22 12:00:00 AM	312303.15 kWh(I) Tot	132863.75 kVArh(Lg)-Wh(I)	0.7 kVArh(Ld)-Wh(I)	343313.25 kVAh-Wh(I)
History - 11	01-May-22 12:00:00 AM	299918.9 kWh(I) Tot	129601.75 kVArh(Lg)-Wh(I)	0.7 kVArh(Ld)-Wh(I)	330455.05 kVAh-Wh(I)
History - 12	01-Apr-22 12:00:00 AM	287982.05 kWh(I) Tot	126653.75 kVArh(Lg)-Wh(I)	0.7 kVArh(Ld)-Wh(I)	318103.95 kVAh-Wh(I)

Main energy registers

History	Billing Dates	Active(I) Total	Reactive(I)-Active(I)	Reactive(E)-Active(I)	Apparent-Active(I) - type 2	2984729
History - 0	----	413181.6 kWh(I) Tot	104639.4 kVArh(Lg)-Wh(I)	0.1 kVArh(Ld)-Wh(I)	428116.4 kVAh-Wh(I)	
History - 1	01-May-23 12:00:00 AM	409620.1 kWh(I) Tot	103627.25 kVArh(Lg)-Wh(I)	0.1 kVArh(Ld)-Wh(I)	424403.75 kVAh-Wh(I)	
History - 2	01-Apr-23 12:00:00 AM	397615.45 kWh(I) Tot	100087.6 kVArh(Lg)-Wh(I)	0.1 kVArh(Ld)-Wh(I)	411846.45 kVAh-Wh(I)	
History - 3	01-Mar-23 12:00:00 AM	387581.05 kWh(I) Tot	96826.65 kVArh(Lg)-Wh(I)	0.1 kVArh(Ld)-Wh(I)	401259.35 kVAh-Wh(I)	
History - 4	01-Feb-23 12:00:00 AM	379766.1 kWh(I) Tot	94337.55 kVArh(Lg)-Wh(I)	0.1 kVArh(Ld)-Wh(I)	393032.5 kVAh-Wh(I)	
History - 5	01-Jan-23 12:00:00 AM	372334.8 kWh(I) Tot	91996.8 kVArh(Lg)-Wh(I)	0.1 kVArh(Ld)-Wh(I)	385211.7 kVAh-Wh(I)	
History - 6	01-Dec-22 12:00:00 AM	364636.6 kWh(I) Tot	89547.45 kVArh(Lg)-Wh(I)	0.1 kVArh(Ld)-Wh(I)	377097.45 kVAh-Wh(I)	
History - 7	01-Nov-22 12:00:00 AM	356555.1 kWh(I) Tot	87266.35 kVArh(Lg)-Wh(I)	0.1 kVArh(Ld)-Wh(I)	368672.35 kVAh-Wh(I)	
History - 8	01-Oct-22 12:00:00 AM	346931 kWh(I) Tot	84641.6 kVArh(Lg)-Wh(I)	0.1 kVArh(Ld)-Wh(I)	358666.35 kVAh-Wh(I)	
History - 9	01-Sep-22 12:00:00 AM	335428.05 kWh(I) Tot	81799.8 kVArh(Lg)-Wh(I)	0.1 kVArh(Ld)-Wh(I)	346786.45 kVAh-Wh(I)	
History - 10	01-Aug-22 12:00:00 AM	323874.05 kWh(I) Tot	79075.5 kVArh(Lg)-Wh(I)	0.1 kVArh(Ld)-Wh(I)	334880.9 kVAh-Wh(I)	
History - 11	01-Jul-22 12:00:00 AM	311902.75 kWh(I) Tot	76235.05 kVArh(Lg)-Wh(I)	0.1 kVArh(Ld)-Wh(I)	322546.05 kVAh-Wh(I)	
History - 12	01-Jun-22 12:00:00 AM	299721.15 kWh(I) Tot	73050.55 kVArh(Lg)-Wh(I)	0.1 kVArh(Ld)-Wh(I)	309925.3 kVAh-Wh(I)	

Main energy registers

History	Billing Dates	Active(I) Total	Reactive(I)-Active(I)	Reactive(E)-Active(I)	Apparent-Active(I) - type 2	2984878
History - 0	----	202659.15 kWh(I) Tot	45893.65 kVArh(Lg)-Wh(I)	239.6 kVArh(Ld)-Wh(I)	209253.2 kVAh-Wh(I)	
History - 1	01-May-23 12:00:00 AM	200818.15 kWh(I) Tot	45355.75 kVArh(Lg)-Wh(I)	239.6 kVArh(Ld)-Wh(I)	207325.75 kVAh-Wh(	
History - 2	01-Apr-23 12:00:00 AM	187320.45 kWh(I) Tot	42113.9 kVArh(Lg)-Wh(I)	239.6 kVArh(Ld)-Wh(I)	193398.15 kVAh-Wh(I)	
History - 3	01-Mar-23 12:00:00 AM	175402 kWh(I) Tot	38849.55 kVArh(Lg)-Wh(I)	239.6 kVArh(Ld)-Wh(I)	180996.45 kVAh-Wh(I)	
History - 4	01-Sep-22 12:00:00 AM	169587.8 kWh(I) Tot	37305.8 kVArh(Lg)-Wh(I)	239.6 kVArh(Ld)-Wh(I)	174960.2 kVAh-Wh(I)	
History - 5	01-Aug-22 12:00:00 AM	167849.2 kWh(I) Tot	37087.4 kVArh(Lg)-Wh(I)	239.2 kVArh(Ld)-Wh(I)	173200.3 kVAh-Wh(I)	
History - 6	01-Jul-22 12:00:00 AM	155066.2 kWh(I) Tot	34798.8 kVArh(Lg)-Wh(I)	238.2 kVArh(Ld)-Wh(I)	160144.9 kVAh-Wh(I)	
History - 7	01-Jun-22 12:00:00 AM	142040.45 kWh(I) Tot	31745.85 kVArh(Lg)-Wh(I)	238.2 kVArh(Ld)-Wh(I)	146673.75 kVAh-Wh(I)	
History - 8	01-May-22 12:00:00 AM	128802.35 kWh(I) Tot	28978.85 kVArh(Lg)-Wh(I)	236.4 kVArh(Ld)-Wh(I)	133078.65 kVAh-Wh(	
History - 9	01-Apr-22 12:00:00 AM	116554.05 kWh(I) Tot	26553.15 kVArh(Lg)-Wh(I)	236.4 kVArh(Ld)-Wh(I)	120541.05 kVAh-Wh(I)	
History - 10	01-Mar-22 12:00:00 AM	105666.35 kWh(I) Tot	24753.05 kVArh(Lg)-Wh(I)	224.8 kVArh(Ld)-Wh(I)	109434.4 kVAh-Wh(I)	
History - 11	01-Feb-22 12:00:00 AM	97760.55 kWh(I) Tot	23395.65 kVArh(Lg)-Wh(I)	163 kVArh(Ld)-Wh(I)	101340.05 kVAh-Wh(I)	
History - 12	01-Jan-22 12:00:00 AM	89997.55 kWh(I) Tot	22135.35 kVArh(Lg)-Wh(I)	35.1 kVArh(Ld)-Wh(I)	93391.6 kVAh-Wh(I)	

Main energy registers

History	Billing Dates	Active(I) Total	Reactive(I)-Active(I)	Reactive(E)-Active(I)	Apparent-Active(I) - type 2	2984964

History - 0	----	43957.45 kWh(I) Tot	12856.95 kVArh(Lg)-Wh(I)	89.2 kVArh(Ld)-Wh(I)	46063.65 kVAh-Wh(I)
History - 1	01-May-23 12:00:00 AM	43680.4 kWh(I) Tot	12786.8 kVArh(Lg)-Wh(I)	89.2 kVArh(Ld)-Wh(I)	45777.3 kVAh-Wh(I)
History - 2	01-Apr-23 12:00:00 AM	40276.05 kWh(I) Tot	11994.05 kVArh(Lg)-Wh(I)	89.2 kVArh(Ld)-Wh(I)	42272.3 kVAh-Wh(I)
History - 3	01-Mar-23 12:00:00 AM	37577.85 kWh(I) Tot	11286.75 kVArh(Lg)-Wh(I)	89.2 kVArh(Ld)-Wh(I)	39473.55 kVAh-Wh(I)
History - 4	01-Feb-23 12:00:00 AM	35019.85 kWh(I) Tot	10330.4 kVArh(Lg)-Wh(I)	89.2 kVArh(Ld)-Wh(I)	36724 kVAh-Wh(I)
History - 5	01-Jan-23 12:00:00 AM	32183.1 kWh(I) Tot	9010.55 kVArh(Lg)-Wh(I)	89.2 kVArh(Ld)-Wh(I)	33581 kVAh-Wh(I)
History - 6	01-Dec-22 12:00:00 AM	29361.5 kWh(I) Tot	7983.65 kVArh(Lg)-Wh(I)	89.2 kVArh(Ld)-Wh(I)	30551.7 kVAh-Wh(I)
History - 7	01-Nov-22 12:00:00 AM	26689.25 kWh(I) Tot	7368.25 kVArh(Lg)-Wh(I)	67.05 kVArh(Ld)-Wh(I)	27791.9 kVAh-Wh(I)
History - 8	01-Oct-22 12:00:00 AM	24785.2 kWh(I) Tot	6944.75 kVArh(Lg)-Wh(I)	0 kVArh(Ld)-Wh(I)	25813.8 kVAh-Wh(I)
History - 9	01-Sep-22 12:00:00 AM	22906.05 kWh(I) Tot	6447.9 kVArh(Lg)-Wh(I)	0 kVArh(Ld)-Wh(I)	23865.15 kVAh-Wh(I)
History - 10	01-Aug-22 12:00:00 AM	21027 kWh(I) Tot	5967.6 kVArh(Lg)-Wh(I)	0 kVArh(Ld)-Wh(I)	21920 kVAh-Wh(I)
History - 11	01-Jul-22 12:00:00 AM	19138.4 kWh(I) Tot	5451.9 kVArh(Lg)-Wh(I)	0 kVArh(Ld)-Wh(I)	19957.55 kVAh-Wh(I)
History - 12	01-Jun-22 12:00:00 AM	17065.2 kWh(I) Tot	4895.8 kVArh(Lg)-Wh(I)	0 kVArh(Ld)-Wh(I)	17806.25 kVAh-Wh(I)

Main energy registers

History	Billing Dates	Active(I) Total	Reactive(I)-Active(I)	Reactive(E)-Active(I)	Apparent-Active(I) - type 2	2985027
History - 0	----	1067213.5 kWh(I) Tot	311201.55 kVArh(Lg)-Wh(I)	0 kVArh(Ld)-Wh(I)	1115296 kVAh-Wh(I)	
History - 1	01-May-23 12:00:00 AM	1062922.05 kWh(I) Tot	309985.75 kVArh(Lg)-Wh(I)	0 kVArh(Ld)-Wh(I)	1110823.85 kVAh-Wh(	
History - 2	01-Apr-23 12:00:00 AM	1038963.8 kWh(I) Tot	303728.4 kVArh(Lg)-Wh(I)	0 kVArh(Ld)-Wh(I)	1086003.55 kVAh-Wh(I)	
History - 3	01-Mar-23 12:00:00 AM	1018113.75 kWh(I) Tot	298158.4 kVArh(Lg)-Wh(I)	0 kVArh(Ld)-Wh(I)	1064372.6 kVAh-Wh(I)	
History - 4	01-Feb-23 12:00:00 AM	1005779.6 kWh(I) Tot	294660.8 kVArh(Lg)-Wh(I)	0 kVArh(Ld)-Wh(I)	1051523.85 kVAh-Wh(I)	
History - 5	01-Jan-23 12:00:00 AM	997474.05 kWh(I) Tot	292096 kVArh(Lg)-Wh(I)	0 kVArh(Ld)-Wh(I)	1042808.1 kVAh-Wh(I)	
History - 6	01-Dec-22 12:00:00 AM	981548.65 kWh(I) Tot	287208.8 kVArh(Lg)-Wh(I)	0 kVArh(Ld)-Wh(I)	1026102.5 kVAh-Wh(I)	
History - 7	01-Nov-22 12:00:00 AM	964168.8 kWh(I) Tot	282174.55 kVArh(Lg)-Wh(I)	0 kVArh(Ld)-Wh(I)	1007959.7 kVAh-Wh(I)	
History - 8	01-Oct-22 12:00:00 AM	942878.95 kWh(I) Tot	276101.3 kVArh(Lg)-Wh(I)	0 kVArh(Ld)-Wh(I)	985766.9 kVAh-Wh(I)	
History - 9	01-Sep-22 12:00:00 AM	919300.15 kWh(I) Tot	269781.9 kVArh(Lg)-Wh(I)	0 kVArh(Ld)-Wh(I)	961297.75 kVAh-Wh(I)	
History - 10	01-Aug-22 12:00:00 AM	895587.1 kWh(I) Tot	263607.4 kVArh(Lg)-Wh(I)	0 kVArh(Ld)-Wh(I)	936732.35 kVAh-Wh(I)	
History - 11	01-Jul-22 12:00:00 AM	871086.55 kWh(I) Tot	257025.9 kVArh(Lg)-Wh(I)	0 kVArh(Ld)-Wh(I)	911298.15 kVAh-Wh(I)	
History - 12	01-Jun-22 12:00:00 AM	845489.95 kWh(I) Tot	249942.45 kVArh(Lg)-Wh(I)	0 kVArh(Ld)-Wh(I)	884670.6 kVAh-Wh(I)	

Main energy registers

History	Billing Dates	Active(I) Total	Reactive(I)-Active(I)	Reactive(E)-Active(I)	Apparent-Active(I) - type 2	2985028
History - 0	----	114596.2 kWh(I) Tot	33344.4 kVArh(Lg)-Wh(I)	0 kVArh(Ld)-Wh(I)	119653.7 kVAh-Wh(I)	
History - 1	01-May-23 12:00:00 AM	111921.15 kWh(I) Tot	32622.9 kVArh(Lg)-Wh(I)	0 kVArh(Ld)-Wh(I)	116877.65 kVAh-Wh(I)	
History - 2	01-Apr-23 12:00:00 AM	93408.2 kWh(I) Tot	28112.25 kVArh(Lg)-Wh(I)	0 kVArh(Ld)-Wh(I)	97785.95 kVAh-Wh(I)	
History - 3	01-Mar-23 12:00:00 AM	79091.95 kWh(I) Tot	24207.5 kVArh(Lg)-Wh(I)	0 kVArh(Ld)-Wh(I)	82923.7 kVAh-Wh(I)	
History - 4	01-Feb-23 12:00:00 AM	73377.7 kWh(I) Tot	22560.2 kVArh(Lg)-Wh(I)	0 kVArh(Ld)-Wh(I)	76968.4 kVAh-Wh(I)	
History - 5	01-Jan-23 12:00:00 AM	71893.75 kWh(I) Tot	22084.55 kVArh(Lg)-Wh(I)	0 kVArh(Ld)-Wh(I)	75407.95 kVAh-Wh(I)	
History - 6	01-Dec-22 12:00:00 AM	70800.8 kWh(I) Tot	21739.65 kVArh(Lg)-Wh(I)	0 kVArh(Ld)-Wh(I)	74260.35 kVAh-Wh(I)	
History - 7	01-Nov-22 12:00:00 AM	69157.3 kWh(I) Tot	21243.2 kVArh(Lg)-Wh(I)	0 kVArh(Ld)-Wh(I)	72541.25 kVAh-Wh(I)	
History - 8	01-Oct-22 12:00:00 AM	67176.55 kWh(I) Tot	20655.6 kVArh(Lg)-Wh(I)	0 kVArh(Ld)-Wh(I)	70472 kVAh-Wh(I)	
History - 9	01-Sep-22 12:00:00 AM	64807.55 kWh(I) Tot	20016.6 kVArh(Lg)-Wh(I)	0 kVArh(Ld)-Wh(I)	68014.15 kVAh-Wh(I)	
History - 10	01-Aug-22 12:00:00 AM	62390.95 kWh(I) Tot	19386.75 kVArh(Lg)-Wh(I)	0 kVArh(Ld)-Wh(I)	65512.2 kVAh-Wh(I)	
History - 11	01-Jul-22 12:00:00 AM	59875.5 kWh(I) Tot	18715.8 kVArh(Lg)-Wh(I)	0 kVArh(Ld)-Wh(I)	62904.3 kVAh-Wh(I)	
History - 12	01-Jun-22 12:00:00 AM	57085.4 kWh(I) Tot	17982.2 kVArh(Lg)-Wh(I)	0 kVArh(Ld)-Wh(I)	60014.5 kVAh-Wh(I)	

Main energy registers

History	Billing Dates	Active(I) Total	Reactive(I)-Active(I)	Reactive(E)-Active(I)	Apparent-Active(I) - type 2	2985031

History - 0	----	215789.6 kWh(I) Tot	54344.05 kVArh(Lg)-Wh(I)	0 kVArh(Ld)-Wh(I)	223190.6 kVAh-Wh(I)
History - 1	01-May-23 12:00:00 AM	214386.55 kWh(I) Tot	54009.75 kVArh(Lg)-Wh(I)	0 kVArh(Ld)-Wh(I)	221744.85 kVAh-Wh(I)
History - 2	01-Apr-23 12:00:00 AM	208177.75 kWh(I) Tot	52571.1 kVArh(Lg)-Wh(I)	0 kVArh(Ld)-Wh(I)	215359.2 kVAh-Wh(I)
History - 3	01-Mar-23 12:00:00 AM	202806.25 kWh(I) Tot	51194.6 kVArh(Lg)-Wh(I)	0 kVArh(Ld)-Wh(I)	209803.65 kVAh-Wh(I)
History - 4	01-Feb-23 12:00:00 AM	198423.9 kWh(I) Tot	49995.95 kVArh(Lg)-Wh(I)	0 kVArh(Ld)-Wh(I)	205251.1 kVAh-Wh(I)
History - 5	01-Jan-23 12:00:00 AM	194360.55 kWh(I) Tot	48770.55 kVArh(Lg)-Wh(I)	0 kVArh(Ld)-Wh(I)	200996.05 kVAh-Wh(I)
History - 6	01-Dec-22 12:00:00 AM	190241.65 kWh(I) Tot	47533.05 kVArh(Lg)-Wh(I)	0 kVArh(Ld)-Wh(I)	196683.6 kVAh-Wh(I)
History - 7	01-Nov-22 12:00:00 AM	185651.7 kWh(I) Tot	46317.7 kVArh(Lg)-Wh(I)	0 kVArh(Ld)-Wh(I)	191923.25 kVAh-Wh(I)
History - 8	01-Oct-22 12:00:00 AM	180098.7 kWh(I) Tot	44921.2 kVArh(Lg)-Wh(I)	0 kVArh(Ld)-Wh(I)	186183.85 kVAh-Wh(I)
History - 9	01-Sep-22 12:00:00 AM	174180.3 kWh(I) Tot	43511.65 kVArh(Lg)-Wh(I)	0 kVArh(Ld)-Wh(I)	180086 kVAh-Wh(I)
History - 10	01-Aug-22 12:00:00 AM	168375.9 kWh(I) Tot	42194.65 kVArh(Lg)-Wh(I)	0 kVArh(Ld)-Wh(I)	174118.35 kVAh-Wh(I)
History - 11	01-Jul-22 12:00:00 AM	162390.35 kWh(I) Tot	40767.65 kVArh(Lg)-Wh(I)	0 kVArh(Ld)-Wh(I)	167950.85 kVAh-Wh(I)
History - 12	01-Jun-22 12:00:00 AM	155917.4 kWh(I) Tot	39101.2 kVArh(Lg)-Wh(I)	0 kVArh(Ld)-Wh(I)	161249.75 kVAh-Wh(I)

ANNEXURE – 4

(Audit Proceedings)

Annual Energy Audit Proceedings at Tata Power Southern Odisha Distribution Limited, Odisha (TPSODL) for FY 2022-23

Dates:03.07.2023 to 04.07.2023

TEAM FROM EAST COAST SUSTAINABLE PRIVATE LIMITED, VISAKHAPATNAM

1. Mr. G. Srinivasa Rao, AEA
2. Mr. S. Janardhana Rao, Sector Expert
3. Mr. P. V. RamPrasad, CEA
4. Mr. K. Lokeswara Rao, Engineer
5. Miss. J. Sai Sowmya, Engineer

TEAM FROM Tata Power Southern Odisha Distribution Limited (TPSODL) , Odisha.

1. Mr. Saumitro Banerjee, CMG & MMG (Head)
2. Mr. Mahishikar Krishna Chaitanya.HOG-CMG
3. Mr. Vaibhav Kumar Singh Team Leader(dept- Energy Audit)
4. Mr. Ratan Kuber, Energy Manager (Lead Engineer)
5. Ms. Shephali Gupta, Lead Engineer, Energy Audit.

The audit team has verified various measurement and monitoring systems available at Tata Power Southern Odisha Distribution Limited (TPSODL) for relevant Annual Energy Audit for FY 2022-23. Subsequently, the audit team verified the data filled in sector specific pro-forma document by the DISCOM with primary and secondary documents and the details are tabulated as follows.

S.NO	Reference	Name	Available Monitoring System	Record Verification	Supporting Document	Remarks
FY 2022-23 Data Verification						
Input Energy						
1	A1 to A22	Input Energy (MU)	OPTCL/Gridco is a bulk supply licency for all discoms in Odisha. T<>D Interface meters are in the control of OPTCL and are read with MRI. Gridco provide purchase bills mentioning meter wise input along with Meter dumps. The purchase bills include Bulk supply energy bill, The bulk supply energy bills includes energy input to distrubution system as well as suplly to OA consumers and EHT consumers.	The DC purchases electricity at T<>D interface from gridco. Hence transmisson loss has no relevance to DC. DC has provided bulk supply energy bill for 12 months of FY 2022-23. The net energy input (including EHT Sales) is 4203.95 MU	1. BSEB (Bulk Supply Energy Bills) for 12 months.	Soft Copy received .
Division Losses						
2	Column A to V	No of connection metered (Nos)	DC has category wise connections as part of fluent grid Portal / CIS (Cosumer information system).	For inter-division energy calculation, feeder wise and inter-division meters are installed	1. Caclucation of division wise input energy.	Received
		No of connection Un-metered (Nos)				
		Connected Load Metered (MW)	DC has category wise connections as part of fluent grid Portal / CIS (Cosumer information system).			
		Connected Load Un-metered (MW)				
		Input Energy (MU)	Energy Input to divisons is prepared from individual meter input recorded in bulk supply energy bill.			
		Metered energy (MU)	DC has category wise connections as part of fluent grid Portal / CIS (Cosumer information system).			
		Unmetered energy/Assessment Energy	DC has category wise connections as part of fluent grid Portal / CIS (Cosumer information system).	All connections are installed with meters.		
		Billed Amount	DC has category wise connections as part of fluent grid Portal / CIS (Cosumer information system).	Pro-Forma Sheet provided by BEE is password protected. Refering to CEA Guidelines on methodology for calculation of AT&C losses(2018), treatment of revence from energy sales does not mentioned without arrears.		
		Collected Amount				
		AT&C Loss	AT&C loss is estimated based on BEE formula			
Details of Input Energy Sources						
3	A	Generation at Transmission Periphery (Details)	GRIDCO as bulk supply licency is purchasing power from various sources and supplying to all DISCOMS in odisha.As such there is no direct purchase from generating sources by DISCOMS of odisha.	GRIDCO tariff order issued by OERC provides details of input energy sources.	OERC tarffi order in Case No 107 of 2021. Application for approval of ARR and determination of bulk supply price of GRIDCO Ltd for FY 2022-23.	Soft Copy received .
	B	Embedded Generation in DISCOM Area	DC has solar root top system as embedded generation and details are provided from CIS.	Total capacity is 33.549404MW and generation is 2.25 MU.		
Details of Feeder wise Losses						
4			Mapping of consumers (GIS) is in pregress and feeder wise consumption/sales data shall be computed from FY 23-24 onwards.	On sample basis DC has provided PDF form of meter readings converted from meter dumps for 10 No. of feeders.	Meter dumps in PDF formate for March 2023.	Received

East Coast Sustainable Pvt. Ltd.

Details of Consumers and Consumption						
5		DC has category wise connections as part of fluent grid Portal / CIS (Cosumer information system).				
Details of DT wise metering and Losses						
6			DC has already installed smart meters for all government consumers. DC has started installing smart meters for DTRs. 16000 smart meters will be installed with smart meter on DTRs capacity above 25KVA by Dec 2023 of which 1088 Nos DTRs are metered and rest by March 2025	DC has informed that it is the process of implementing smart meters for DTRs	Data in MS Excel.	
Details of Subsidy						
7			DC is a private DISCOM and does not receive any tariff subsidy from the government.			

Clauses of BEE Regulations						
Clause	Clause Details	Sub Clause Number	Subclause Details	Present Status	Documents Verified	Remarks
3	Intervals of time for conduct of annual energy audit	a	Conducted an annual energy audit for every financial year and submitted the annual energy audit report to the Bureau and respective State Designated Agency and also made available on the website of the electricity distribution company within a period of four months from the expiry of the relevant financial year	Annual energy audit for FY2020-2021, FY 2021-2022, was conducted and reports was submitted.		
4	Intervals of time for conduct of periodic energy accounting.	a	All feeder wise, circle wise and division wise periodic energy accounting is conducted by the energy manager of the electricity distribution company for each quarter of the financial year.	Periodic energy accounting reports for Q1,Q2, Q3 and Q4 for FY22-23 have been prepared by the DC and submitted to BEE, SDA and as per the BEE regulation and also posted the details on the TPSODL website.		Soft copy has been submitted
		b	Submitted the periodic energy accounting report to the Bureau and respective State Designated Agency and also made available on the website of electricity distribution company within forty-five days from the date of the periodic energy accounting.	Periodic energy accounting reports for Q1,Q2, Q3 and Q4 for FY22-23 have been prepared by the DC and submitted to BEE, SDA and as per the BEE regulation and also posted the details on the TPSODL website.	https://www.tpsouthernodisha.com/energy-conservation/BEE_Report/PEA	Soft copy has been submitted
		c	Electricity distribution company conducted its first periodic energy accounting, for the last quarter of the financial year immediately preceding the date of such commencement (i.e. 6th October 2021).	Periodic energy accounting reports for Q1,Q2, Q3 and Q4 for FY22-23 have been prepared by the DC and submitted to BEE, SDA and as per the BEE regulation and also posted the details on the TPSODL website.	https://www.tpsouthernodisha.com/energy-conservation/BEE_Report/PEA	
		d	Electricity distribution company conducted its subsequent periodic energy accounting for each quarter of the financial year for a period of two financial years from the date of such commencement, and submit the periodic energy accounting report within sixty days from the date of periodic energy accounting.	Periodic energy accounting reports for Q1,Q2, Q3 and Q4 for FY22-23 have been prepared by the DC and submitted to BEE, SDA and as per the BEE regulation and also posted the details on the TPSODL website.	https://www.tpsouthernodisha.com/energy-conservation/BEE_Report/PEA	
5	Pre-requisites for annual energy audit and periodic energy accounting	a	Identification and mapping of all of the electrical network assets	All the electrical assets are mapped into TPSODL Dashboard. Billing data is stored in CBS (Centralised Billing System) software.		
		b	Identification and mapping of high tension and low-tension consumers	Mapping of EHT/HT/LT cousmers with Section, Division and Sub-Division are mapped in fluent grid Portal / CIS (Cosumer information system).		
		c	Development and implementation of information technology enabled energy accounting and audit system, including associated software	DC has portal for Energy Aduit in which circle level data is uploaded. The uploaded data includes input energy , session wise sales , session wise billed amount and collected ammount.	1.Entry of input energy data and sales data are uploaded through bulk formats into the portal 2. Integration of SARATHI 2.0 with Smart Meters /CIS is under progress and would enable automatic fetching of consumption/Sales data. 3. AT&C losses report downloaded from SARATHI 2.0 for the months of Dec 2022, Jan 2023.	

Clause	Clause Details	Sub Clause Number	Subclause Details	Present Status	Documents Verified	Remarks
	Pre-requisites for annual energy audit and periodic energy accounting	d	Electricity distribution company ensures the installation of functional meters for all consumers, transformers and feeders. Meter installation is done in a phased manner within a period of three financial years from the date of the commencement of these regulations in accordance with the trajectory set out in the First Schedule	All consumers including agricultural consumers are metered. DC has already installed smart meters for all government consumers. DC has started installing smart meters for DTRs. 16000 smart meters will be installed with smart meter on DTRs capacity above 25KVA by Dec 2023 and rest by March 2025 DC has informed that 719 Nos of 11KV feeders out of 906 Nos are installed with Communicable meters with AMR and remaining feeder will be installed with Communicable meter by Sept 2023	55528 Number of consumers are having defective meters as on 31st march 2023 DC is in the process of installing smart meters for consumers. DC has already installed smart meters for all government consumers. DC has started installing smart meters for DTRs. 16000 smart meters will be installed with smart meter on DTRs capacity above 25KVA by Dec 2023 and rest by March 2025	Caterogy wise defective meter status as on 31st march 2023.
			d.1. 100% Communicable Feeder Metering integrated with AMI, by 31st December 2022 along with replacement of existing non-communicable feeder meters.	DC has informed that 713 Nos of 11KV feeders out of 906 Nos are installed with Communicable meters with AMR and remaining feeder will be installed with Communicable meter with AMI by Sept 2023	Verified during the site visit	
5		d	d.2. All **Distribution Transformers** (other than HVDS DT up to 25kVA and other DTs below 25 kVA) shall be metered with communicable meters. Communicable DT Metering for the following areas/ consumers to be completed by March 2023 and in balance areas by December 2023: d.2.1. All Electricity Divisions of 500 AMRUT cities, with AT&C Losses > 15% d.2.2. All Union Territories (for areas with technical difficulty, non-communicable meters may be installed) d.2.3. All Industrial and Commercial consumers d.2.4. All Government offices at Block level and above d.2.5. Other high loss areas i.e. rural areas with losses more than 25% and urban areas with losses more than 15%	d.2.1. Not Relevant for DC. d.2.2. Not Relevant for DC. d.2.3. DC will install communicable meters with AMI for DTRs of **commercial and industrial consumers by the end of December 2023.** d.2.4. DC will install communicable meters with AMI for DTRs of **Government offices at Block level(Mandal) and above by the end of December 2023.** d.2.5. DC will install communicable meters with AMI forDTRs of **other high loss areas** i.e. rural areas with losses more than 25% and urban areas with losses more than 15% by the end of Dec 2023.	Verified during the site visit	
	Pre-requisites for annual energy audit and periodic energy accounting		d.3. **Prepaid Smart Consumer Metering** to be completed for all directly connected meters and AMR in case of other meters, by December 2025 in the following areas: d.3.1. All Electricity Divisions of 500 AMRUT cities, with AT&C Losses > 15%; d.3.2. All Union Territories (for areas with technical difficulty, prepaid meters to be installed); d.3.3. All Industrial and Commercial consumers; d.3.4. All Government offices at Block level and above; d.3.5. Other high loss areas i.e. rural areas with losses more than 25% and urban areas with losses more than 15%.	d.3.1. Not applicable d.3.2. Not applicable d.3.3. Smart meters installed for industrial and commercial consumers has option for prepaid facility. d.3.4. have been provieded with prepaid facility . d.3.5. DC has imformed that prepaid meters for consumers in high loss area with losses more than 25% and urban area with losses more than 15% will be installed by Decemeber 2025		
			d.4. Consumer Metering: 98% by FY 2022-23 99% by FY 2023-24	All consumers are metered.		
			d.5. Targets for functional meters— Meter FY 22-23 FY 23-24 FY24-25 Feeder metering 98.5% 99.5% 99.5% DT metering 90% 95% 98% Consumer metering 93% 96% 98	Out of total 906Nos of 11kV feeders, 713 numbers of feeders are metered out of that 596(80%) are functional DC has already installed smart meters for all government consumers. DC has started installing smart meters for DTRs. 16000 smart meters will be installed with smart meter on DTRs capacity above 25KVA by Dec 2023 and rest by March 202597.6% of consumer meters are functional as on 31 March 2023.		
5	Pre-requisites for annual energy audit and periodic energy accounting	e	e.1. All distribution transformers (other than high voltage distribution system up to 25kVA and other distribution system below 25 kVA) is metered with communicable meters and existing non communicable distribution transformer meters is replaced with communicable meters and integrated with advanced metering infrastructure.	DC has already installed smart meters for all government consumers. DC has started installing smart meters for DTRs. 16000 smart meters will be installed with smart meter on DTRs capacity above 25KVA by Dec 2023 and rest by March 2025		
		f	Electricity distribution company has established an information technology enabled system to create energy accounting reports without any manual interference and such systems may be within a period of three years from the date of the commencement of these regulations in case of urban and priority area consumers; and within five years from the date of the commencement of these regulations in case of rural consumers	DC has portal for Energy Aduit in which circle level data is uploaded. The uploaded data includes input energy , session wise sales , session wise billed amount and collected ammount.	1.Entry of input energy data and sales data are uploaded through bulk formats into the portal 2. Integration of SARATHI 2.0 with Smart Meters /CIS is under progress and would enable automatic fetching of consumption/Sales data. 3. AT&C losses report downloaded from SARATHI 2.0 for the months of Dec 2022, Jan 2023.	

East Coast Sustainable Pvt. Ltd.

Clause	Clause Details	Sub Clause Number	Subclause Details	Present Status	Documents Verified	Remarks
		g	Electricity distribution company has a centralized energy accounting and audit cell comprising of— (i) a nodal officer, an energy manager and an information technology manager, having professional experience of not less than five years; and (ii) a financial manager having professional experience of not less than five years	The DC has energy audit cell with the following staff 1. A Nodal officer- Head Energy Audit 2. Designated energy manager who is a qualified energy auditor- Lead engineer. 3. A qualified information technology manager- Head of Group (IT) 4. A qualified financial manager- Financal Controller.	Office Order of energy audit cell to be provided.	Full fledged energy auditing department is in place and functional
6	Reporting requirements for annual energy audit and periodic energy accounting	a	Electricity distribution company has a nodal officer, who is a full time employee of the electricity distribution company in the rank of the Chief Engineer or above, for the purpose of reporting of the annual energy audit and periodic energy accounting and communicate the same to the Bureau.	Chief Commerical Officer is the Nodal officer, who is a full time employee of the electricity distribution company in the rank of the Chief Engineer or above, for the purpose of reporting of the annual energy audit and periodic energy accounting and communicate the same to the Bureau.	Office Order of energy audit cell to be pr	Full fledged energy auditing department is in place and functional
		b	Electricity distribution company ensures that the energy accounting data is generated from a metering system or till such time the metering system is not in place, by an agreed method of assumption as may be prescribed by the State Commission	All the consumption is based on metered data and all consumer cataerogies are metered.		
	Reporting requirements for annual energy audit and periodic energy accounting	c	Metering of distribution transformers at High Voltage Distribution System up to 25KVA is done on cluster meter installed by the electricity distribution company	Individual a consumers are metered and hence culster metering is not required.		
		d	The energy accounting and audit system and software is developed to create monthly, quarterly and yearly energy accounting reports.	The DC has developed an energy accounting and audit system and software which is having the capability to create monthly, yearly energy accounting reports(SARATHI 2.0).		
6		e	Electricity distribution company has provided the details of the information technology system in place as specified in clause (f) of regulation 5 that ensures minimal manual intervention in creating the energy accounting reports and any manual intervention of any nature, in respect of the period specified therein, shall be clearly indicated in the periodic energy accounting report	DC has portal for Energy Aduit in which circle level data is uploaded. The uploaded data includes input energy , session wise sales , session wise billed amount and collected ammount.	1.Entry of input energy data and sales data are uploaded through bulk formats into the portal 2. Integration of SARATHI 2.0 with Smart Meters /CIS is under progress and would enable automatic fetching of consumption/Sales data. 3. AT&C losses report downloaded from SARATHI 2.0 for the months of Dec 2022, Jan 2023.	Received
7	Validation through sample data checks and field visits:	a. Validation of feeder data:	Based on data available in 11 kV Feeder meter at substation for a sample size of 10% for which documentary evidence to be captured in the audit report.	DC has provided Meter dumps data for 93 Number of feeders	Backup data for 93 number of feeders will be provided in PDF format.	Received
		b. Validation of energy flow data and losses:	Min. 10 or 1% (whichever is higher) of DISCOM's input energy metering points between Transmission and 66kV/33kV/11kV distribution feeders by checking functional and communication status of meters etc.	DC has provided monthly energy input data for 10 numbers of T<>D interface meters.	Backup data for 10 nos sample of T<>D interface meters	Received
		For all Divisions with AT&C losses greater than 25% or at-least 1/3 of the total Divisions of DISCOM	Total of min. 10 or 1% of metering points (whichever is higher) between 220-132-110- 66 /33 kV outgoing and 22kV-11kV-6.6kV-3kV incoming feeders/ direct end-consumer by checking functional and communication status of meters.	Following are the divisons with AT&C losses with greater than 25% : AED 1 (Aska 1) , AED 2(Aska 2), BOED(boudh) , HED (hinjili), KED (koraput), MED (malkangiri), NED (nabrangpur), PSED (puroshottampur).	Backup data for 10 nos of outgoing feeders	Received
			In an Urban High Loss Division, check 5 or 1% of Metering points (whichever is higher) at DTs where communicable meters were already installed under other schemes such as R-APDRP and IPDS.	1088 meters of DTRs are installed under IPDS were of communicable type and DC has provided sample meter dump for 5 Nos DTs	Backup data for 5 nos of DTs	Received

Clause	Clause Details	Sub Clause Number	Subclause Details	Present Status	Documents Verified	Remarks
			Total of min. of 10 or 1% of metering points (whichever is higher) between 11kV/6.6kV feeders and DTs by checking functional and Communication status of meters.	DC has provided Meter dumps data for 93 Number of feeders		Received
	Validation through sample data checks and field visits:	For all Divisions with AT&C losses greater than 25% or at-least 1/3 of the total Divisions of DISCOM	Foot survey of feeder to check for thefts/ hooking etc.	Thefts and hooking cases for 8 divisions which have more than 25% AT&C losses are provided by DC.	Sample reports have been collected.	Received
			Verify metering and connection status of min. of 10 or 2% consumers of the Division (whichever is higher) of the following category of consumers – Agriculture (Metered and Un-metered), Govt. category connection (ULB, RLB etc.), and LT Industrial.	DC will provide the 2% consumers of the Division (whichever is higher) of the following category of consumers – Agriculture (Metered and Un-metered), Govt. category connection (ULB, RLB etc.), and LT Industrial.	Sample reports have been collected.	Received

TEAM FROM EAST COAST SUSTAINABLE PRIVATE LIMITED, VISAKHAPATNAM

1.AEA Mr. G. Srinivasa Rao

2.Sector Expert Mr. S. Janardhana Rao

3.CEA Mr. P. V. RamPrasad

4.Engineer Mr. K. Lokeswara Rao

5.Engineer Miss. J. Sai Sowmya

East Coast Sustainable Pvt. Ltd.

TEAM FROM Tata Power Southern Odisha Distribution Limited, Odisha (TPSODL) for FY 2022-23

1 Nodal officer Mr. Saumitro Banerjee

2. Contact person Mr. Krishna Chaitanya

3. Field Coordinator Mr. Vaibhav Kumar Singh

4.Energy Manager Mr. Ratan Kuber

5. Team Member Ms. Shephali Gupta

ANNEXURE – 5

(SLD of Circles)

IMS DOC. - F(08)-TPSODL-10.35.06-SLD-02-ASKA

ASKA CIRCLE (NOC)

TPSODL

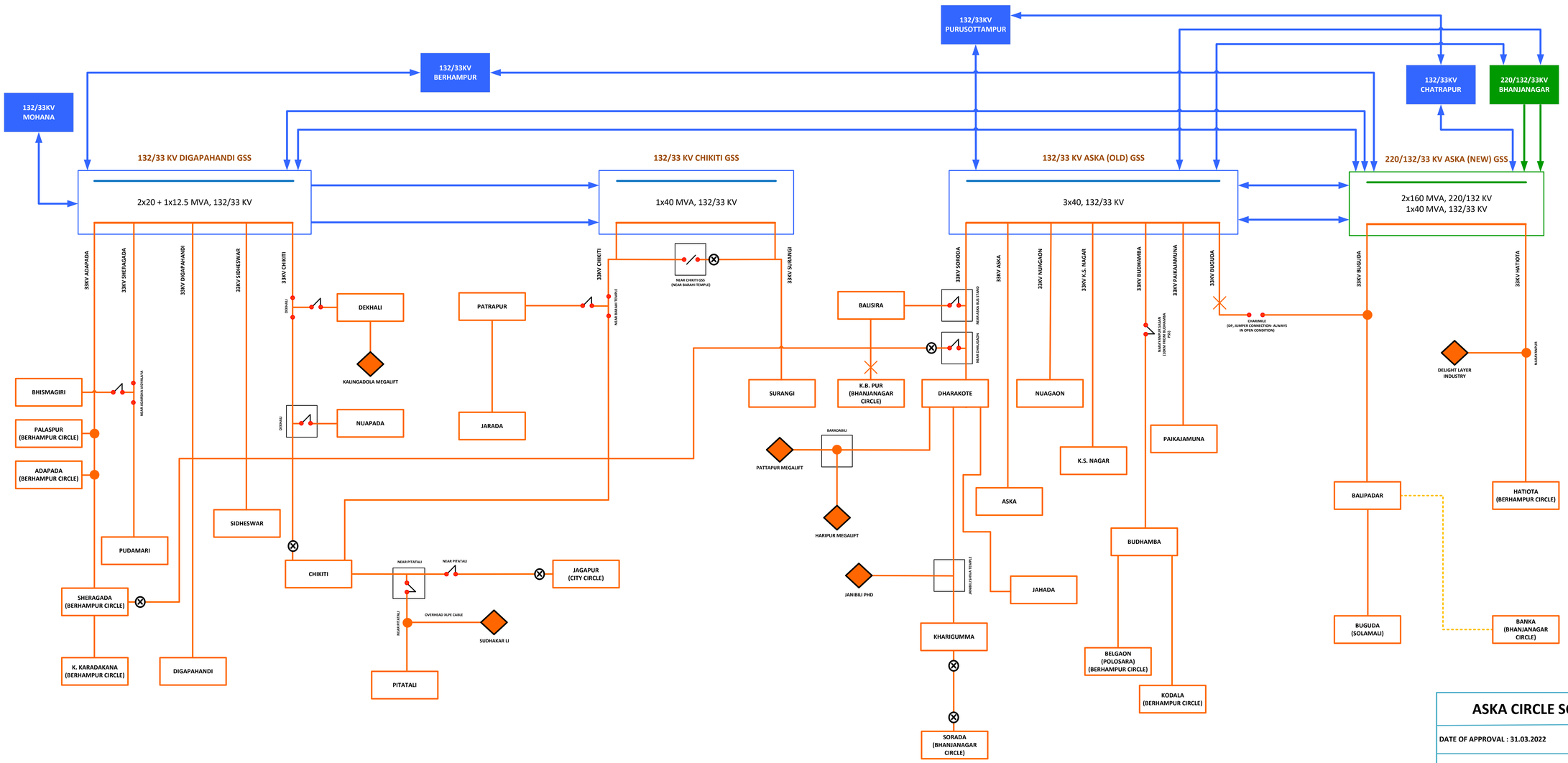

SL NO.	LEGENDS	DESCRIPTIONS
01		220/132/33KV (OR) 220/33KV GSS
02		132/33KV GSS
03		33/11KV PSS
04		220KV EHT CONSUMER
05		132KV EHT CONSUMER
06		33KV HT CONSUMER
07		220KV LINE
08		132KV LINE
09		33KV LINE
10		FOUR POLE STRUCTURE
11		SUPPLY DEAD
12		DOUBLE BREAK ISOLATOR
13		AIR BREAK SWITCH
14		DOUBLE POLE STRUCTURE
15		CUT POINT (JUMPER OPEN)
16		EARTH SWITCH
17		PROPOSED LINE/UNDER CONSTRUCTION
18		SINGLE POLE STRUCTURE
19		33/0.4KV DTR
20		SOLAR POWER STATION
21		HYDRO POWER STATION
22		NORMALLY OPEN POINT (NOP)

ASKA CIRCLE SCHEMATIC NETWORK DIAGRAM

DATE OF APPROVAL : 31.03.2022	DRAWN BY : BHARAT RATAN BARUN KUMAR ROUT
REVISION DATE :	CHECKED BY : RAVIKANT- HEAD PSCC
REVISION NO : 00	APPROVED BY : MILIND P. KULKARNI- CHIEF OPERATIONS

TPSODL - TEAM PSCC

© PROPERTY OF TP SOUTHERN ODISHA DISTRIBUTION LIMITED (TPSODL)

IMS DOC. - F(08)-TPSODL-10.35.06-SLD-03-BERH

BERHAMPUR CIRCLE (NOC)

TPSODL

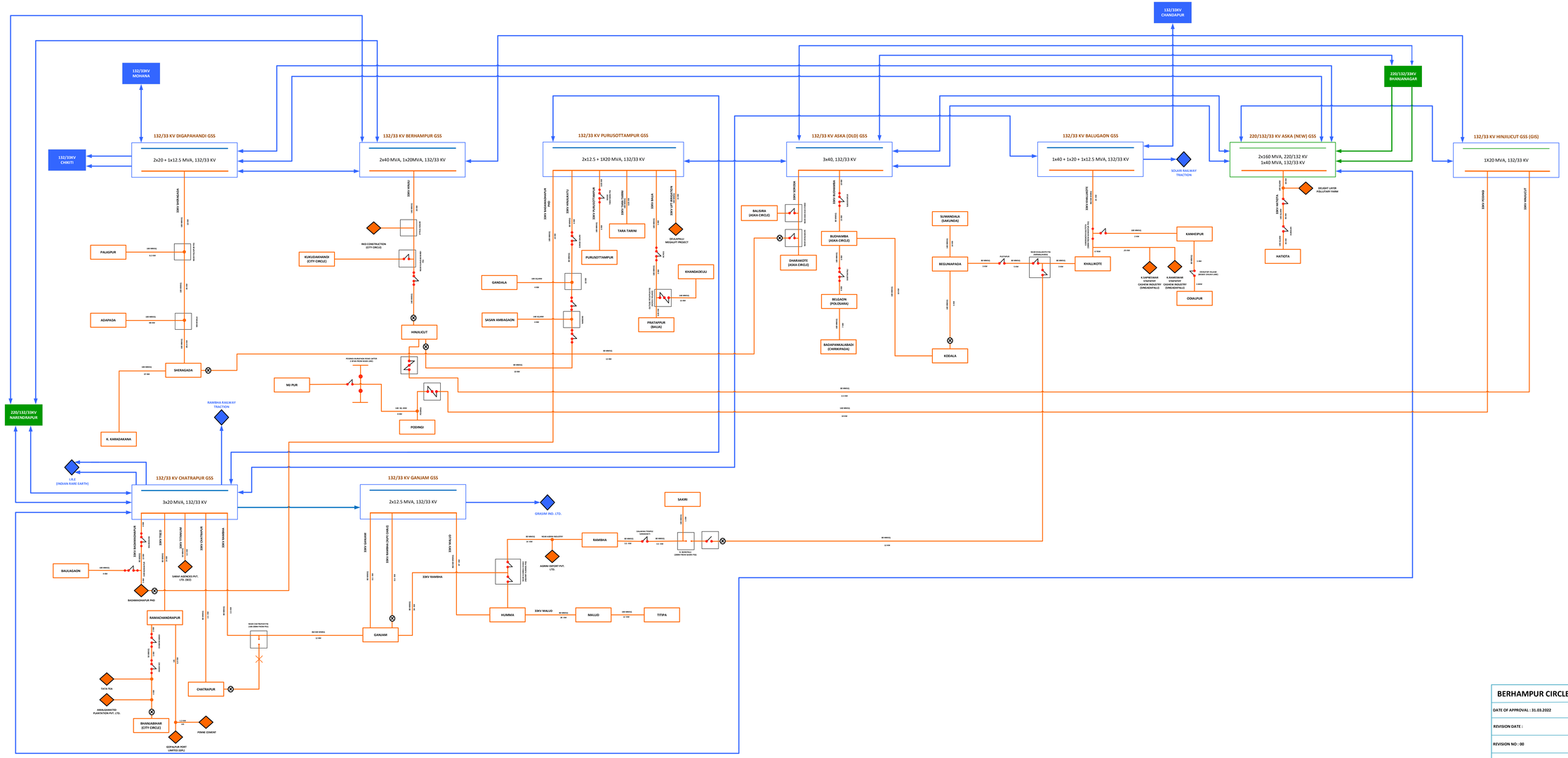

SL NO.	LEGENDS	DESCRIPTIONS
01		220/132/33KV (CR) 220/33KV GSS
02		132/33KV GSS
03		33/11KV PSS
04		220KV EHT CONSUMER
05		132KV EHT CONSUMER
06		33KV HT CONSUMER
07		220KV LINE
08		132KV LINE
09		33KV LINE
10		FOUR POLE STRUCTURE
11		SUPPLY DEAD
12		DOUBLE BREAK ISOLATOR
13		AIR BREAK SWITCH
14		DOUBLE POLE STRUCTURE
15		CUT POINT (JUMPER OPEN)
16		EARTH SWITCH
17		PROPOSED LINE/UNDER CONSTRUCTION
18		SINGLE POLE STRUCTURE
19		33/0.4KV DTR
20		SOLAR POWER STATION
21		HYDRO POWER STATION
22		NORMALLY OPEN POINT (NOP)

BERHAMPUR CIRCLE SCHEMATIC NETWORK DIAGRAM

DATE OF APPROVAL : 31.03.2022	DRAWN BY : BHARAT RATAN BARUN KUMAR ROUT & RANJAN KUMAR SAHOO
REVISION DATE :	CHECKED BY : RAVIKANT- HEAD PSCC
REVISION NO : 00	APPROVED BY : MILIND P. KULKARNI- CHIEF OPERATIONS

TPSODL - TEAM PSCC

© PROPERTY OF TP SOUTHERN ODISHA DISTRIBUTION LIMITED (TPSODL)

IMS DOC. - F(08)-TPSODL-10.35.06-SLD-04-BNJR

BHANJANAGAR CIRCLE (NOC)

TPSODL

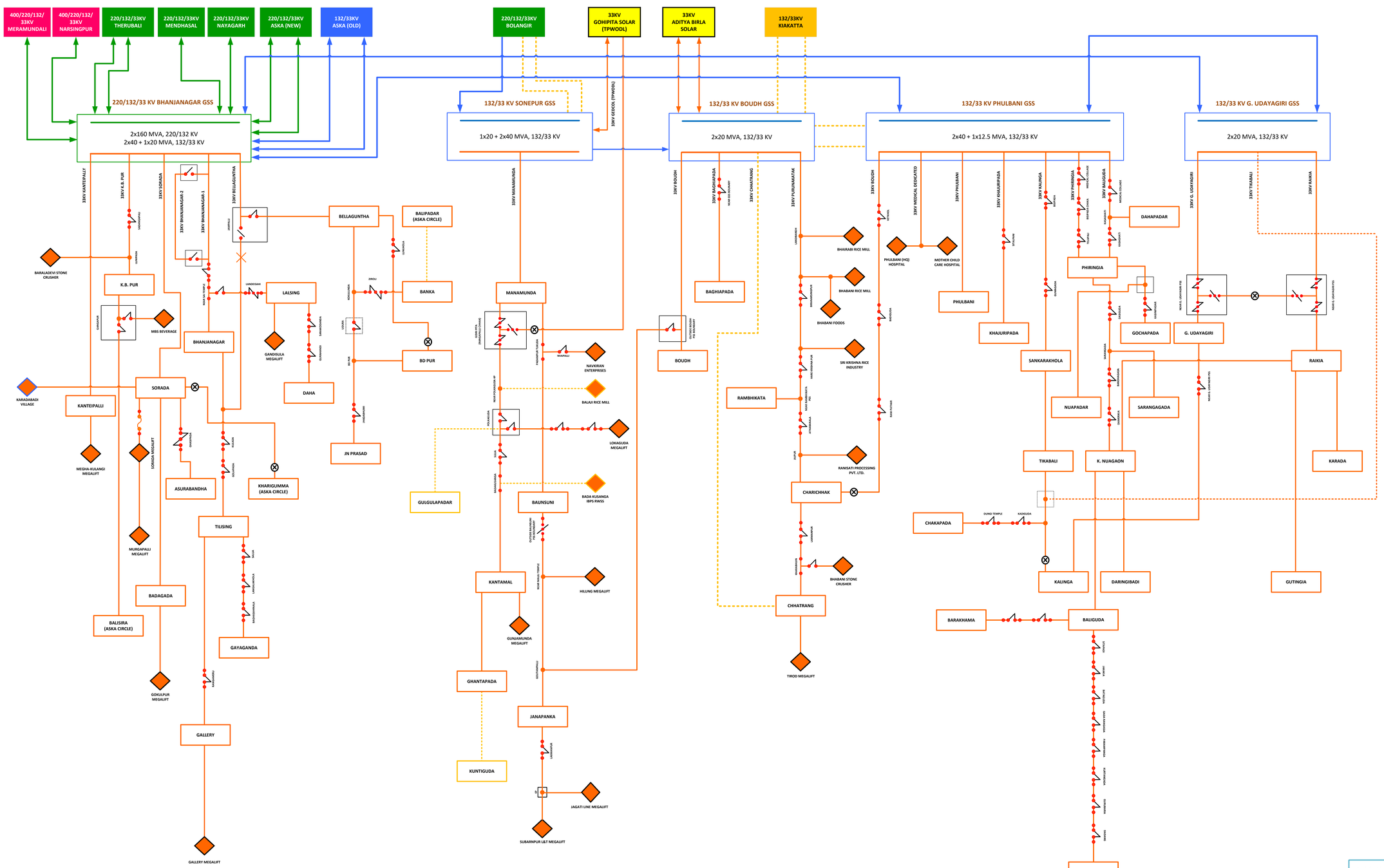

SL NO.	LEGENDS	DESCRIPTIONS
01		220/132/33KV (OR) 220/33KV GSS
02		132/33KV GSS
03		33/11KV PSS
04		220KV EHT CONSUMER
05		132KV EHT CONSUMER
06		33KV HT CONSUMER
07		220KV LINE
08		132KV LINE
09		33KV LINE
10		FOUR POLE STRUCTURE
11		SUPPLY DEAD
12		DOUBLE BREAK ISOLATOR
13		AIR BREAK SWITCH
14		DOUBLE POLE STRUCTURE
15		CUT POINT (JUMPER OPEN)
16		EARTH SWITCH
17		PROPOSED LINE/UNDER CONSTRUCTION
18		SINGLE POLE STRUCTURE
19		33/0.4KV DTR
20		SOLAR POWER STATION
21		HYDRO POWER STATION
22		NORMALLY OPEN POINT (NOP)
23		SIX POLE STRUCTURE

BHANJANAGAR CIRCLE SCHEMATIC NETWORK DIAGRAM

DATE OF APPROVAL : 31.03.2022	DRAWN BY : BHARAT RATAN BARUN KUMAR ROUT
REVISION DATE :	CHECKED BY : RAVIKANT- HEAD PSCC
REVISION NO : 00	APPROVED BY : MILIND P. KULKARNI- CHIEF OPERATIONS

TPSODL - TEAM PSCC

© PROPERTY OF TP SOUTHERN ODISHA DISTRIBUTION LIMITED (TPSODL)

IMS DOC. - F(08)-TPSODL-10.35.06-SLD-05-CITY

CITY CIRCLE (NOC)

TPSODL

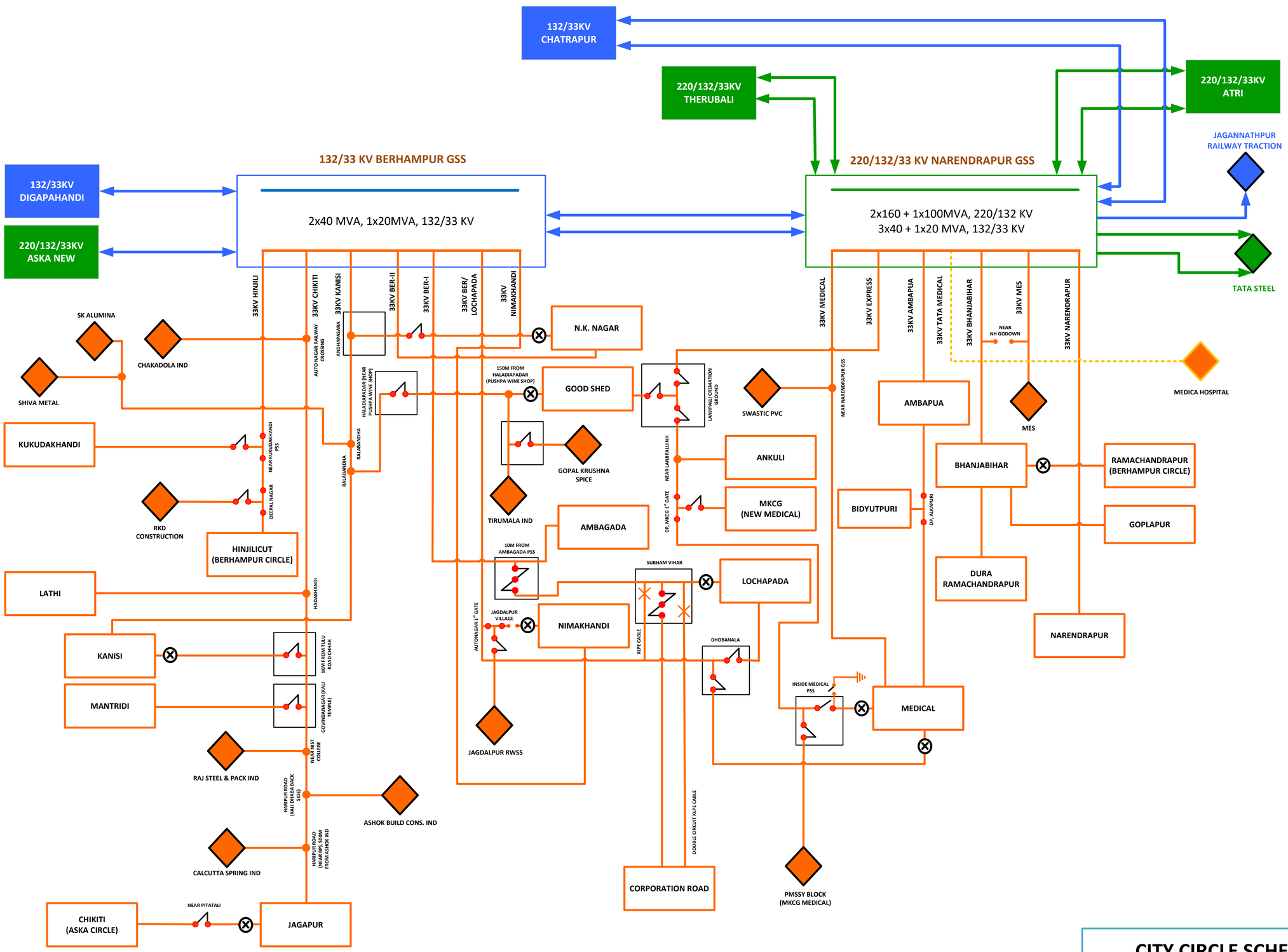

SL NO.	LEGENDS	DESCRIPTIONS
01		220/132/33KV (OR) 220/33KV GSS
02		132/33KV GSS
03		33/11KV PSS
04		220KV EHT CONSUMER
05		132KV EHT CONSUMER
06		33KV HT CONSUMER
07		220KV LINE
08		132KV LINE
09		33KV LINE
10		FOUR POLE STRUCTURE
11		SUPPLY DEAD
12		DOUBLE BREAK ISOLATOR
13		AIR BREAK SWITCH
14		DOUBLE POLE STRUCTURE
15		CUT POINT (JUMPER OPEN)
16		EARTH SWITCH
17		PROPOSED LINE/UNDER CONSTRUCTION
18		SINGLE POLE STRUCTURE
19		33/0.4KV DTR
20		SOLAR POWER STATION
21		HYDRO POWER STATION
22		NORMALLY OPEN POINT (NOP)

CITY CIRCLE SCHEMATIC NETWORK DIAGRAM

DATE OF APPROVAL : 31.03.2022	DRAWN BY : BHARAT RATAN BARUN KUMAR ROUT
REVISION DATE : 03.08.2022	CHECKED BY : RAVIKANT- HEAD PSCC
REVISION NO : 01	APPROVED BY : MILIND P. KULKARNI- CHIEF OPERATIONS

TPSODL - TEAM PSCC

© PROPERTY OF TP SOUTHERN ODISHA DISTRIBUTION LIMITED (TPSODL)

IMS DOC. - F(08)-TPSODL-10.35.06-SLD-06-JYPR

JEYPORE CIRCLE (NOC)

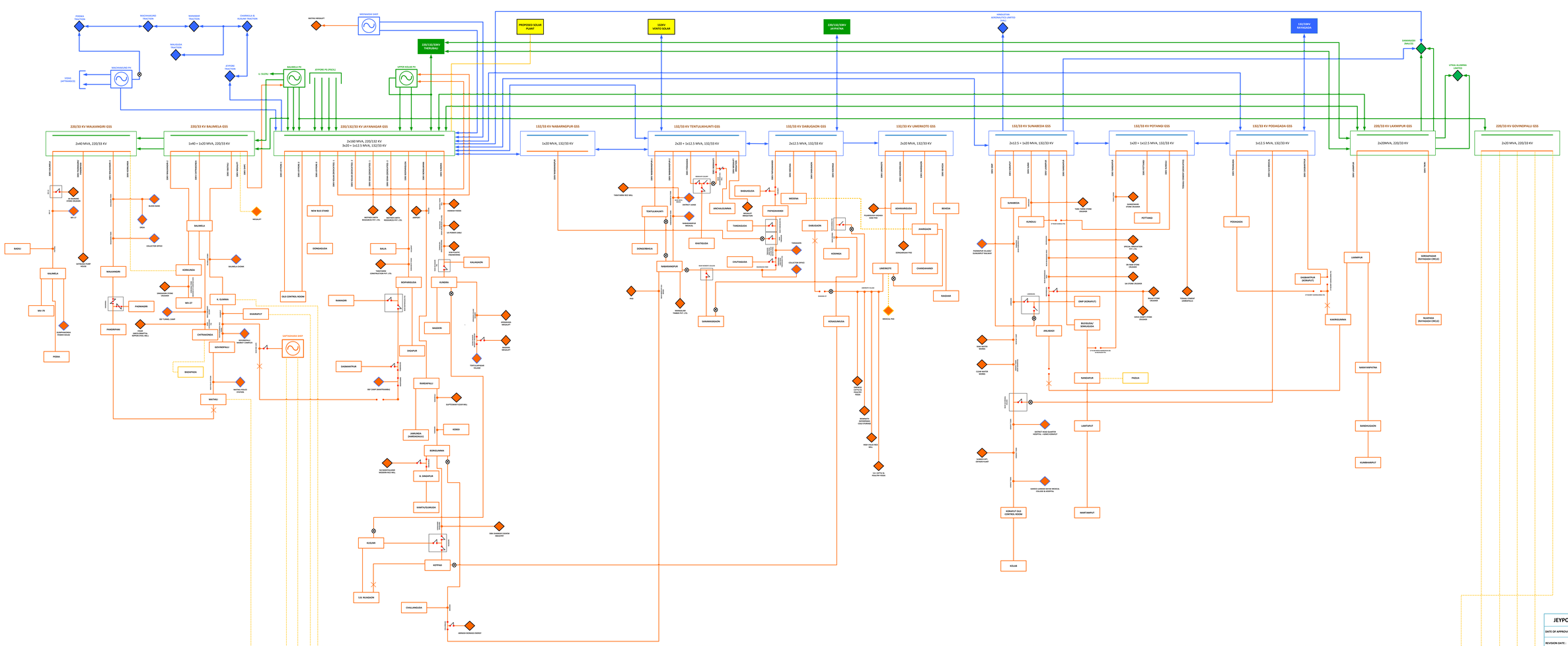

TPSODL

SL NO.	LEGENDS	DESCRIPTIONS
01		220/132/33KV GPS 220/33KV GSS
02		132/33KV GSS
03		33/11KV PSS
04		220KV EHT CONSUMER
05		132KV EHT CONSUMER
06		33KV HT CONSUMER
07		220KV LINE
08		132KV LINE
09		33KV LINE
10		FOUR POLE STRUCTURE
11		SUPPLY DEAD
12		DOUBLE BREAK ISOLATOR
13		AIR BREAK SWITCH
14		DOUBLE POLE STRUCTURE
15		CUT POINT (FUSIBLE OPEN)
16		EARTH SWITCH
17		PROPOSED LINE
18		SINGLE POLE STRUCTURE
19		3Ø/N 4KV VPR
20		SOLAR POWER STATION
21		HYDRO POWER STATION
22		NORMALLY OPEN POINT (NOP)

JEYPORE CIRCLE SCHEMATIC NETWORK DIAGRAM

DATE OF APPROVAL : 31.03.2022	DRAWN BY : BHARAT RATAN BARUN KUMAR ROUT
REVISION DATE :	CHECKED BY : RAVIKANT- HEAD PSCC
REVISION NO : 00	APPROVED BY : NIRJNO R- KULKARNI- CHIEF OPERATIONS

TPSODL - TEAM PSCC

© PROPERTY OF TP SOUTHERN ODISHA DISTRIBUTION LIMITED (TPSODL)

IMS DOC. - F(08)-TPSODL-10.35.06-SLD-07-RYGD

RAYAGADA CIRCLE (NOC)

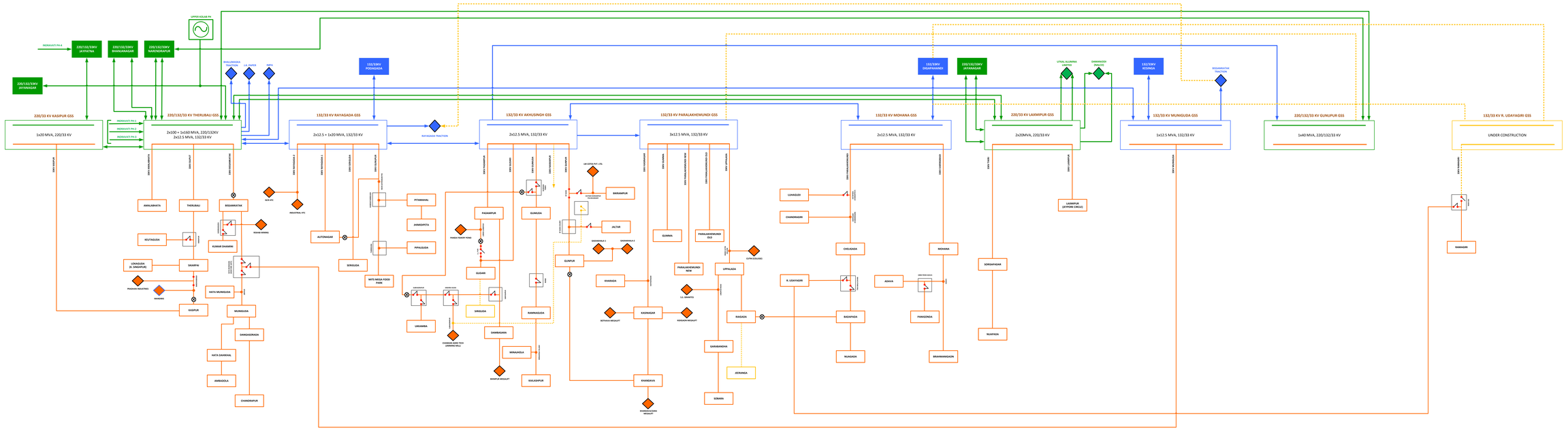

SL NO.	LEGENDS	DESCRIPTIONS
01		220/132/33KV (OR) 220/33KV GSS
02		132/33KV GSS
03		33/11KV PSS
04		220KV EHT CONSUMER
05		132KV EHT CONSUMER
06		33KV HT CONSUMER
07		220KV LINE
08		132KV LINE
09		33KV LINE
10		FOUR POLE STRUCTURE
11		SUPPLY LEAD
12		DOUBLE BREAK ISOLATOR
13		AIR BREAK SWITCH
14		DOUBLE POLE STRUCTURE
15		CUT POINT (JUMPER OPEN)
16		EARTH SWITCH
17		PROPOSED LINE/UNDER CONSTRUCTION
18		SINGLE POLE STRUCTURE
19		33/0.4KV DTR
20		SOLAR POWER STATION
21		HYDRO POWER STATION
22		NORMALLY OPEN POINT (NOP)
23		SIX POLE STRUCTURE

RAYAGADA CIRCLE SCHEMATIC NETWORK DIAGRAM

DATE OF APPROVAL : 31.03.2022	DRAWN BY : BHARAT RATAN BARUN KUMAR ROUT
REVISION DATE :	CHECKED BY : RAVIKANT -HEAD PSCC
REVISION NO : 00	APPROVED BY : MILIND P. KULKARNI- CHIEF OPERATIONS

TPSODL - TEAM PSCC

© PROPERTY OF TP SOUTHERN ODISHA DISTRIBUTION LIMITED (TPSODL)

ANNEXURE – 6

(Sample Input Energy data of

T<>D interface meters)

SUBSTATION	METERING POINT	METER NO.	Apr-22	May-22	June-22	July-23	Aug-23	Sept-23	Oct-23	Nov-23	Dec-23	Jan-23	Feb-23	Mar-23	FY 22-23
Aska	Trf1-40MVA 132/33kV	OPT01167	8.668040	8.921300	8.589450	8.551720	8.080100	7.815610	7.248440	6.660930	6.459600	6.465130	5.750200	7.042490	90.253010
Aska	Trf2-40MVA 132/33kV	OPT00961	8.473950	8.708760	8.424190	8.371760	8.024530	7.676960	7.096430	6.448050	6.349860	6.332390	5.632050	6.929120	88.468050
Aska	Trf3-40MVA 132/33kV	OPT01457	8.511050	8.699380	8.408440	8.278680	8.038340	7.621150	7.007270	6.525350	6.369980	6.321720	5.643320	6.822020	88.246700
Aska New (220/132/33)	Trf1-40MVA 132/33kV	OPT01811	7.490590	8.153540	7.925490	8.047800	7.724150	7.553400	7.144720	6.066740	5.885520	4.389940	3.684290	4.335600	78.401780
Aska New	Trf2-20MVA 132/33kV	OPT02377										1.570979	2.278740	2.699443	6.549162
Boudh	Trf1-20MVA 132/33kV	OPT01155	2.237700	2.233663	2.174023	2.057019	2.065151	1.952675	1.663070	1.404636	1.525932	1.678754	1.507094	1.742250	22.241967
Boudh	Trf2-20MVA 132/33kV	OPT00858	2.251524	2.247601	2.115573	2.067495	2.075616	1.962964	1.671427	1.411493	1.533736	1.687204	1.513693	1.741528	22.279854
Hinjili GIS	Trf1-20MVA 132/33kV	OPT02306						1.397827	5.425022	4.018355	3.127144	1.937985	1.923686	2.194099	20.024118
Hinjili GIS	Trf2-20MVA 132/33kV	OPT02379							0.000000	0.000000	0.492391	1.924114	2.004625	2.290046	6.711176
Malkangiri	Trf1-40MVA 220/33kV	OPT01779	4.531350	5.048610	4.622190	3.628010	4.111810	3.870700	3.701950	3.175240	3.195640	2.809980	1.568650	2.002680	42.266810
Malkangiri	Trf2-40MVA 220/33kV	OPT00710	4.580230	5.103440	4.671940	3.666650	4.156050	3.912880	3.754770	3.209560	3.230260	2.852700	1.598250	2.026150	42.762880

ANNEXURE – 7

(DTR metering data)

Main energy registers

History	Billing Dates	Active(I) Total	Reactive(I)-Active(I)	Reactive(E)-Active(I)	Apparent-Active(I) - type 2	2964984
History - 0	----	47027.52 kWh(I) Tot	176.12 kVArh(Lg)-Wh(I)	4022.67 kVArh(Ld)-Wh(I)	47050.32 kVAh-Wh(I)	
History - 1	01-Nov-22 12:00:00 AM	46819.055 kWh(I) Tot	176.12 kVArh(Lg)-Wh(I)	4003.97 kVArh(Ld)-Wh(I)	46841.855 kVAh-Wh(I)	
History - 2	01-Oct-22 12:00:00 AM	45416.84 kWh(I) Tot	176.115 kVArh(Lg)-Wh(I)	3882.95 kVArh(Ld)-Wh(I)	45439.63 kVAh-Wh(I)	
History - 3	01-Sep-22 12:00:00 AM	43955.77 kWh(I) Tot	176.115 kVArh(Lg)-Wh(I)	3718.59 kVArh(Ld)-Wh(I)	43978.555 kVAh-Wh(I)	
History - 4	01-Aug-22 12:00:00 AM	42429.66 kWh(I) Tot	176.115 kVArh(Lg)-Wh(I)	3552.2 kVArh(Ld)-Wh(I)	42452.44 kVAh-Wh(I)	
History - 5	01-Jul-22 12:00:00 AM	40902.2 kWh(I) Tot	175.785 kVArh(Lg)-Wh(I)	3399.985 kVArh(Ld)-Wh(I)	40924.9 kVAh-Wh(I)	
History - 6	01-Jun-22 12:00:00 AM	39620.96 kWh(I) Tot	175.775 kVArh(Lg)-Wh(I)	3246.035 kVArh(Ld)-Wh(I)	39643.66 kVAh-Wh(I)	

Main energy registers

History	Billing Dates	Active(I) Total	Reactive(I)-Active(I)	Reactive(E)-Active(I)	Apparent-Active(I) - type 2	2979648
History - 0	----	25450.04 kWh(I) Tot	4257.5 kVArh(Lg)-Wh(I)	649.46 kVArh(Ld)-Wh(I)	26440.46 kVAh-Wh(I)	
History - 1	01-Nov-22 12:00:00 AM	25257.1 kWh(I) Tot	4253.52 kVArh(Lg)-Wh(I)	637.96 kVArh(Ld)-Wh(I)	26246.28 kVAh-Wh(I)	
History - 2	01-Oct-22 12:00:00 AM	24022.9 kWh(I) Tot	4211.88 kVArh(Lg)-Wh(I)	581.26 kVArh(Ld)-Wh(I)	25003.58 kVAh-Wh(I)	
History - 3	01-Sep-22 12:00:00 AM	22403.82 kWh(I) Tot	4149.02 kVArh(Lg)-Wh(I)	545 kVArh(Ld)-Wh(I)	23376.3 kVAh-Wh(I)	
History - 4	01-Aug-22 12:00:00 AM	20732.46 kWh(I) Tot	4086.9 kVArh(Lg)-Wh(I)	499.9 kVArh(Ld)-Wh(I)	21696.18 kVAh-Wh(I)	
History - 5	01-Jul-22 12:00:00 AM	19277.42 kWh(I) Tot	4018.92 kVArh(Lg)-Wh(I)	474 kVArh(Ld)-Wh(I)	20233.72 kVAh-Wh(I)	
History - 6	01-Jun-22 12:00:00 AM	18224.64 kWh(I) Tot	3868.66 kVArh(Lg)-Wh(I)	467.6 kVArh(Ld)-Wh(I)	19146.78 kVAh-Wh(I)	

Main energy registers

History	Billing Dates	Active(I) Total	Reactive(I)-Active(I)	Reactive(E)-Active(I)	Apparent-Active(I) - type 2	2980710
History - 0	----	515.527 kWh(I) Tot	68.678 kVArh(Lg)-Wh(I)	1.7255 kVArh(Ld)-Wh(I)	524.1065 kVAh-Wh(I)	
History - 1	01-Nov-22 12:00:00 AM	512.754 kWh(I) Tot	68.3765 kVArh(Lg)-Wh(I)	1.701 kVArh(Ld)-Wh(I)	521.2945 kVAh-Wh(I)	
History - 2	01-Oct-22 12:00:00 AM	492.6925 kWh(I) Tot	65.5555 kVArh(Lg)-Wh(I)	1.6205 kVArh(Ld)-Wh(I)	500.8565 kVAh-Wh(I)	
History - 3	01-Sep-22 12:00:00 AM	465.9625 kWh(I) Tot	62.2305 kVArh(Lg)-Wh(I)	1.568 kVArh(Ld)-Wh(I)	473.7395 kVAh-Wh(I)	
History - 4	01-Aug-22 12:00:00 AM	439.302 kWh(I) Tot	58.6765 kVArh(Lg)-Wh(I)	1.5355 kVArh(Ld)-Wh(I)	446.6605 kVAh-Wh(I)	
History - 5	01-Jul-22 12:00:00 AM	412.089 kWh(I) Tot	54.6215 kVArh(Lg)-Wh(I)	1.507 kVArh(Ld)-Wh(I)	418.9435 kVAh-Wh(I)	
History - 6	01-Jun-22 12:00:00 AM	380.841 kWh(I) Tot	49.817 kVArh(Lg)-Wh(I)	1.4935 kVArh(Ld)-Wh(I)	387.126 kVAh-Wh(I)	

Main energy registers

History	Billing Dates	Active(I) Total	Reactive(I)-Active(I)	Reactive(E)-Active(I)	Apparent-Active(I) - type 2	2980760
History - 0	----	1702.5655 kWh(I) Tot	338.023 kVArh(Lg)-Wh(I)	1.0575 kVArh(Ld)-Wh(I)	1744.6475 kVAh-Wh(I)	
History - 1	01-Nov-22 12:00:00 AM	1694.4825 kWh(I) Tot	336.184 kVArh(Lg)-Wh(I)	1.0565 kVArh(Ld)-Wh(I)	1736.2825 kVAh-Wh(I)	
History - 2	01-Oct-22 12:00:00 AM	1630.9645 kWh(I) Tot	322.3785 kVArh(Lg)-Wh(I)	1.056 kVArh(Ld)-Wh(I)	1670.762 kVAh-Wh(I)	
History - 3	01-Sep-22 12:00:00 AM	1554.256 kWh(I) Tot	306.498 kVArh(Lg)-Wh(I)	1.056 kVArh(Ld)-Wh(I)	1592.007 kVAh-Wh(I)	
History - 4	01-Aug-22 12:00:00 AM	1477.7745 kWh(I) Tot	292.08 kVArh(Lg)-Wh(I)	1.056 kVArh(Ld)-Wh(I)	1513.7675 kVAh-Wh(I)	
History - 5	01-Jul-22 12:00:00 AM	1403.875 kWh(I) Tot	276.989 kVArh(Lg)-Wh(I)	1.056 kVArh(Ld)-Wh(I)	1437.958 kVAh-Wh(I)	
History - 6	01-Jun-22 12:00:00 AM	1324.03 kWh(I) Tot	260.2825 kVArh(Lg)-Wh(I)	1.056 kVArh(Ld)-Wh(I)	1355.946 kVAh-Wh(I)	

Main energy registers

History	Billing Dates	Active(I) Total	Reactive(I)-Active(I)	Reactive(E)-Active(I)	Apparent-Active(I) - type 2	2980820
History - 0	----	5370.3775 kWh(I) Tot	767.461 kVArh(Lg)-Wh(I)	14.0405 kVArh(Ld)-Wh(I)	5455.344 kVAh-Wh(I)	
History - 1	01-Nov-22 12:00:00 AM	5350.8565 kWh(I) Tot	765.933 kVArh(Lg)-Wh(I)	13.975 kVArh(Ld)-Wh(I)	5435.6645 kVAh-Wh(I)	
History - 2	01-Oct-22 12:00:00 AM	5215.5385 kWh(I) Tot	755.229 kVArh(Lg)-Wh(I)	12.6715 kVArh(Ld)-Wh(I)	5299.0935 kVAh-Wh(I)	
History - 3	01-Sep-22 12:00:00 AM	5062.133 kWh(I) Tot	743.3725 kVArh(Lg)-Wh(I)	11.2915 kVArh(Ld)-Wh(I)	5144.331 kVAh-Wh(I)	
History - 4	01-Aug-22 12:00:00 AM	4909.717 kWh(I) Tot	722.2515 kVArh(Lg)-Wh(I)	8.7315 kVArh(Ld)-Wh(I)	4988.8665 kVAh-Wh(I)	

History - 5	01-Jul-22 12:00:00 AM	4634.612 kWh(I) Tot	694.095 kVArh(Lg)-Wh(I)	4.621 kVArh(Ld)-Wh(I)	4710.529 kVAh-Wh(I)
History - 6	01-Jun-22 12:00:00 AM	4344.23 kWh(I) Tot	671.7765 kVArh(Lg)-Wh(I)	0.4395 kVArh(Ld)-Wh(I)	4417.423 kVAh-Wh(I)

Main energy registers

History	Billing Dates	Active(I) Total	Reactive(I)-Active(I)	Reactive(E)-Active(I)	Apparent-Active(I) - type 2	2981016
History - 0	----	2405.8055 kWh(I) Tot	322.9635 kVArh(Lg)-Wh(I)	0.1295 kVArh(Ld)-Wh(I)	2439.1925 kVAh-Wh(I)	
History - 1	01-Nov-22 12:00:00 AM	2386.565 kWh(I) Tot	321.2565 kVArh(Lg)-Wh(I)	0.123 kVArh(Ld)-Wh(I)	2419.791 kVAh-Wh(I)	
History - 2	01-Oct-22 12:00:00 AM	2250.4775 kWh(I) Tot	306.7005 kVArh(Lg)-Wh(I)	0.1165 kVArh(Ld)-Wh(I)	2282.3385 kVAh-Wh(I)	
History - 3	01-Sep-22 12:00:00 AM	2086.906 kWh(I) Tot	289.7005 kVArh(Lg)-Wh(I)	0.1125 kVArh(Ld)-Wh(I)	2117.303 kVAh-Wh(I)	
History - 4	01-Aug-22 12:00:00 AM	1919.629 kWh(I) Tot	273.255 kVArh(Lg)-Wh(I)	0.101 kVArh(Ld)-Wh(I)	1948.6365 kVAh-Wh(I)	
History - 5	01-Jul-22 12:00:00 AM	1764.9195 kWh(I) Tot	252.707 kVArh(Lg)-Wh(I)	0.101 kVArh(Ld)-Wh(I)	1791.891 kVAh-Wh(I)	
History - 6	01-Jun-22 12:00:00 AM	1597.472 kWh(I) Tot	227.911 kVArh(Lg)-Wh(I)	0.101 kVArh(Ld)-Wh(I)	1621.88 kVAh-Wh(I)	

Main energy registers

History	Billing Dates	Active(I) Total	Reactive(I)-Active(I)	Reactive(E)-Active(I)	Apparent-Active(I) - type 2	2981072
History - 0	----	2128.237 kWh(I) Tot	321.6395 kVArh(Lg)-Wh(I)	0.2915 kVArh(Ld)-Wh(I)	2166.0835 kVAh-Wh(I)	
History - 1	01-Nov-22 12:00:00 AM	2115.8615 kWh(I) Tot	320.1565 kVArh(Lg)-Wh(I)	0.2765 kVArh(Ld)-Wh(I)	2153.5165 kVAh-Wh(I)	
History - 2	01-Oct-22 12:00:00 AM	2024.6455 kWh(I) Tot	308.422 kVArh(Lg)-Wh(I)	0.231 kVArh(Ld)-Wh(I)	2060.812 kVAh-Wh(I)	
History - 3	01-Sep-22 12:00:00 AM	1918.7395 kWh(I) Tot	294.3275 kVArh(Lg)-Wh(I)	0.2285 kVArh(Ld)-Wh(I)	1953.302 kVAh-Wh(I)	
History - 4	01-Aug-22 12:00:00 AM	1811.996 kWh(I) Tot	280.338 kVArh(Lg)-Wh(I)	0.223 kVArh(Ld)-Wh(I)	1845.002 kVAh-Wh(I)	
History - 5	01-Jul-22 12:00:00 AM	1698.7555 kWh(I) Tot	266.0015 kVArh(Lg)-Wh(I)	0.2115 kVArh(Ld)-Wh(I)	1730.165 kVAh-Wh(I)	
History - 6	01-Jun-22 12:00:00 AM	1573.7285 kWh(I) Tot	247.42 kVArh(Lg)-Wh(I)	0.21 kVArh(Ld)-Wh(I)	1603.0105 kVAh-Wh(I)	

Main energy registers

History	Billing Dates	Active(I) Total	Reactive(I)-Active(I)	Reactive(E)-Active(I)	Apparent-Active(I) - type 2	2981190
History - 0	----	2895.1535 kWh(I) Tot	294.6275 kVArh(Lg)-Wh(I)	5.4765 kVArh(Ld)-Wh(I)	2923.6225 kVAh-Wh(I)	
History - 1	01-Nov-22 12:00:00 AM	2895.054 kWh(I) Tot	294.554 kVArh(Lg)-Wh(I)	5.4765 kVArh(Ld)-Wh(I)	2923.4985 kVAh-Wh(I)	
History - 2	01-Oct-22 12:00:00 AM	2894.3155 kWh(I) Tot	293.9845 kVArh(Lg)-Wh(I)	5.4765 kVArh(Ld)-Wh(I)	2922.5635 kVAh-Wh(I)	
History - 3	01-Sep-22 12:00:00 AM	2893.609 kWh(I) Tot	293.4495 kVArh(Lg)-Wh(I)	5.4765 kVArh(Ld)-Wh(I)	2921.6755 kVAh-Wh(I)	
History - 4	01-Aug-22 12:00:00 AM	2786.9125 kWh(I) Tot	283.241 kVArh(Lg)-Wh(I)	5.446 kVArh(Ld)-Wh(I)	2814.011 kVAh-Wh(I)	
History - 5	01-Jul-22 12:00:00 AM	2635.3245 kWh(I) Tot	268.075 kVArh(Lg)-Wh(I)	5.443 kVArh(Ld)-Wh(I)	2661.0525 kVAh-Wh(I)	
History - 6	01-Jun-22 12:00:00 AM	2475.769 kWh(I) Tot	250.5665 kVArh(Lg)-Wh(I)	5.442 kVArh(Ld)-Wh(I)	2499.875 kVAh-Wh(I)	

Main energy registers

History	Billing Dates	Active(I) Total	Reactive(I)-Active(I)	Reactive(E)-Active(I)	Apparent-Active(I) - type 2	2981229
History - 0	----	1213.047 kWh(I) Tot	107.8475 kVArh(Lg)-Wh(I)	1.5605 kVArh(Ld)-Wh(I)	1221.9765 kVAh-Wh(I)	
History - 1	01-Nov-22 12:00:00 AM	1206.8495 kWh(I) Tot	107.1835 kVArh(Lg)-Wh(I)	1.5535 kVArh(Ld)-Wh(I)	1215.7175 kVAh-Wh(I)	
History - 2	01-Oct-22 12:00:00 AM	1161.7995 kWh(I) Tot	101.57 kVArh(Lg)-Wh(I)	1.54 kVArh(Ld)-Wh(I)	1170.126 kVAh-Wh(I)	
History - 3	01-Sep-22 12:00:00 AM	1100.353 kWh(I) Tot	95.356 kVArh(Lg)-Wh(I)	1.5305 kVArh(Ld)-Wh(I)	1108.1695 kVAh-Wh(I)	
History - 4	01-Aug-22 12:00:00 AM	1042.431 kWh(I) Tot	89.2265 kVArh(Lg)-Wh(I)	1.5155 kVArh(Ld)-Wh(I)	1049.719 kVAh-Wh(I)	
History - 5	01-Jul-22 12:00:00 AM	981.027 kWh(I) Tot	82.8295 kVArh(Lg)-Wh(I)	1.503 kVArh(Ld)-Wh(I)	987.784 kVAh-Wh(I)	
History - 6	01-Jun-22 12:00:00 AM	900.0995 kWh(I) Tot	74.673 kVArh(Lg)-Wh(I)	1.5 kVArh(Ld)-Wh(I)	906.226 kVAh-Wh(I)	

Main energy registers

History	Billing Dates	Active(I) Total	Reactive(I)-Active(I)	Reactive(E)-Active(I)	Apparent-Active(I) - type 2	2981248
History - 0	----	629.131 kWh(I) Tot	218.2515 kVArh(Lg)-Wh(I)	0.0085 kVArh(Ld)-Wh(I)	675.6845 kVAh-Wh(I)	
History - 1	01-Nov-22 12:00:00 AM	623.921 kWh(I) Tot	216.4445 kVArh(Lg)-Wh(I)	0.0085 kVArh(Ld)-Wh(I)	670.1145 kVAh-Wh(I)	
History - 2	01-Oct-22 12:00:00 AM	598.4525 kWh(I) Tot	206.749 kVArh(Lg)-Wh(I)	0.0085 kVArh(Ld)-Wh(I)	642.4515 kVAh-Wh(I)	

History - 3	01-Sep-22 12:00:00 AM	559.513 kWh(I) Tot	194.7665 kVArh(Lg)-Wh(I)	0.0085 kVArh(Ld)-Wh(I)	601.3775 kVAh-Wh(I)
History - 4	01-Aug-22 12:00:00 AM	519.0325 kWh(I) Tot	182.7395 kVArh(Lg)-Wh(I)	0.0085 kVArh(Ld)-Wh(I)	558.749 kVAh-Wh(I)
History - 5	01-Jul-22 12:00:00 AM	470.47 kWh(I) Tot	167.7605 kVArh(Lg)-Wh(I)	0.0085 kVArh(Ld)-Wh(I)	507.491 kVAh-Wh(I)
History - 6	01-Jun-22 12:00:00 AM	428.735 kWh(I) Tot	155.2895 kVArh(Lg)-Wh(I)	0.0085 kVArh(Ld)-Wh(I)	463.609 kVAh-Wh(I)

Main energy registers

History	Billing Dates	Active(I) Total	Reactive(I)-Active(I)	Reactive(E)-Active(I)	Apparent-Active(I) - type 2 2981259
History - 0	----	2532.133 kWh(I) Tot	191.442 kVArh(Lg)-Wh(I)	6.4865 kVArh(Ld)-Wh(I)	2547.433 kVAh-Wh(I)
History - 1	01-Nov-22 12:00:00 AM	2518.634 kWh(I) Tot	190.6615 kVArh(Lg)-Wh(I)	6.419 kVArh(Ld)-Wh(I)	2533.8635 kVAh-Wh(I)
History - 2	01-Oct-22 12:00:00 AM	2420.3045 kWh(I) Tot	182.775 kVArh(Lg)-Wh(I)	6.249 kVArh(Ld)-Wh(I)	2434.859 kVAh-Wh(I)
History - 3	01-Sep-22 12:00:00 AM	2300.683 kWh(I) Tot	173.9115 kVArh(Lg)-Wh(I)	6.1535 kVArh(Ld)-Wh(I)	2314.523 kVAh-Wh(I)
History - 4	01-Aug-22 12:00:00 AM	2178.62 kWh(I) Tot	166.283 kVArh(Lg)-Wh(I)	6.0045 kVArh(Ld)-Wh(I)	2191.851 kVAh-Wh(I)
History - 5	01-Jul-22 12:00:00 AM	2052.7845 kWh(I) Tot	156.448 kVArh(Lg)-Wh(I)	5.957 kVArh(Ld)-Wh(I)	2065.258 kVAh-Wh(I)
History - 6	01-Jun-22 12:00:00 AM	1907.93 kWh(I) Tot	142.98 kVArh(Lg)-Wh(I)	5.954 kVArh(Ld)-Wh(I)	1919.3795 kVAh-Wh(I)

Main energy registers

History	Billing Dates	Active(I) Total	Reactive(I)-Active(I)	Reactive(E)-Active(I)	Apparent-Active(I) - type 2 2981281
History - 0	----	1881.283 kWh(I) Tot	132.5295 kVArh(Lg)-Wh(I)	3.2895 kVArh(Ld)-Wh(I)	1891.852 kVAh-Wh(I)
History - 1	01-Nov-22 12:00:00 AM	1870.773 kWh(I) Tot	132.008 kVArh(Lg)-Wh(I)	3.1935 kVArh(Ld)-Wh(I)	1881.2925 kVAh-Wh(I)
History - 2	01-Oct-22 12:00:00 AM	1795.8935 kWh(I) Tot	127.2045 kVArh(Lg)-Wh(I)	2.895 kVArh(Ld)-Wh(I)	1805.985 kVAh-Wh(I)
History - 3	01-Sep-22 12:00:00 AM	1691.042 kWh(I) Tot	122.1325 kVArh(Lg)-Wh(I)	2.641 kVArh(Ld)-Wh(I)	1700.7105 kVAh-Wh(I)
History - 4	01-Aug-22 12:00:00 AM	1585.46 kWh(I) Tot	117.011 kVArh(Lg)-Wh(I)	2.3945 kVArh(Ld)-Wh(I)	1594.711 kVAh-Wh(I)
History - 5	01-Jul-22 12:00:00 AM	1479.7955 kWh(I) Tot	110.102 kVArh(Lg)-Wh(I)	2.343 kVArh(Ld)-Wh(I)	1488.507 kVAh-Wh(I)
History - 6	01-Jun-22 12:00:00 AM	1364.4945 kWh(I) Tot	101.448 kVArh(Lg)-Wh(I)	2.333 kVArh(Ld)-Wh(I)	1372.57 kVAh-Wh(I)

Main energy registers

History	Billing Dates	Active(I) Total	Reactive(I)-Active(I)	Reactive(E)-Active(I)	Apparent-Active(I) - type 2 2981294
History - 0	----	1484.2955 kWh(I) Tot	153.314 kVArh(Lg)-Wh(I)	12.468 kVArh(Ld)-Wh(I)	1505.5195 kVAh-Wh(I)
History - 1	01-Nov-22 12:00:00 AM	1477.1625 kWh(I) Tot	152.328 kVArh(Lg)-Wh(I)	12.2375 kVArh(Ld)-Wh(I)	1498.2035 kVAh-Wh(I)
History - 2	01-Oct-22 12:00:00 AM	1422.6235 kWh(I) Tot	145.219 kVArh(Lg)-Wh(I)	11.2275 kVArh(Ld)-Wh(I)	1442.479 kVAh-Wh(I)
History - 3	01-Sep-22 12:00:00 AM	1356.999 kWh(I) Tot	137.6245 kVArh(Lg)-Wh(I)	10.6405 kVArh(Ld)-Wh(I)	1375.772 kVAh-Wh(I)
History - 4	01-Aug-22 12:00:00 AM	1289.3545 kWh(I) Tot	130.4155 kVArh(Lg)-Wh(I)	9.9325 kVArh(Ld)-Wh(I)	1307.0965 kVAh-Wh(I)
History - 5	01-Jul-22 12:00:00 AM	1216.393 kWh(I) Tot	122.8425 kVArh(Lg)-Wh(I)	9.295 kVArh(Ld)-Wh(I)	1233.07 kVAh-Wh(I)
History - 6	01-Jun-22 12:00:00 AM	1140.805 kWh(I) Tot	114.446 kVArh(Lg)-Wh(I)	9.0205 kVArh(Ld)-Wh(I)	1156.348 kVAh-Wh(I)

Main energy registers

History	Billing Dates	Abs Active Total	Abs Reactive(Lag)	Abs Reactive(Lead)	Abs Apparent	Abs Active SOSD2236
History - 0	----	359.915 kWh Abs	233.245 kVArh+ Abs	0.125 kVArh- Abs	476.58 kVAh Abs	359.905 kWh Abs
History - 1	01-Nov-22 12:00:00 AM	357.52 kWh Abs	231.655 kVArh+ Abs	0.125 kVArh- Abs	473.395 kVAh Abs	357.51 kWh Abs
History - 2	01-Oct-22 12:00:00 AM	343.55 kWh Abs	218.06 kVArh+ Abs	0.125 kVArh- Abs	451.815 kVAh Abs	343.525 kWh Abs
History - 3	01-Sep-22 12:00:00 AM	328.355 kWh Abs	207.19 kVArh+ Abs	0.125 kVArh- Abs	431.095 kVAh Abs	328.32 kWh Abs
History - 4	01-Aug-22 12:00:00 AM	312.06 kWh Abs	196.885 kVArh+ Abs	0.125 kVArh- Abs	409.935 kVAh Abs	312.015 kWh Abs
History - 5	01-Jul-22 12:00:00 AM	293.735 kWh Abs	186.075 kVArh+ Abs	0.125 kVArh- Abs	386.705 kVAh Abs	293.68 kWh Abs
History - 6	01-Jun-22 12:00:00 AM	271.465 kWh Abs	172.865 kVArh+ Abs	0.125 kVArh- Abs	358.645 kVAh Abs	271.405 kWh Abs
History - 7	01-May-22 12:00:00 AM	250.625 kWh Abs	161.41 kVArh+ Abs	0.125 kVArh- Abs	332.685 kVAh Abs	250.565 kWh Abs
History - 8	01-Apr-22 12:00:00 AM	231.66 kWh Abs	151.51 kVArh+ Abs	0.125 kVArh- Abs	309.195 kVAh Abs	231.605 kWh Abs
History - 9	01-Mar-22 12:00:00 AM	214.23 kWh Abs	141.49 kVArh+ Abs	0.125 kVArh- Abs	287.23 kVAh Abs	214.175 kWh Abs

History - 10	01-Feb-22 12:00:00 AM	198.985 kWh Abs	131.435 kVArh+ Abs	0.125 kVArh- Abs	266.99 kVAh Abs	198.93 kWh Abs
History - 11	01-Jan-22 12:00:00 AM	183.485 kWh Abs	120.765 kVArh+ Abs	0.125 kVArh- Abs	245.91 kVAh Abs	183.445 kWh Abs
History - 12	01-Dec-21 12:00:00 AM	168.005 kWh Abs	109.175 kVArh+ Abs	0.125 kVArh- Abs	224.255 kVAh Abs	167.965 kWh Abs

ANNEXURE – 8

(Foot survey data)

Details of Enforcement Activities of Electrical Circles under TPSODL for April 2022 to March 2023												
			Tampered		Direct Theft		Unauthorized Use Of Electricity					
		No. of Cons. Checked	Cases	Total Connected Load in Kw	Cases	Total Connected Load in Kw	Unauthorized Use Of Electricity	Total Connected Load in Kw	Nos. of final asst. (B)	Final asst. Amts(B1)	No. of Cons. Paid	Coll. Amts
Apr.'22 to Mar.'23	Aska	7782	2107	4572.225	1053	2408.95	49	101.503	4565	580.30487	2729	231.81277
	Bhanjnagar	4794	1100	2577.978	2468	4976.4928	561	1289.715	3962	482.24333	3492	298.53928
	City Circle	12607	277	1245.45	552	1119.715	1646	4432.552	1425	196.29659	1635	159.8752
	Berhampur	5643	3434	7793.028	2096	4470.2025	82	211.744	4238	606.64122	3609	310.51522
	Rayagada	2864	147	357.788	1809	3003.747	627	1514.96	1050	127.34063	1669	158.69631
	Jeypore	22982	203	720.731	4804	10251.4201	1094	3020.904	5108	986.37255	2777	253.90934
	Total	**56672**	7268	**17267.2**	12782	**26230.5274**	4059	**10571.378**	**20348**	**2979.20**	**15911**	**1413.35**

ANNEXURE – 9

(Metering Status data)

Metering status of various category consumers

Agriculture Consumers:

Consumer Number	NAME	Metering Status	Connection Status	Feeder Code	11kV Feeder Code
341001030639	M/S. INDIAN OCEAN HATCHERY	Functional	AMI	SEC21-F02	HARIPUR
341000000100	SRI. SUSANTA KUMAR DASH	Functional	AMI	SEC21-F01	NARAYANPUR
341001030606	RAGHUMANI GOUDA	Functional	AMI	SEC03-F04	KARAPALLI
341001030660	A CHANYA REDDY	Functional	AMI	SEC21-F01	NARAYANPUR
341001021098	SRI. SUDHANSU TRIPATHY	Functional	AMI	SEC03-F04	KARAPALLI
341001030657	SRI MANOJ KUMAR PRADHAN	Functional	AMI	SEC02-F04	TANGANAPALLI
341001030658	M/S. TUNA POLUTRY PRIVATE LIMITED	Functional	AMI	SEC02-F03	JHADANKULI
341001030612	M\S SAPTAMUKHI AQUATICS	Functional	AMI	SEC21-F02	HARIPUR
341001021133	GANESH REDDY	Functional	AMI	SEC21-F01	NARAYANPUR

Government Category Consumers:

Consumer Number	NAME	Metering Status	Connection Status	Feeder Code	11kV Feeder Code
211001080054	MARDARAJ SISHU UDYAN	Functional	AMI	SEB05-F01	KHALLIKOTE TOWN
351301341061	THE H M JUDHISTRA PRATHMIKA BIDYALA	Functional	AMI	SEA05-F04	COLLEGE SQUARE
351103600206	THE HEAD MASTER	Functional	AMI	SEA04-F01	BARADABILI
214001020520	THE STATION OFFICER	Functional	AMI	SEB23-F01	KODALA
341001020845	THE SUPERTENDENT OF POLICE	Functional	AMI	SEC10-F02	MKCG HOSPITAL
341000000079	THE SUPERINTENDENT OF MKCG	Functional	AMI	SEC10-F02	MKCG HOSPITAL
341203010181	HEAD MASTER	Functional	AMI	SEC09-F02	AMBAPUA
341001020107	EXECUTIVE ENGINEER	Functional	AMI	SEC05-F04	ANKULI NH
341001021225	DIVISIONAL HEAD CIVIL IDCO	Functional	AMI	SEC06-F01	ANKULI
341401280458	A.D.M.O. (F.W)	Functional	AMI	SEC08-F07	OLD BUS STAND

LT Industrial Consumers:

Consumer Number	NAME	Metering Status	Connection Status	Feeder Code	11kV Feeder Code
341001040027	M/S BALAJI PLASTICS	Functional	AMI	SEC06-F01	ANKULI
341001040219	M/S BIMALA BRICK INDUSTRY	Functional	AMI	SEC02-F04	TANGANAPALLI
341001040080	MAHENDRA KUMAR PATRO	Functional	AMI	SEC02-F03	JHADANKULI
341001040045	SRI B. JAGANNATHA RAO	Functional	AMI	SEC06-F01	ANKULI
341001050299	M\S SHIVA FLY ASK BRICK IND.	Functional	AMI	SEC02-F04	TANGANAPALLI
341001040181	TARATARINI FLOOR MILL	Functional	AMI	SEC02-F04	TANGANAPALLI
341001040208	M/S R.R. TYRES	Functional	AMI	SEC02-F06	RAGHUNATHPUR
341001040180	SRI. AMARJIT PATTNAIK	Functional	AMI	SEC05-F04	ANKULI NH
341001040081	SRI CHAKRAPANI SAHU	Functional	AMI	SEC02-F05	NARENDRAPUR
341001040067	T. BALARAMKRISHNA	Functional	AMI	SEC02-F06	RAGHUNATHPUR

ANNEXURE – 10

(Pro-forma)

General Information

1	**Name of the DISCOM**	TP SOUTHERN ODISHA DISTRIBUTION LIMITED (erstwhile		
2	**i) Year of Establishment**	2021 (erstwhile SOUTHCO 1997)		
	ii) Government/Public/Private			
3	**DISCOM's Contact details & Address**			
i	City/Town/Village	Berhampur		
ii	District	Ganjam		
iii	State	Odisha	Pin	760004
iv	Telephone		Fax	
4	**Registered Office**			
i	Company's Chief Executive Name	Mr. Arvind Singh		
ii	Designation	Chief Executive Officer		
iii	Address	Kamapalli, Courtpeta		
iv	City/Town/Village	Berhampur	P.O.	Medical Campus
v	District	Ganjam		
vi	State	Odisha	Pin	760004
vii	Telephone		Fax	
5	**Nodal Officer Details***			
i	Nodal Officer Name (Designated at DISCOM's)	Mr. Saumitro Banerjee		
ii	Designation	Head		
iii	Address	Kamapalli, Courtpeta		
iv	City/Town/Village	Berhampur	P.O.	Medical Campus
v	District	Ganjam		
vi	State	odisha	Pin	760004
vii	Telephone	Odisha	Fax	
6	**Energy Manager Details***			
i	Name	Mr. Ratan Kuber		
ii	Designation	Lead Engineer	Whether EA or EM	EM
iii	EA/EM Registration No.	EA-32475/21		
iv	Telephone		Fax	
v	Mobile	9777333245	E-mail ID	energyaudit@tpsouthernodisha.com
7	**Period of Information**			
	Year of (FY) information including Date and Month (Start & End)	1st Apr, 2022 - 31st March, 2023		

Performance Summary of Electricity Distribution Companies			
1	Period of Information Year of (FY) information including Date and Month (Start & End)	1st Apr, 2022 - 31st March, 2023	
2	**Technical Details**		
(a)	**Energy Input Details**		
(i)	Input Energy Purchase (From Generation Source)	Million kwh	4203.95
(ii)	Net input energy (at DISCOM Periphery after adjusting the transmission losses and energy traded)	Million kwh	4203.94
(iii)	Total Energy billed (is the Net energy billed, adjusted for energy traded))	Million kwh	3154.46
(b)	Transmission and Distribution (T&D) loss Details	Million kwh	1049.49
		%	24.96%
	Collection Efficiency	%	99%
(c)	Aggregate Technical & Commercial Loss	%	26%

I/We undertake that the information supplied in this Document and Pro-forma is accurate to the best of my knowledge and if any of the information supplied is found to be incorrect and such information result into loss to the Central Government or State Government or any of the authority under them or any other person affected, I/we undertake to indemnify such loss.

Authorised Signatory and Seal

Name of Authorised Signatory: Vijay Parkash Sharma
Chief Commercial Services
TPSODL,Berhampur,Gm

Name of the DISCOM:

Full Address:-

Signature:-

Name of Energy Manager*:

Registration Number: RATAN KUMAR
EA-32475/24

Seal

Form-Details of Input Infrastructure

1	Parameters	Total	Covered during in audit	Verified by Auditor in Sample Check	Remarks (Source of data)
i	Number of circles	6			
ii	Number of divisions	19			
iii	Number of sub-divisions	51			
iv	Number of feeders	1036			
v	Number of DTs	58179			
vi	Number of consumers	2341493			
2	**Parameters**	**66kV and above**	**33kV**	**11/22kV**	**LT**
a. i.	Number of conventional metered consumers	18	124	1279	2292620
ii	Number of consumers with 'smart' meters	0	0	4387	43065
iii	Number of consumers with 'smart prepaid' meters	0	0	0	11121
iv	Number of consumers with 'AMR' meters	0	0	0	0
v	Number of consumers with 'non-smart prepaid' meters	0	0	0	0
vi	Number of unmetered consumers	0	0	0	0
vii	**Number of total consumers**	18	124	5666	2335685
b.i.	Number of conventionally metered Distribution Transformers	NA	NA	NA	0
ii	Number of DTs with communicable meters	NA	NA	NA	1088
iii	Number of unmetered DTs	NA	NA	NA	57091
iv	**Number of total Transformers**				58179
c.i.	Number of metered feeders	0	0	0	
ii	Number of feeders with communicable meters	0	97	713	
iii	Number of unmetered feeders	0	33	193	
iv	**Number of total feeders**	0	130	906	
d.	Line length (ct km)	89572.67			
e.	Length of Aerial Bunched Cables	31098.41			
f.	Length of Underground Cables	105.85			

3	Voltage level	Particulars	MU	Reference	Remarks (Source of data)
i	66kV and above	Long-Term Conventional	4,204	Includes input energy for franchisees	
		Medium Conventional			
		Short Term Conventional			
		Banking			
		Long-Term Renewable energy			
		Medium and Short-Term RE		Includes power from bilateral/ PX/ DEEP	
		Captive, open access input		Any power wheeled for any purchase other than sale to DISCOM. Does not include input for franchisee.	
		Sale of surplus power			
		Quantum of inter-state transmission loss		As confirmed by SLDC, RLDC etc	
		Power procured from inter-state sources	4,204	Based on data from Form 5	
		Power at state transmission boundary	4,204		
		Long-Term Conventional			
		Medium Conventional			
		Short Term Conventional			

ii	33kV	Banking			
		Long-Term Renewable energy			
		Medium and Short-Term RE			
		Captive, open access input			
		Sale of surplus power			
		Quantum of intra-state transmission loss	0		
		Power procured from intra-state sources	0		
iii		**Input in DISCOM wires network**	4,204		
iv	33 kV	Renewable Energy Procurement			
		Small capacity conventional/ biomass/ hydro plants Procurement			
		Captive, open access input			
v	11 kV	Renewable Energy Procurement			
		Small capacity conventional/ biomass/ hydro plants Procurement			
		Sales Migration Input			
vi	LT	Renewable Energy Procurement			
		Sales Migration Input			
vii		**Energy Embedded within DISCOM wires network**	0		
viii		**Total Energy Available/ Input**	4,204		
4	**Voltage level**	**Energy Sales Particulars**	**MU**	**Reference**	
i	LT Level	DISCOM' consumers	2,029	Include sales to consumers in franchisee areas, unmetered consumers	
		Demand from open access, captive		Non DISCOM's sales	
		Embedded generation used at LT level		Demand from embedded generation at LT level	
		Sale at LT level	2,029		
		Quantum of LT level losses	637		
		Energy Input at LT level	2,666		
ii	11 kV Level	DISCOM' consumers	315	Include sales to consumers in franchisee areas, unmetered consumers	
		Demand from open access, captive		Non DISCOM's sales	
		Embedded generation at 11 kV level used		Demand from embedded generation at 11kV level	
		Sales at 11 kV level	315		
		Quantum of Losses at 11 kV	278		
		Energy input at 11 kV level	593		
iii	33 kV Level	DISCOM' consumers	105	Include sales to consumers in franchisee areas, unmetered consumers	
		Demand from open access, captive		Non DISCOM's sales	
		Embedded generation at 33 kV or below level		This is DISCOM and OA demand met via energy generated at same voltage level	
		Sales at 33 kV level	105		
		Quantum of Losses at 33 kV	135		
		Energy input at 33kV Level	239		
iv	> 33 kV	DISCOM' consumers	705.6845867	Include sales to consumers in franchisee areas, unmetered consumers	
		Demand from open access, captive		Non DISCOM's sales	
		Cross border sale of energy			
		Sale to other DISCOMs			
		Banking			
		Energy input at > 33kV Level	706		
		Sales at 66kV and above (EHV)	706		
		Total Energy Requirement	**4,204**		

		Total Energy Sales	3,154		
		Energy Accounting Summary			
5	DISCOM	Input (in MU)	Sale (in MU)	Loss (in MU)	Loss %
i	LT	2665.97	2029.190244	636.7797557	23.88548092
ii	11 Kv	592.860539	314.6871158	278.17	8.535884167
iii	33 kv	239.4389931	104.8957053	134.54	3.845901488
iv	> 33 kv	705.68	705.68	0	0
6	Open Access, Captive	Input (in MU)	Sale (in MU)	Loss (in MU)	
i	LT				
ii	11 Kv				
iii	33 kv				
iv	> 33 kv				

Loss Estimation for DISCOM	
T&D loss	1,049
D loss	1,049
T&D loss (%)	0.249641377
D loss (%)	0.249644346

Details of Division Wise Losses (See note below**)

Division Wise Losses

Period For Apr'22 To Mar'23

S.No	Name of circle	Circle code	Name of Division	Consumer category	Consumer profile: No of connection metered (Nos)	No of connection Un-metered	Total Number of connections	% of number of connections	Connected Load metered (MW)	Connected Load Un-metered (MW)	Total Connected Load (MW)	% of connected load	Energy parameters: Input energy (MU)	Billed energy (MU): Metered energy	Unmetered/assessment energy	Total energy	% of energy consumption	Losses: T&D loss (MU)	T&D loss (%)	Commercial Parameter: Billed Amount in Rs. Crore	Collected Amount in Rs. Crore	Collection Efficiency	AT & C loss (%)
1	35	ASKA	AED-I	Residential	60809	0	60809	94%	61.250	0	61.25021	74%	147.8973	40.290	0	40.28951	63%	83.70041	57%	17.308	16.021	92.57%	
				Agricultural	597	0	597	1%	4.856	0	4.855989	6%		4.145	0	4.14503	6%			0.870	0.733	84.21%	
				Commercial/Ind	2516	0	2516	4%	12.185	0	12.18504	15%		10.204	0	10.20387	16%			8.003	9.151	114.35%	
				Commercial/Ind	5	0	5	0%	1.077	0	1.0766	1%		0.916	0	0.915628	1%			0.975	1.048	107.53%	
				Others	767	0	767	1%	3.152	0	3.152495	4%		8.643	0	8.642874	13%			5.522	6.273	113.61%	
Sub-total					**64694**	**0**	**64694**	**100%**	**82.52034**	**0**	**82.52034**	**100%**	**147.8973**	**64.19691**	**0**	**64.19691**	**100%**	**83.70041**	**57%**	**32.6772**	**33.226**	**101.68%**	**56%**
2	35	ASKA	AED-II	Residential	62852	0	62852	95%	77.646	0	77.64628	82%	126.3407	38.756	0	38.7563	70%	71.2633	56%	16.906	14.385	85.09%	
				Agricultural	590	0	590	1%	2.717	0	2.717389	3%		1.602	0	1.601815	3%			0.327	0.311	95.06%	
				Commercial/Ind	2134	0	2134	3%	10.790	0	10.79045	11%		9.206	0	9.20556	17%			7.083	7.466	105.40%	
				Commercial/Ind	6	0	6	0%	1.565	0	1.5645	2%		1.561	0	1.560877	3%			1.579	1.713	108.47%	
				Others	643	0	643	1%	2.003	0	2.002979	2%		3.953	0	3.952891	7%			2.619	2.720	103.85%	
Sub-total					**66225**	**0**	**66225**	**100%**	**94.7216**	**0**	**94.7216**	**100%**	**126.3407**	**55.07744**	**0**	**55.07744**	**100%**	**71.2633**	**56%**	**28.51533**	**26.595**	**93.27%**	**59%**
3	34	CITY	BED-I	Residential	76250	0	76250	88%	141.508	0	141.5077	63%	281.4142	119.638	0	119.6383	46%	21.76718	8%	57.669	58.675	101.74%	
				Agricultural	171	0	171	0%	4.991	0	4.991397	2%		5.631	0	5.631427	2%			1.158	1.317	113.72%	
				Commercial/Ind	9387	0	9387	11%	40.982	0	40.98165	18%		42.804	0	42.80414	16%			32.457	36.708	113.10%	
				Commercial/Ind	47	0	47	0%	23.908	0	23.90807	11%		66.418	0	66.41807	26%			45.955	46.853	101.95%	
				Others	716	0	716	1%	13.775	0	13.77513	6%		25.155	0	25.15508	10%			17.814	18.713	105.05%	
Sub-total					**86571**	**0**	**86571**	**100%**	**225.164**	**0**	**225.164**	**100%**	**281.4142**	**259.647**	**0**	**259.647**	**100%**	**21.76718**	**8%**	**155.0533**	**162.266**	**104.65%**	**3%**
4	34	CITY	BED-II	Residential	56765	0	56765	84%	128.535	0	128.5348	76%	183.1061	105.696	0	105.6964	71%	33.45784	18%	52.000	52.915	101.76%	
				Agricultural	0	0	0	0%	0	0	0	0%		0	0	0	0%			0	0	0.00%	
				Commercial/Ind	10117	0	10117	15%	36.703	0	36.7026	22%		35.254	0	35.25448	24%			26.314	28.496	108.29%	
				Commercial/Ind	21	0	21	0%	2.707	0	2.70694	2%		3.842	0	3.842025	3%			3.115	3.325	106.76%	
				Others	335	0	335	0%	2.193	0	2.192588	1%		4.855	0	4.855332	3%			3.354	3.587	106.94%	
Sub-total					**67238**	**0**	**67238**	**100%**	**170.137**	**0**	**170.137**	**100%**	**183.1061**	**149.6482**	**0**	**149.6482**	**100%**	**33.45784**	**18%**	**84.78197**	**88.323**	**104.18%**	**15%**
5	34	CITY	BED-III	Residential	71836	0	71836	92%	84.365	0	84.36507	66%	143.8358	67.680	0	67.68039	57%	25.66722	18%	30.478	30.537	100.19%	
				Agricultural	518	0	518	1%	6.633	0	6.633228	5%		7.381	0	7.380528	6%			1.606	1.836	114.32%	
				Commercial/Ind	5005	0	5005	6%	22.696	0	22.69562	18%		20.394	0	20.39429	17%			16.016	18.623	116.28%	
				Commercial/Ind	59	0	59	0%	10.503	0	10.50279	8%		14.377	0	14.37713	12%			12.651	14.372	113.61%	
				Others	1016	0	1016	1%	4.352	0	4.352422	3%		8.336	0	8.336218	7%			5.909	5.573	94.31%	
Sub-total					**78434**	**0**	**78434**	**100%**	**128.5491**	**0**	**128.5491**	**100%**	**143.8358**	**118.1686**	**0**	**118.1686**	**100%**	**25.66722**	**18%**	**66.6602**	**70.941**	**106.42%**	**13%**
6	29	HANJANAG	BNED	Residential	135633	0	135633	94%	132.291	0	132.2908	76%	171.3594	80.744	0	80.74352	71%	57.79443	34%	35.729	35.832	100.29%	
				Agricultural	1193	0	1193	1%	13.043	0	13.04337	8%		4.153	0	4.152774	4%			1.634	0.994	60.82%	
				Commercial/Ind	5377	0	5377	4%	21.705	0	21.70464	13%		17.785	0	17.78467	16%			13.772	15.633	113.51%	
				Commercial/Ind	8	0	8	0%	1.418	0	1.418067	1%		2.096	0	2.096369	2%			1.965	2.254	114.70%	
				Others	2003	0	2003	1%	4.993	0	4.992768	3%		8.788	0	8.787612	8%			5.837	6.428	110.13%	
Sub-total					**144214**	**0**	**144214**	**100%**	**173.4496**	**0**	**173.4496**	**100%**	**171.3594**	**113.5649**	**0**	**113.5649**	**100%**	**57.79443**	**34%**	**58.93739**	**61.141**	**103.74%**	**31%**
7	29	HANJANAG	BoED	Residential	98634	0	98634	93%	59.650	0	59.64972	55%	143.4722	48.252	0	48.25182	53%	51.97392	36%	22.326	15.901	71.22%	
				Agricultural	3191	0	3191	3%	24.671	0	24.67144	23%		13.468	0	13.46843	15%			2.738	1.306	47.71%	
				Commercial/Ind	3454	0	3454	3%	13.413	0	13.41253	12%		13.116	0	13.11618	14%			9.973	11.705	117.36%	
				Commercial/Ind	25	0	25	0%	5.438	0	5.43828	5%		13.010	0	13.01043	14%			9.541	10.873	113.96%	
				Others	1171	0	1171	1%	5.733	0	5.732869	5%		3.651	0	3.651435	4%			2.999	3.318	110.64%	
Sub-total					**106475**	**0**	**106475**	**100%**	**108.9048**	**0**	**108.9048**	**100%**	**143.4722**	**91.49829**	**0**	**91.49829**	**100%**	**51.97392**	**36%**	**47.57716**	**43.103**	**90.60%**	**42%**
8	21	ERHAMPU	GNED	Residential	106112	0	106112	93%	100.167	0	100.1668	44%	721.9941	75.129	0	75.12941	13%	122.9544	17%	33.387	30.263	90.64%	
				Agricultural	1885	0	1885	2%	11.581	0	11.58122	5%		10.229	0	10.22864	2%			2.149	2.044	95.11%	
				Commercial/Ind	4470	0	4470	4%	22.586	0	22.58555	10%		22.365	0	22.36478	4%			17.266	19.758	114.43%	
				Commercial/Ind	33	0	33	0%	87.321	0	87.32149	38%		478.535	0	478.5354	80%			287.062	311.943	108.67%	
				Others	1792	0	1792	2%	6.352	0	6.351743	3%		12.782	0	12.78151	2%			8.983	7.890	87.83%	
Sub-total					**114292**	**0**	**114292**	**100%**	**228.0068**	**0**	**228.0068**	**100%**	**721.9941**	**599.0397**	**0**	**599.0397**	**100%**	**122.9544**	**17%**	**348.8476**	**371.898**	**106.61%**	**12%**
9	31	RAYAGADA	GED	Residential	70305	0	70305	91%	53.314	0	53.31416	64%	86.91755	45.500	0	45.50001	61%	12.40937	14%	20.987	19.781	94.25%	
				Agricultural	1467	0	1467	2%	10.593	0	10.59262	13%		7.677	0	7.677041	10%			1.780	1.602	90.01%	
				Commercial/Ind	4249	0	4249	6%	14.308	0	14.30795	17%		11.664	0	11.6637	16%			9.475	10.117	106.78%	
				Commercial/Ind	6	0	6	0%	1.082	0	1.0819	1%		1.116	0	1.115897	1%			1.078	1.128	104.62%	

				Others	1150	0	1150	1%	4.431	0	4.430701	5%		8.552	0	8.551528	11%			5.794	6.442	111.19%	
Sub-total					**77177**	**0**	**77177**	**100%**	**83.72733**	**0**	**83.72733**	**100%**	**86.91755**	**74.50818**	**0**	**74.50818**	**100%**	**12.40937**	**14%**	**39.11298**	**39.07**	**99.89%**	**14%**
				Residential	104203	0	104203	94%	113.777	0	113.7773	78%		68.079	0	68.07879	66%			29.164	28.743	98.56%	
				Agricultural	1357	0	1357	1%	6.649	0	6.649275	5%		5.426	0	5.426007	5%			1.232	0.777	63.05%	
10	35	ASKA	GSED	Commercial/Ind	4026	0	4026	4%	16.315	0	16.31484	11%	140.4877	14.576	0	14.57587	14%	36.69451	26%	11.116	12.364	111.23%	
				Commercial/Ind	11	0	11	0%	4.597	0	4.5967	3%		9.884	0	9.884358	10%			6.481	7.090	109.39%	
				Others	1654	0	1654	1%	3.997	0	3.997224	3%		5.828	0	5.828184	6%			3.964	4.968	125.33%	
Sub-total					**111251**	**0**	**111251**	**100%**	**145.3354**	**0**	**145.3354**	**100%**	**140.4877**	**103.7932**	**0**	**103.7932**	**100%**	**36.69451**	**26%**	**51.95716**	**53.942**	**103.82%**	**23%**
				Residential	86326	0	86326	94%	88.696	0	88.69573	75%		54.039	0	54.03904	65%			23.435	23.513	100.33%	
				Agricultural	1023	0	1023	1%	3.691	0	3.691189	3%		3.021	0	3.020844	4%			0.567	0.494	87.11%	
11	21	ERHAMPU	HED	Commercial/Ind	3363	0	3363	4%	17.529	0	17.52894	15%	137.2243	14.495	0	14.49535	17%	54.27284	40%	11.369	12.400	109.07%	
				Commercial/Ind	15	0	15	0%	4.106	0	4.1058	3%		4.889	0	4.888666	6%			4.119	4.462	108.32%	
				Others	1230	0	1230	1%	4.545	0	4.544581	4%		6.508	0	6.50754	8%			4.583	5.208	113.65%	
Sub-total					**91957**	**0**	**91957**	**100%**	**118.5662**	**0**	**118.5662**	**100%**	**137.2243**	**82.95144**	**0**	**82.95144**	**100%**	**54.27284**	**40%**	**44.07255**	**46.077**	**104.55%**	**37%**
				Residential	148107	0	148107	91%	117.631	0	117.6314	55%		88.331	0	88.33052	39%			41.225	33.418	81.06%	
				Agricultural	4069	0	4069	3%	18.549	0	18.54864	9%		16.374	0	16.37447	7%			3.113	1.860	59.75%	
12	71	JEYPORE	JED	Commercial/Ind	7922	0	7922	5%	37.770	0	37.76961	18%	280.5287	33.134	0	33.13442	15%	55.98004	20%	25.537	27.687	108.42%	
				Commercial/Ind	58	0	58	0%	33.593	0	33.59334	16%		73.260	0	73.26033	33%			57.685	60.348	104.62%	
				Others	1822	0	1822	1%	6.562	0	6.561584	3%		13.449	0	13.44893	6%			9.449	10.719	113.44%	
Sub-total					**161978**	**0**	**161978**	**100%**	**214.1046**	**0**	**214.1046**	**100%**	**280.5287**	**224.5487**	**0**	**224.5487**	**100%**	**55.98004**	**20%**	**137.0094**	**134.032**	**97.83%**	**22%**
				Residential	142026	0	142026	94%	108.198	0	108.1982	54%		81.405	0	81.40499	34%			38.280	23.905	62.45%	
				Agricultural	1979	0	1979	1%	9.923	0	9.922883	5%		6.794	0	6.793751	3%			1.243	0.603	48.52%	
13	71	JEYPORE	KED	Commercial/Ind	5568	0	5568	4%	19.243	0	19.24253	10%	311.877	19.180	0	19.17968	8%	73.28571	23%	14.522	16.222	111.70%	
				Commercial/Ind	50	0	50	0%	55.397	0	55.39728	27%		113.059	0	113.0593	47%			84.244	86.549	102.74%	
				Others	1162	0	1162	1%	9.259	0	9.258981	5%		18.154	0	18.15364	8%			12.488	13.351	106.91%	
Sub-total					**150785**	**0**	**150785**	**100%**	**202.0198**	**0**	**202.0198**	**100%**	**311.877**	**238.5913**	**0**	**238.5913**	**100%**	**73.28571**	**23%**	**150.7773**	**140.63**	**93.27%**	**29%**
				Residential	129567	0	129567	93%	71.035	0	71.03471	59%		81.003	0	81.00309	57%			37.343	20.929	56.04%	
				Agricultural	3009	0	3009	2%	19.480	0	19.48007	16%		5.165	0	5.165467	4%			1.157	0.442	38.21%	
14	71	JEYPORE	MED	Commercial/Ind	4350	0	4350	3%	16.016	0	16.01584	13%	189.1174	18.200	0	18.19976	13%	48.09758	25%	13.681	15.128	110.58%	
				Commercial/Ind	17	0	17	0%	7.760	0	7.76029	6%		26.777	0	26.77683	19%			17.623	19.482	110.55%	
				Others	1804	0	1804	1%	6.390	0	6.389918	5%		9.875	0	9.874706	7%			6.817	8.019	117.64%	
Sub-total					**138747**	**0**	**138747**	**100%**	**120.6808**	**0**	**120.6808**	**100%**	**189.1174**	**141.0198**	**0**	**141.0198**	**100%**	**48.09758**	**25%**	**76.62125**	**64**	**83.53%**	**38%**
				Residential	260361	0	260361	94%	188.611	0	188.6107	73%		148.213	0	148.2128	64%			69.576	32.044	46.06%	
				Agricultural	7730	0	7730	3%	26.169	0	26.16853	10%		28.502	0	28.502	12%			5.247	2.430	46.31%	
15	71	JEYPORE	NED	Commercial/Ind	6468	0	6468	2%	27.117	0	27.11738	10%	342.4152	25.829	0	25.82907	11%	112.0439	33%	20.019	22.605	112.92%	
				Commercial/Ind	26	0	26	0%	8.312	0	8.311867	3%		15.182	0	15.18188	7%			11.411	12.748	111.72%	
				Others	2454	0	2454	1%	8.886	0	8.885528	3%		12.646	0	12.64554	5%			10.430	11.555	110.78%	
Sub-total					**277039**	**0**	**277039**	**100%**	**259.094**	**0**	**259.094**	**100%**	**342.4152**	**230.3713**	**0**	**230.3713**	**100%**	**112.0439**	**33%**	**116.6819**	**81.382**	**69.75%**	**53%**
				Residential	165594	0	165594	94%	103.536	0	103.5361	72%		68.886	0	68.88577	65%			32.485	27.323	84.11%	
				Agricultural	1391	0	1391	1%	8.135	0	8.134644	6%		3.739	0	3.739176	4%			0.713	0.224	31.41%	
16	29	HANJANAG	PED	Commercial/Ind	6995	0	6995	4%	18.807	0	18.80662	13%	151.5872	18.064	0	18.06443	17%	45.26117	30%	13.252	14.502	109.43%	
				Commercial/Ind	8	0	8	0%	1.376	0	1.37585	1%		1.267	0	1.267365	1%			1.134	1.349	118.92%	
				Others	2510	0	2510	1%	11.094	0	11.0939	8%		14.369	0	14.36928	14%			9.901	12.619	127.45%	
Sub-total					**176498**	**0**	**176498**	**100%**	**142.9471**	**0**	**142.9471**	**100%**	**151.5872**	**106.326**	**0**	**106.326**	**100%**	**45.26117**	**30%**	**57.48502**	**56.017**	**97.45%**	**32%**
				Residential	132678	0	132678	92%	105.628	0	105.6279	70%		76.738	0	76.73775	64%			35.583	32.234	90.59%	
				Agricultural	1141	0	1141	1%	10.091	0	10.09127	7%		5.001	0	5.001408	4%			1.188	0.743	62.54%	
17	31	RAYAGADA	PKED	Commercial/Ind	7958	0	7958	6%	23.900	0	23.89987	16%	147.5958	20.669	0	20.66944	17%	26.9162	18%	15.735	16.980	107.91%	
				Commercial/Ind	22	0	22	0%	4.548	0	4.5482	3%		4.639	0	4.638599	4%			4.135	4.226	102.20%	
				Others	2377	0	2377	2%	7.172	0	7.172483	5%		13.632	0	13.63244	11%			9.158	8.514	92.97%	
Sub-total					**144176**	**0**	**144176**	**100%**	**151.3397**	**0**	**151.3397**	**100%**	**147.5958**	**120.6796**	**0**	**120.6796**	**100%**	**26.9162**	**18%**	**65.79902**	**62.697**	**95.29%**	**22%**
				Residential	110957	0	110957	94%	112.017	0	112.0166	78%		64.076	0	64.07608	67%			28.079	27.026	96.25%	
				Agricultural	1197	0	1197	1%	8.224	0	8.22357	6%		5.776	0	5.775638	6%			1.308	1.037	79.28%	
18	21	ERHAMPU	PSED	Commercial/Ind	4148	0	4148	4%	17.395	0	17.39526	12%	170.2508	16.047	0	16.04695	17%	75.06024	44%	12.515	13.245	105.84%	
				Commercial/Ind	7	0	7	0%	1.223	0	1.2229	1%		1.061	0	1.061066	1%			0.999	1.089	109.01%	
				Others	1654	0	1654	1%	4.155	0	4.154871	3%		8.231	0	8.230789	9%			5.562	5.773	103.80%	
Sub-total					**117963**	**0**	**117963**	**100%**	**143.0132**	**0**	**143.0132**	**100%**	**170.2508**	**95.19053**	**0**	**95.19053**	**100%**	**75.06024**	**44%**	**48.46224**	**48.17**	**99.40%**	**44%**
				Residential	153171	0	153171	92%	123.381	0	123.3809	46%		92.944	0	92.94352	33%			43.765	40.482	92.50%	
				Agricultural	1338	0	1338	1%	7.259	0	7.258685	3%		5.214	0	5.213919	2%			0.946	0.927	97.98%	
19	31	RAYAGADA	RED	Commercial/Ind	9334	0	9334	6%	34.420	0	34.41954	13%	326.522	28.843	0	28.84252	10%	40.88566	13%	22.511	25.138	111.67%	
				Commercial/Ind	50	0	50	0%	65.759	0	65.75923	24%		137.376	0	137.3762	48%			102.233	103.170	100.92%	
				Others	1886	0	1886	1%	38.205	0	38.20455	14%		21.260	0	21.26019	7%			15.701	16.153	102.88%	

Sub-total				**165779**	**0**	**165779**	**100%**	**269.0229**	**0**	**269.0229**	**100%**	**326.522**	**285.6364**	**0**	**285.6364**	**100%**	**40.88566**	**13%**	**185.1553**	**185.87**	**100.39%**	**12%**
76	Total		Residential	2172186	0	2172186	93%	1971.235	0	1971.235	64%	4203.943	1445.398	0	1445.398	46%	1049.486	25%	665.7253	563.927	84.71%	
			Agricultural	33846	0	33846	1%	197.2554	0	197.2554	6%		139.2984	0	139.2984	4%			28.97631	19.68	67.92%	
			Commercial/Ind	106841	0	106841	5%	423.8764	0	423.8764	14%		391.8292	0	391.8292	12%			300.6144	333.928	111.08%	
			Commercial/Ind	474	0	474	0%	321.6901	0	321.6901	11%		969.2664	0	969.2664	31%			653.9852	694.022	106.12%	
			Others	28146	0	28146	1%	147.2473	0	147.2473	5%		208.6657	0	208.6657	7%			146.8831	157.823	107.45%	
77	**At company level**			**2341493**	**0**	**2341493**	**100%**	**3061.304**	**0**	**3061.304**	**100%**	**4203.943**	**3154.458**	**0**	**3154.458**	**100%**	**1049.486**	**25%**	**1796.184**	**1769.38**	**98.51%**	**26%**

**** Note - It shall be mandatory to record the energy supplied separately for each category of consumers which is being provided a separate rate of subsidy in the tariff, by the state government, so that the subsidy due for the electricity distribution**

Color code	Parameter
	Please enter name of circle
	Please enter circle code
0	Please enter numeric value or 0
	Formula protected

I/We undertake that the information supplied in this Document and Pro-forma is accurate to the best of my knowledge and if any of the information supplied is found to be incorrect and such information result into loss to the Central Government or State Government or any of the authority under them or any other person affected, I/we undertake to indemnify such loss.

Authorised Signatory and Seal

Vijay Parkash Sharma
Chief Commercial Services
TPSODL,Berhampur,Gm

Name of Authorised Signatory:

Name of the DISCOM:

Full Address:-

Seal

Signature:-

Name of Energy Manager:

Registration Number:

RATAN KUMAR
EA-32475/24

Form-Input energy(Details of Input energy & Infrastructure)			
A. Summary of energy input & Infrastructure			
S.No	Parameters	Period For Apr'22 To Mar'23	Remarks (Source of data)
A.1	Input Energy purchased (MU)	4203.947155	
A.2	Transmission loss (%)	0%	NA
A.3	Transmission loss (MU)	0	
A.4	Energy sold outside the periphery(MU)	0	
A.5	Open access sale (MU)	0	
A.6	EHT sale	705.6845867	
A.7	Net input energy (received at DISCOM periphery or at distribution point)-(MU)	4203.95	
A.8	Is 100% metering available at 66/33 kV (Select yes or no from list)	No	
A.9	Is 100% metering available at 11 kV (Select yes or no from list)	No	
A.10	% of metering available at DT	0%	
A.11	% of metering available at consumer end	100%	
A.12	No of feeders at 66kV voltage level	0	
A.13	No of feeders at 33kV voltage level	130	
A.14	No of feeders at 11kV voltage level	906	
A.15	No of LT feeders level	58179	
A.16	Line length (ckt. km) at 66kV voltage level	0	
A.17	Line length (ckt. km) at 33kV voltage level	4046.37	
A.18	Line length (ckt. km) at 11kV voltage level	45309.32	
A.19	Line length (km) at LT level	40216.98	
A.20	Length of Aerial Bunched Cables	31098.41	
A.21	Length of Underground Cables	105.85	
A.22	HT/LT ratio	1.227235113	

B. Meter reading of Input energy at injection points																						
S.No	Zone	Circle	Voltge Level (KVA)	Division (KVA)	Sub-Division (KVA)	Feeder ID	Feeder Name	Feeder Metering Status (Metered/ unmetered / AMI/AMR)	Status of Meter (Functional/Non-functional)	Metering Date Date of last actual meter reading / communication	Feeder Type (Agri/ Industrial/ Mixed)	Status of Communication % data received through automatically if feeder AMR/AMI	Number of hours when meter was unable to communicate in	Total Number of hours in the period	Period from...to... Meter S.No	CT/PT ratio	Import (MU)	Export (MU)	Sales	Remarks (Source of data)	
B.1	TPSODL	RAYAGADA	132/33kV	GED	GUNUPUR	Akhusingi	Trf1-12.5MV	Metered	Functional	31.03.2023	MIXED	NA	NA	NA	OPT02182	1	42.6795		42.68	BST BILL	
B.2	TPSODL	RAYAGADA	132/33kV	GED	GUNUPUR	Akhusingi	Trf2-12.5MV	Metered	Functional	31.03.2023	MIXED	NA	NA	NA	OPT02184	1	41.7707		41.77	BST BILL	
B.3	TPSODL	ASKA	132/33kV	AED-I	ASKA	Aska	Trf1-40MVA	Metered	Functional	31.03.2023	MIXED	NA	NA	NA	OPT01167	1	90.2530		90.25	BST BILL	
B.4	TPSODL	ASKA	132/33kV	AED-I	ASKA	Aska	Trf2-40MVA	Metered	Functional	31.03.2023	MIXED	NA	NA	NA	OPT00961	1	88.4681		88.47	BST BILL	
B.5	TPSODL	ASKA	132/33kV	AED-I	ASKA	Aska	Trf3-40MVA	Metered	Functional	31.03.2023	MIXED	NA	NA	NA	OPT01457	1	88.2467		88.25	BST BILL	
B.6	TPSODL	ASKA	132/33kV	AED II	K S NAGAR	Aska New(22	Trf1-40MVA	Metered	Functional	31.03.2023	MIXED	NA	NA	NA	OPT01811	1	78.4018		78.40	BST BILL	
B.7	TPSODL	ASKA	132/33kV	AED II	K S NAGAR	Aska New	Trf2-20MVA	Metered	Functional	31.03.2023	MIXED	NA	NA	NA	OPT02377	1	6.5492		6.55	BST BILL	
B.8	TPSODL	JEYPORE	220/33kV	MED	BALIMELA	Balimela	Trf1-40MVA	Metered	Functional	31.03.2023	MIXED	NA	NA	NA	OPT01893	1	53.9681		53.97	BST BILL	
B.9	TPSODL	JEYPORE	220/33kV	MED	BALIMELA	Balimela	Trf2-20MVA	Metered	Functional	31.03.2023	MIXED	NA	NA	NA	OPT01895	1	35.4177		35.42	BST BILL	
B.10	TPSODL	BERHAMPUR	Khallikote Fe	GNED	KHALLIKOTE	Balugaon	Khallikote Fe	Metered	Functional	31.03.2023	MIXED	NA	NA	NA	OPT00747	1	97.8282		97.83	BST BILL	
B.11	TPSODL	CITY	132/33kV	BED-II	SUB.DIVISION	Berhampur	Trf1-40MVA	Metered	Functional	31.03.2023	MIXED	NA	NA	NA	OPT00121	1	128.4307		128.43	BST BILL	
B.12	TPSODL	CITY	132/33kV	BED-II	SUB.DIVISION	Berhampur	Trf2-20MVA	Metered	Functional	31.03.2023	MIXED	NA	NA	NA	B0004476	1	82.2894		82.29	BST BILL	
B.13	TPSODL	CITY	132/33kV	BED-II	SUB.DIVISION	Berhampur	Trf3-40MVA	Metered	Functional	31.03.2023	MIXED	NA	NA	NA	OPT00123	1	130.7859		130.79	BST BILL	
B.14	TPSODL	BHANJANAG	132/33kV	BNED	BHANJANAG	Bhanjanagar	Trf1-40MVA	Metered	Functional	31.03.2023	MIXED	NA	NA	NA	OPT02084	1	64.3287		64.33	BST BILL	
B.15	TPSODL	BHANJANAG	132/33kV	BNED	BHANJANAG	Bhanjanagar	Trf2-16MVA	Metered	Functional	31.03.2023	MIXED	NA	NA	NA	OPT01273	1	41.9081		41.91	BST BILL	
B.16	TPSODL	BHANJANAG	132/33kV	BNED	BHANJANAG	Bhanjanagar	Trf3-40MVA	Metered	Functional	31.03.2023	MIXED	NA	NA	NA	OPT01277	1	65.2765		65.28	BST BILL	
B.17	TPSODL	BHANJANAG	Aditya Birla S	BOED	BOUDH	Boudh	Aditya Birla S	Metered	Functional	31.03.2023	MIXED	NA	NA	NA	ORU51513	1	25.9074	0.08	25.82	BST BILL	
B.18	TPSODL	BHANJANAG	Aditya Birla S	BOED	BOUDH	Boudh	Aditya Birla S	Metered	Functional	31.03.2023	MIXED	NA	NA	NA	ORU51512	1	25.7991	0.07	25.73	BST BILL	
B.19	TPSODL	BHANJANAG	Solar extra In	BOED	BOUDH	Boudh	Solar extra In	Metered	Functional	31.03.2023	MIXED	NA	NA	NA	TPSODL-02	1	-25.1235		-25.12	BST BILL	
B.20	TPSODL	BHANJANAG	132/33kV	BOED	BOUDH	Boudh	Trf1-20MVA	Metered	Functional	31.03.2023	MIXED	NA	NA	NA	OPT01155	1	22.2420		22.24	BST BILL	
B.21	TPSODL	BHANJANAG	132/33kV	BOED	BOUDH	Boudh	Trf2-20MVA	Metered	Functional	31.03.2023	MIXED	NA	NA	NA	OPT00858	1	22.2799		22.28	BST BILL	
B.22	TPSODL	BERHAMPUR	IRE Feeder1	GNED	CHATRAPUR	Chatrapur	IRE Feeder1	Metered	Functional	31.03.2023	MIXED	NA	NA	NA	APM03533	1	23.8592		23.86	BST BILL	
B.23	TPSODL	BERHAMPUR	IRE Feeder2	GNED	CHATRAPUR	Chatrapur	IRE Feeder2	Metered	Functional	31.03.2023	MIXED	NA	NA	NA	APM03517	1	41.1572		41.16	BST BILL	
B.24	TPSODL	BERHAMPUR	Rambha Tr. F	GNED	CHATRAPUR	Chatrapur	Rambha Trac	Metered	Functional	31.03.2023	MIXED	NA	NA	NA	OPT00688	1	41.8582		41.86	BST BILL	
B.25	TPSODL	BERHAMPUR	132/33kV	GNED	CHATRAPUR	Chatrapur	Trf1-20MVA	Metered	Functional	31.03.2023	MIXED	NA	NA	NA	OPT00786	1	74.6437		74.64	BST BILL	
B.26	TPSODL	BERHAMPUR	132/33kV	GNED	CHATRAPUR	Chatrapur	Trf2-20MVA	Metered	Functional	31.03.2023	MIXED	NA	NA	NA	OPT00715	1	60.0788		60.08	BST BILL	
B.27	TPSODL	BERHAMPUR	132/33kV	GNED	CHATRAPUR	Chatrapur	Trf3-20MVA	Metered	Functional	31.03.2023	MIXED	NA	NA	NA	OPT00107	1	53.5845		53.58	BST BILL	
B.28	TPSODL	ASKA	132/33kV	GSED	CHIKITI	Chikiti	Trf1-40MVA	Metered	Functional	31.03.2023	MIXED	NA	NA	NA	OPT01593	1	56.0940		56.09	BST BILL	
B.29	TPSODL	JEYPORE	132/33kV	NED	PAPADHAND	Dabugaon	Trf1-12.5MV	Metered	Functional	31.03.2023	MIXED	NA	NA	NA	OPT00717	1	34.7698		34.77	BST BILL	
B.30	TPSODL	JEYPORE	132/33kV	NED	PAPADHAND	Dabugaon	Trf2-12.5MV	Metered	Functional	31.03.2023	MIXED	NA	NA	NA	OPT00861	1	34.7547		34.75	BST BILL	
B.31	TPSODL	ASKA	132/33kV	GSED	DIGAPAHANI	Digapahandi	Trf1-20MVA	Metered	Functional	31.03.2023	MIXED	NA	NA	NA	APM03696	1	58.6633		58.66	BST BILL	
B.32	TPSODL	ASKA	132/33kV	GSED	DIGAPAHANI	Digapahandi	Trf2-20MVA	Metered	Functional	31.03.2023	MIXED	NA	NA	NA	APM03549	1	59.9788		59.98	BST BILL	
B.33	TPSODL	ASKA	132/33kV	GSED	DIGAPAHANI	Digapahandi	Trf3-12.5MV	Metered	Functional	31.03.2023	MIXED	NA	NA	NA	APM12597	1	38.2688		38.27	BST BILL	
B.34	TPSODL	BHANJANAG	132/33kV	PED	G.UDYAGIRI	G.Udayagiri	Trf1-20MVA	Metered	Functional	31.03.2023	MIXED	NA	NA	NA	OPT02312	1	13.7019		13.70	BST BILL	
B.35	TPSODL	BHANJANAG	132/33kV	PED	G.UDYAGIRI	G.Udayagiri	Trf2-20MVA	Metered	Functional	31.03.2023	MIXED	NA	NA	NA	OPT01437	1	18.6734		18.67	BST BILL	
B.36	TPSODL	BERHAMPUR	GRASIM Ind.	GNED	RAMBHA	Ganjam	GRASIM Ind.	Metered	Functional	31.03.2023	MIXED	NA	NA	NA	OPT00003	1	144.9578	10.76	134.20	BST BILL	
B.37	TPSODL	BERHAMPUR	132/33kV	GNED	RAMBHA	Ganjam	Trf1-12.5MV	Metered	Functional	31.03.2023	MIXED	NA	NA	NA	OPT00347	1	29.7884		29.79	BST BILL	
B.38	TPSODL	BERHAMPUR	132/33kV	GNED	RAMBHA	Ganjam	Trf2-12.5MV	Metered	Functional	31.03.2023	MIXED	NA	NA	NA	OPT00697	1	31.4399		31.44	BST BILL	
B.39	TPSODL	BHANJANAG	GEDCOL Sola	BOED	SONEPUR	Guhipita	GEDCOL Sola	Metered	Functional	31.03.2023	MIXED	NA	NA	NA	ORA00072	1	2.8619	0.03	2.84	BST BILL	
B.40	TPSODL	RAYAGADA	132/33KV	GED	GUNUPUR	Gunupur	Trf1-20MVA	Metered	Functional	31.03.2023	MIXED	NA	NA	NA	OPT01600	1	1.2858		1.29	BST BILL	
B.41	TPSODL	RAYAGADA	132/33KV	GED	GUNUPUR	Gunupur	Trf2-20MVA	Metered	Functional	31.03.2023	MIXED	NA	NA	NA	OPT01801	1	1.3170		1.32	BST BILL	
B.42	TPSODL	JEYPORE	TPSODL Feed	MED	BALIMELA	Govindapalli	TPSODL Feed	Metered	Functional	31.03.2023	MIXED	NA	NA	NA	TPSODL-01	1	6.8051		6.81	BST BILL	

B.43	TPSODL	BERHAMPUR	132/33kV	HED	HINJILICUT	Hinjili GIS	Trf1-20MVA	Metered	Functional	31.03.2023	MIXED	NA	NA	NA	OPT02306	1	20.0241		20.02	BST BILL	
B.44	TPSODL	BERHAMPUR	132/33kV	HED	HINJILICUT	Hinjili GIS	Trf2-20MVA	Metered	Functional	31.03.2023	MIXED	NA	NA	NA	OPT02379	1	6.7112		6.71	BST BILL	
B.45	TPSODL	JEYPORE	JAYPUR PG 2	JED	JEYPORE SDC	Jayanagar	JAYPUR PG 2	Metered	Functional	31.03.2023	MIXED	NA	NA	NA	ER1599-A	1	0.3282		0.33	BST BILL	
B.46	TPSODL	JEYPORE	JAYPUR PG 3	JED	JEYPORE SDC	Jayanagar	JAYPUR PG 3	Metered	Functional	31.03.2023	MIXED	NA	NA	NA	ER1600-A	1	0.3423		0.34	BST BILL	
B.47	TPSODL	JEYPORE	JAYPUR PG 4	JED	JEYPORE SDC	Jayanagar	JAYPUR PG 4	Metered	Functional	31.03.2023	MIXED	NA	NA	NA	NP5965-A	1	0.7018		0.70	BST BILL	
B.48	TPSODL	JEYPORE	Traction Feed	JED	JEYPORE SDC	Jayanagar	Traction Feed	Metered	Functional	31.03.2023	MIXED	NA	NA	NA	OPT00932	1	82.5684		82.57	BST BILL	
B.49	TPSODL	JEYPORE	132/33kV	JED	JEYPORE SDC	Jayanagar	Trf1-12.5MV	Metered	Functional	31.03.2023	MIXED	NA	NA	NA	OPT00917	1	26.4051		26.41	BST BILL	
B.50	TPSODL	JEYPORE	132/33kV	JED	JEYPORE SDC	Jayanagar	Trf2-20MVA	Metered	Functional	31.03.2023	MIXED	NA	NA	NA	OPT01052	1	64.3516		64.35	BST BILL	
B.51	TPSODL	JEYPORE	132/33kV	JED	JEYPORE SDC	Jayanagar	Trf3-20MVA	Metered	Functional	31.03.2023	MIXED	NA	NA	NA	APM12635	1	65.0159		65.02	BST BILL	
B.52	TPSODL	JEYPORE	132/33kV	JED	JEYPORE SDC	Jayanagar	Trf4-20MVA	Metered	Functional	31.03.2023	MIXED	NA	NA	NA	OPT02172	1	65.4656		65.47	BST BILL	
B.53	TPSODL	JEYPORE	220/33kV	MED	MALKANGIRI	Kalimela	Trf1-20MVA	Metered	Functional	31.03.2023	MIXED	NA	NA	NA	OPT02260	1	4.1053		4.11	BST BILL	
B.54	TPSODL	JEYPORE	220/33kV	MED	MALKANGIRI	Kalimela	Trf2-20MVA	Metered	Functional	31.03.2023	MIXED	NA	NA	NA	OPT02262	1	3.8179		3.82	BST BILL	
B.55	TPSODL	RAYAGADA	220/33kV	RED	KASIPUR	Kasipur	220/33KV 20	Metered	Functional	31.03.2023	MIXED	NA	NA	NA	OPT01473	1	7.5172		7.52	BST BILL	
B.56	TPSODL	JEYPORE	Laxmipur RTS	KED	LAXMIPUR	Laxmipur	Laxmipur RTS	Metered	Functional	31.03.2023	MIXED	NA	NA	NA	OPT02254	1	11.8398		11.84	BST BILL	
B.57	TPSODL	JEYPORE	220/33kV	KED	LAXMIPUR	Laxmipur	Trf1-20MVA	Metered	Functional	31.03.2023	MIXED	NA	NA	NA	OPT00741	1	27.2313		27.23	BST BILL	
B.58	TPSODL	JEYPORE	220/33kV	KED	LAXMIPUR	Laxmipur	Trf2-20MVA	Metered	Functional	31.03.2023	MIXED	NA	NA	NA	OPT01479	1	25.7748		25.77	BST BILL	
B.59	TPSODL	RAYAGADA	UTKAL ALUM	RED	THERUBALLI	Laxmipur	UTKAL ALUM	Metered	Functional	31.03.2023	MIXED	NA	NA	NA	OPT00780	1	2.2337		2.23	BST BILL	
B.60	TPSODL	RAYAGADA	UTKAL ALUM	RED	THERUBALLI	Laxmipur	UTKAL ALUM	Metered	Functional	31.03.2023	MIXED	NA	NA	NA	OPT00875	1	5.9169		5.92	BST BILL	
B.61	TPSODL	JEYPORE	220/33kV	MED	MALKANGIRI	Malkangiri	Trf1-40MVA	Metered	Functional	31.03.2023	MIXED	NA	NA	NA	OPT01779	1	42.2668		42.27	BST BILL	
B.62	TPSODL	JEYPORE	220/33kV	MED	MALKANGIRI	Malkangiri	Trf2-40MVA	Metered	Functional	31.03.2023	MIXED	NA	NA	NA	OPT00710	1	42.7629		42.76	BST BILL	
B.63	TPSODL	JEYPORE	Megalift Feed	MED	BALIMELA	Meenakshi s	Megalift Feed	Metered	Functional	31.03.2023	MIXED	NA	NA	NA	OPT01557	1	0.1959		0.20	BST BILL	
B.64	TPSODL	RAYAGADA	132/33kV	PKED	MOHANA	Mohana	Trf1-12.5MV	Metered	Functional	31.03.2023	MIXED	NA	NA	NA	OPT01794	1	22.3754		22.38	BST BILL	
B.65	TPSODL	RAYAGADA	132/33kV	PKED	MOHANA	Mohana	Trf2-12.5MV	Metered	Functional	31.03.2023	MIXED	NA	NA	NA	OPT01886	1	21.0544		21.05	BST BILL	
B.66	TPSODL	RAYAGADA	Bissam-Cutta	RED	BISSAM CUT	Muniguda	Bissam-Cutta	Metered	Functional	31.03.2023	MIXED	NA	NA	NA	OPT01798	1	52.5739		52.57	BST BILL	
B.67	TPSODL	RAYAGADA	132/33kV	RED	BISSAM CUT	Muniguda	Trf1- 12.5MV	Metered	Functional	31.03.2023	MIXED	NA	NA	NA	OPT02161	1	39.2689		39.27	BST BILL	
B.68	TPSODL	JEYPORE	132/33kV	NED	Nabarangpur	Nabarangpur	Trf1-20MVA	Metered	Functional	31.03.2023	MIXED	NA	NA	NA	OPT02258	1	28.5174		28.52	BST BILL	
B.69	TPSODL	CITY	220 KV TATA	BED-I	SUB.DIV.NO-	Narendrapur	220 KV TATA	Metered	Functional	31.03.2023	MIXED	NA	NA	NA	OREB9352	1	0.0000		0.00	BST BILL	
B.70	TPSODL	CITY	220 KV TATA	BED-I	SUB.DIV.NO-	Narendrapur	220 KV TATA	Metered	Functional	31.03.2023	MIXED	NA	NA	NA	OREB9350	1	195.3149	43.80	151.51	BST BILL	
B.71	TPSODL	CITY	Narendrapur	BED-I	SUB.DIV.NO-	Narendrapur	Narendrapur	Metered	Functional	31.03.2023	MIXED	NA	NA	NA	OPT00859	1	44.5579		44.56	BST BILL	
B.72	TPSODL	CITY	132/33kV	BED-I	SUB.DIV.NO-	Narendrapur	Trf1-20MVA	Metered	Functional	31.03.2023	MIXED	NA	NA	NA	OPT01837	1	37.6294		37.63	BST BILL	
B.73	TPSODL	CITY	132/33kV	BED-I	SUB.DIV.NO-	Narendrapur	Trf2-40MVA	Metered	Functional	31.03.2023	MIXED	NA	NA	NA	OPT00676	1	60.3458		60.35	BST BILL	
B.74	TPSODL	CITY	132/33kV	BED-I	SUB.DIV.NO-	Narendrapur	Trf3-40MVA	Metered	Functional	31.03.2023	MIXED	NA	NA	NA	OPT00856	1	77.2839		77.28	BST BILL	
B.75	TPSODL	CITY	132/33kV	BED-I	SUB.DIV.NO-	Narendrapur	Trf4-40MVA	Metered	Functional	31.03.2023	MIXED	NA	NA	NA	OPT01810	1	62.0522		62.05	BST BILL	
B.76	TPSODL	RAYAGADA	132/33kV	PKED	PARLAKHEM	Paralakheme	Trf1-12.5MV	Metered	Functional	31.03.2023	MIXED	NA	NA	NA	OPT01956	1	34.3628		34.36	BST BILL	
B.77	TPSODL	RAYAGADA	132/33kV	PKED	PARLAKHEM	Paralakheme	Trf2-12.5MV	Metered	Functional	31.03.2023	MIXED	NA	NA	NA	OPT01958	1	34.5995		34.60	BST BILL	
B.78	TPSODL	RAYAGADA	132/33kV	PKED	PARLAKHEM	Paralakheme	Trf3-12.5MV	Metered	Functional	31.03.2023	MIXED	NA	NA	NA	OPT00537	1	36.4887		36.49	BST BILL	
B.79	TPSODL	BHANJANAG	132/33kV	PED	PHULBANI	Phulbani	Trf1-40MVA	Metered	Functional	31.03.2023	MIXED	NA	NA	NA	OPT01879	1	52.7069		52.71	BST BILL	
B.80	TPSODL	BHANJANAG	132/33kV	PED	PHULBANI	Phulbani	Trf2-12.5MV	Metered	Functional	31.03.2023	MIXED	NA	NA	NA	OPT01880	1	13.8195		13.82	BST BILL	
B.81	TPSODL	BHANJANAG	132/33kV	PED	PHULBANI	Phulbani	Trf3-40MVA	Metered	Functional	31.03.2023	MIXED	NA	NA	NA	OPT01883	1	49.2968		49.30	BST BILL	
B.82	TPSODL	JEYPORE	132/33kV	KED	LAXMIPUR	Podagada	Trf1-20MVA	Metered	Functional	31.03.2023	MIXED	NA	NA	NA	OPT02348	1	14.2480		14.25	BST BILL	
B.83	TPSODL	JEYPORE	132/33kV	KED	LAXMIPUR	Podagada	Trf2-12.5MV	Metered	Functional	31.03.2023	MIXED	NA	NA	NA	OPT01802	1	13.1195		13.12	BST BILL	
B.84	TPSODL	JEYPORE	132/33kV	KED	SUNABEDA	Potangi	Trf1-40MVA	Metered	Functional	31.03.2023	MIXED	NA	NA	NA	OPT00247	1	19.4935		19.49	BST BILL	
B.85	TPSODL	BERHAMPUR	132/33kV	PSED	CHATARPUR	Purushottam	Trf1-12.5MV	Metered	Functional	31.03.2023	MIXED	NA	NA	NA	OPT00151	1	27.7710		27.77	BST BILL	
B.86	TPSODL	BERHAMPUR	132/33kV	PSED	CHATARPUR	Purushottam	Trf2-12.5MV	Metered	Functional	31.03.2023	MIXED	NA	NA	NA	OPT00156	1	28.5754		28.58	BST BILL	
B.87	TPSODL	BERHAMPUR	132/33kV	PSED	CHATARPUR	Purushottam	Trf3-20MVA	Metered	Functional	31.03.2023	MIXED	NA	NA	NA	OPT01795	1	44.7280		44.73	BST BILL	
B.88	TPSODL	RAYAGADA	Traction Feed	RED	RAYAGADA	Rayagada	Traction Feed	Metered	Functional	31.03.2023	MIXED	NA	NA	NA	OPT00740	1	43.0555		43.06	BST BILL	
B.89	TPSODL	RAYAGADA	132/33kV	RED	RAYAGADA	Rayagada	Trf1-12.5MV	Metered	Functional	31.03.2023	MIXED	NA	NA	NA	OPT01846	1	23.8728		23.87	BST BILL	
B.90	TPSODL	RAYAGADA	132/33kV	RED	RAYAGADA	Rayagada	Trf2-12.5MV	Metered	Functional	31.03.2023	MIXED	NA	NA	NA	OPT01848	1	20.9370		20.94	BST BILL	
B.91	TPSODL	RAYAGADA	132/33kV	RED	RAYAGADA	Rayagada	Trf3-20MVA	Metered	Functional	31.03.2023	MIXED	NA	NA	NA	OPT01809	1	34.8579		34.86	BST BILL	
B.92	TPSODL	JEYPORE	33KV Balimel	JED	JEYPORE SDC	Saptadhara S	33KV Balimel	Metered	Functional	31.03.2023	MIXED	NA	NA	NA	ORA00051	1	0.2704		0.27	BST BILL	
B.93	TPSODL	BHANJANAG	Manamunda	BOED	MANAMUND	Sonepur	Manamunda	Metered	Functional	31.03.2023	MIXED	NA	NA	NA	OPT01720	1	69.6271		69.63	BST BILL	
B.94	TPSODL	JEYPORE	HAL Feeder 1	KED	SUNABEDA	Sunabeda	HAL Feeder 1	Metered	Functional	31.03.2023	MIXED	NA	NA	NA	OPT01892	1	40.8173		40.82	BST BILL	
B.95	TPSODL	JEYPORE	132/33kV	KED	SUNABEDA	Sunabeda	Trf1-12.5MV	Metered	Functional	31.03.2023	MIXED	NA	NA	NA	OPT01890	1	38.8015		38.80	BST BILL	
B.96	TPSODL	JEYPORE	132/33kV	KED	SUNABEDA	Sunabeda	Trf2-12.5MV	Metered	Functional	31.03.2023	MIXED	NA	NA	NA	OPT01888	1	37.5704		37.57	BST BILL	

B.97	TPSODL	JEYPORE	132/33kV	KED	SUNABEDA	Sunabeda	Trf3-20MVA	Metered	Functional	31.03.2023	MIXED	NA	NA	NA	OPT01891	1	60.1452		60.15	BST BILL	
B.98	TPSODL	JEYPORE	Mukhiguda F	NED	NAWARANGI	Tentulikhunt	Mukhiguda F	Metered	Functional	31.03.2023	MIXED	NA	NA	NA	OPT01790	1	-6.5501		-6.55	BST BILL	
B.99	TPSODL	JEYPORE	132/33kV	NED	NAWARANGI	Tentulikhunt	Trf1-20MVA	Metered	Functional	31.03.2023	MIXED	NA	NA	NA	OPT01900	1	34.9697		34.97	BST BILL	
B.100	TPSODL	JEYPORE	132/33kV	NED	NAWARANGI	Tentulikhunt	Trf2-20MVA	Metered	Functional	31.03.2023	MIXED	NA	NA	NA	OPT01902	1	33.2463		33.25	BST BILL	
B.101	TPSODL	JEYPORE	132/33kV	NED	NAWARANGI	Tentulikhunt	Trf3-20 MVA	Metered	Functional	31.03.2023	MIXED	NA	NA	NA	APM12627	1	22.8230		22.82	BST BILL	
B.102	TPSODL	JEYPORE	Vento Energy	NED	NAWARANGI	Tentulikhunt	Vento Energy	Metered	Functional	31.03.2023	MIXED	NA	NA	NA	Y0639836	1	0.3881	0.39	0.00	BST BILL	
B.103	TPSODL	RAYAGADA	Bhalumaska	RED	THERUBALLI	Therubali	Bhalumaska	Metered	Functional	31.03.2023	MIXED	NA	NA	NA	OPT01439	1	15.5360		15.54	BST BILL	
B.104	TPSODL	RAYAGADA	JK Feeder 13	RED	RAYAGADA	Therubali	JK Feeder 13	Metered	Functional	31.03.2023	MIXED	NA	NA	NA	OPT01669	1	16.22		16.22	BST BILL	
B.105	TPSODL	RAYAGADA	132/33kV	RED	THERUBALLI	Therubali	Trf1-12.5MV	Metered	Functional	31.03.2023	MIXED	NA	NA	NA	OPT01398	1	27.13		27.13	BST BILL	
B.106	TPSODL	RAYAGADA	132/33kV	RED	THERUBALLI	Therubali	Trf2-12.5MV	Metered	Functional	31.03.2023	MIXED	NA	NA	NA	OPT01226	1	24.98		24.98	BST BILL	
B.107	TPSODL	JEYPORE	132/33kV	NED	UMERKOTE	Umerkote	Trf1-20MVA	Metered	Functional	31.03.2023	MIXED	NA	NA	NA	OPT00674	1	85.14		85.14	BST BILL	
B.108	TPSODL	JEYPORE	132/33kV	NED	UMERKOTE	Umerkote	Trf2-20MVA	Metered	Functional	31.03.2023	MIXED	NA	NA	NA	OPT01238	1	87.49		87.49	BST BILL	
B.108	GSS Station Consumption							Metered	Functional	31.03.2023	MIXED	NA	NA	NA				4.26	-4.26	BST BILL	
B.13401	**Total (MU)**																**4263.34**	**59.39**			
B.13402	**Net input energy at DISCOM periphery (MU)**																**4203.95**				

Color code			Parameter
			Please enter voltage level or leave blank
			Please enter feeder id and name or leave blank
			Enter meter no or leave blank
			Enter CT/PT ratio or leave blank
0			Please enter numeric value or 0
			Please select yes or no from list
			Formula protected

I/We undertake that the information supplied in this Document and Pro-forma is accurate to the best of my knowledge and if any of the information supplied is found to be incorrect and such information result into loss to the Central Government or State Government or any of the authority under them or any other person affected, I/we undertake to indemnify such loss.

Authorised Signatory and Seal

Vijay Parkash Sharma
Chief Commercial Services
TPSODL,Berhampur,Gm

Name of Authorised Signatory:
Name of the DISCOM:
Full Address:-

Seal

Signature:-
Name of Energy Manager*:
Registration Number:

RATAN KUMAR
EA-32475/24

Details of Input Energy Sources								
Period For Apr'22 To Mar'23								
A. Generation at Transmission Periphery (Details)								
S.No.	Name of Generation Station	Generation Capacity (In MW)	Type of Station Generation (Based- Solid (Coal ,Lignite)/Liquid/Gas/Renewable (biomass-bagasse)/Others)	Type of Contract (in years/months/days)	Type of Grid (Intra-state/Inter-state)	Point of Connection (POC) Loss MU	Voltage Level (At input)	Remarks (Source of data)
	NTPC							
1	FSTPS-III	500	Coal		Inter-State			GRIDCO
2	KhSTPS-II	1500	Coal		Inter-State			GRIDCO
3	TSTPS-I	1000	Coal		Inter-State			GRIDCO
4	TSTPS-II	2000	Coal		Inter-State			GRIDCO
5	DSTPS-I & II	1600	Coal		Inter-State			GRIDCO
	Central Thermal							
6	TSTPS –I	1000	Coal		Inter-State			GRIDCO
7	TSTPS –II	2000	Coal		Inter-State			GRIDCO
8	FSTPS-I& II	1600	Coal		Inter-State			GRIDCO
9	FSTPS-III	500	Coal		Inter-State			GRIDCO
10	KhSTPS–I	840	Coal		Inter-State			GRIDCO
11	KhSTPS–II	1500	Coal		Inter-State			GRIDCO
12	DSTPS (Unit-I &II)	1600	Coal		Inter-State			GRIDCO
13	Meenakshi Power Ltd	37	Others		Inter-State		132KV	GRIDCO
14	Utkal Alumina	90	Coal		Inter-State		220KV	GRIDCO
15	NALCO (Damanjodi)	74	Coal		Inter-State		132KV	GRIDCO
16	Abacus Holding Pvt Ltd	1	Renewable		Inter-State		11KV	GRIDCO
17	JK Paper Ltd, Theruvali	25	Biomass		Inter-State		132KV	GRIDCO
18	GEDCOL, Manmunda	20	Renewable		Inter-State		33KV	GRIDCO
19	Vento Power & Energy Ltd	40	Renewable		Inter-State		132KV	GRIDCO
20	IMFA Solar	4.5	Renewable		Inter-State		33KV	GRIDCO
21	Ltd	25	Renewable		Inter-State		33KV	GRIDCO
22	Balimela Power House	510	Others		Inter-State		220KV	GRIDCO
23	Upper Kolab Power House	320	Others		Inter-State		220KV	GRIDCO
24	Machhkund Power House	60	Others		Inter-State		132KV	GRIDCO
25	GEDCOL, Guhipita	2	Renewable		Inter-State		33KV	GRIDCO

B. Embedded Generation in DISCOM Area

S.No	Name of Generation Station	Generation Capacity (In MW)	Tytpe of Station (Generation Based-Solid/Liquid/Gas/Renewable/Others)	Type of Contract	Type of Grid	Voltage Level (KVA)	Circle Load (MW)	Received at Circle (KVA)	Received at Circle (In MU)	Division Level Load (MW)	Received at Division Level (KVA)	Received at Division Level (In MU)	Sub-Division Level Load (MW)	Received at Sub-Division Level (KVA)	Received at Sub-Division Level (In MU)	Remarks (Source of data)
1	SWOSTI CHILIKA RESORT	3.6	Renewable	Net Metering	Renewable Source	11 KV	BERHAMPUR 11.1566		BERHAMPUR 0.17	GNED 9.0812		GNED 0.131	KHALLIKOTE 3.6		KHALLIKOTE 0.003	
2	ALAGAMTED PLANTATIONS	4.1616	Renewable	Net Metering	Renewable Source	33 KV	BERHAMPUR 11.1566		BERHAMPUR 0.17	GNED 9.0812		GNED 0.131	CHATRAPUR 4.1696		CHATRAPUR 0.116	
3	AA TARA TARINI CASHEW IN	1.2816	Renewable	Net Metering	Renewable Source	11 KV	BERHAMPUR 11.1566		BERHAMPUR 0.17	GNED 9.0812		GNED 0.131	RAMBHA 1.3116		RAMBHA 0.012	
4	LIGHT HOUSE	0.03	Renewable	Net Metering	Renewable Source	11 KV	BERHAMPUR 11.1566		BERHAMPUR 0.17	GNED 9.0812		GNED 0.131	RAMBHA 1.3116		RAMBHA 0.012	
5	SMT .SUNITA PANDA	0.008	Renewable	Net Metering	Renewable Source	230 V	BERHAMPUR 11.1566		BERHAMPUR 0.17	GNED 9.0812		GNED 0.131	CHATRAPUR 4.1696		CHATRAPUR 0.116	
6	NDUSTRIESPROP: PRADEEP	0.8424	Renewable	Net Metering	Renewable Source	11 KV	BERHAMPUR 11.1566		BERHAMPUR 0.17	PSED 0.8424		PSED 0.014	KODALA 0.8424		KODALA 0.014	
7	SANKAR EYE HOSPITAL	1.224	Renewable	Net Metering	Renewable Source	11 KV	BERHAMPUR 11.1566		BERHAMPUR 0.17	HED 1.233		HED 0.025	HINJILICUT 1.233		HINJILICUT 0.025	
8	CRETERY RMC, COLD STORA	0.009	Renewable	Net Metering	Renewable Source	400 V	BERHAMPUR 11.1566		BERHAMPUR 0.17	HED 1.233		HED 0.025	HINJILICUT 1.233		HINJILICUT 0.025	
9	H. Q. HOSPITAL	1.120032	Renewable	Net Metering	Renewable Source	33 KV	BHANJANAGAR 1.360032		BHANJANAGAR 0.00	PED 1.120032		PED 0.001	BALLIGUDA 1.120032		BALLIGUDA 0.001	
10	COLLECTORATE	0.24	Renewable	Net Metering	Renewable Source	11 KV	BHANJANAGAR 1.360032		BHANJANAGAR 0.00	BoED 0.24		BoED 0	Boudh 0.24		Boudh 0	
11	M/S. RAMKRISHNA MISSION	1.08	Renewable	Net Metering	Renewable Source	11 KV	RAYAGADA 12.260436		RAYAGADA 0.161	RED 1.51392		RED 0.146	BISSAM CUTTACK 1.125		BISSAM CUTTACK 0.119	
12	CHIEF MANAGER*	0.153	Renewable	Net Metering	Renewable Source	11 KV	RAYAGADA 12.260436		RAYAGADA 0.161	RED 1.51392		RED 0.146	RAYAGADA 0.38892		RAYAGADA 0.027	
13	TARINI FILLING STATION	0.024	Renewable	Net Metering	Renewable Source	400 V	RAYAGADA 12.260436		RAYAGADA 0.161	RED 1.51392		RED 0.146	RAYAGADA 0.38892		RAYAGADA 0.027	
14	COLLECTORATE	0.0504	Renewable	Net Metering	Renewable Source	400 V	RAYAGADA 12.260436		RAYAGADA 0.161	RED 1.51392		RED 0.146	RAYAGADA 0.38892		RAYAGADA 0.027	
15	L. V. PRASAD EYE INSTITUTE	0.156	Renewable	Net Metering	Renewable Source	11 KV	RAYAGADA 12.260436		RAYAGADA 0.161	RED 1.51392		RED 0.146	RAYAGADA 0.38892		RAYAGADA 0.027	
16	SECRETARY	0.045	Renewable	Net Metering	Renewable Source	400 V	RAYAGADA 12.260436		RAYAGADA 0.161	RED 1.51392		RED 0.146	BISSAM CUTTACK 1.125		BISSAM CUTTACK 0.119	
17	ALU RAMA RAO	0.00552	Renewable	Net Metering	Renewable Source	400 V	RAYAGADA 12.260436		RAYAGADA 0.161	RED 1.51392		RED 0.146	RAYAGADA 0.38892		RAYAGADA 0.027	
18	THE REGISTRER (CUTM)	6.12	Renewable	Net Metering	Renewable Source	33 KV	RAYAGADA 12.260436		RAYAGADA 0.161	PKED 6.594		PKED 0.014	UPPALADA 6.12		UPPALADA 0	
19	COLLECTORATE	0.15	Renewable	Net Metering	Renewable Source	400 V	RAYAGADA 12.260436		RAYAGADA 0.161	PKED 6.594		PKED 0.014	PARALAKHEMUNDI 0.393		PARALAKHEMUNDI 0.004	
20	LIC BUILDING	0.234	Renewable	Net Metering	Renewable Source	11 KV	RAYAGADA 12.260436		RAYAGADA 0.161	PKED 6.594		PKED 0.014	PARALAKHEMUNDI 0.393		PARALAKHEMUNDI 0.004	
21	AR, FSSM PLANT AT TAMAY	0.045	Renewable	Net Metering	Renewable Source	400 V	RAYAGADA 12.260436		RAYAGADA 0.161	PKED 6.594		PKED 0.014	KASHINAGAR 0.063		KASHINAGAR 0.008	
22	E STATION OFFICER, BETAGI	0.009	Renewable	Net Metering	Renewable Source	400 V	RAYAGADA 12.260436		RAYAGADA 0.161	PKED 6.594		PKED 0.014	PARALAKHEMUNDI 0.393		PARALAKHEMUNDI 0.004	
23	ARGE FIRE STATION, KASHIN	0.012	Renewable	Net Metering	Renewable Source	400 V	RAYAGADA 12.260436		RAYAGADA 0.161	PKED 6.594		PKED 0.014	KASHINAGAR 0.063		KASHINAGAR 0.008	
24	FIRE STATION, GUMMA	0.006	Renewable	Net Metering	Renewable Source	400 V	RAYAGADA 12.260436		RAYAGADA 0.161	PKED 6.594		PKED 0.014	KASHINAGAR 0.063		KASHINAGAR 0.008	
25	O/C FIRE STATION MOHANA	0.009	Renewable	Net Metering	Renewable Source	400 V	RAYAGADA 12.260436		RAYAGADA 0.161	PKED 6.594		PKED 0.014	MOHANA 0.009		MOHANA 0.002	
26	E STATION OFFICE, R.UDAYA	0.009	Renewable	Net Metering	Renewable Source	400 V	RAYAGADA 12.260436		RAYAGADA 0.161	PKED 6.594		PKED 0.014	R.UDAYAGIRI 0.009		R.UDAYAGIRI 0	
27	GIET	3.944016	Renewable	Net Metering	Renewable Source	11 KV	RAYAGADA 12.260436		RAYAGADA 0.161	GED 4.152516		GED 0.001	GUNUPUR 4.128516		GUNUPUR 0	
28	M S.B.I. GUNUPUR , GUNUPU	0.1605	Renewable	Net Metering	Renewable Source	400 V	RAYAGADA 12.260436		RAYAGADA 0.161	GED 4.152516		GED 0.001	GUNUPUR 4.128516		GUNUPUR 0	
29	MMISSIONING & TRIAL RUN	0.024	Renewable	Net Metering	Renewable Source	400 V	RAYAGADA 12.260436		RAYAGADA 0.161	GED 4.152516		GED 0.001	GUNUPUR 4.128516		GUNUPUR 0	
30	EATMENT FACILITY CENTRE,	0.024	Renewable	Net Metering	Renewable Source	11 KV	RAYAGADA 12.260436		RAYAGADA 0.161	GED 4.152516		GED 0.001	GUMUDA 0.024		GUMUDA 0.001	
31	LIC OF INDIA	2.7288	Renewable	Net Metering	Renewable Source	11 KV	CITY 5.196216		CITY 0.267	BED I 3.828216		BED I 0.11	Medical 3.0168		Medical 0.009	
32	Mr. SURA KISHORE MISHRA	0.075	Renewable	Net Metering	Renewable Source	400 V	CITY 5.196216		CITY 0.267	BED I 3.828216		BED I 0.11	BIJIPUR 0.075		BIJIPUR 0.003	
33	VIJAY BHAWAN	0.246	Renewable	Net Metering	Renewable Source	11 KV	CITY 5.196216		CITY 0.267	BED I 3.828216		BED I 0.11	SUB.DIV.NO-2 0.414		SUB.DIV.NO-2 0.06	
34	MAIN POST OFFICE	0.004476	Renewable	Net Metering	Renewable Source	400 V	CITY 5.196216		CITY 0.267	BED I 3.828216		BED I 0.11	Industrial 0.037476		Industrial 0.004	
35	GHT KEEPER, GOPALPUR LIC	0.105	Renewable	Net Metering	Renewable Source	11 KV	CITY 5.196216		CITY 0.267	BED I 3.828216		BED I 0.11	Gopalpur 0.28494		Gopalpur 0.034	
36	SUBASH CHANDRA SAHU	0.126	Renewable	Net Metering	Renewable Source	400 V	CITY 5.196216		CITY 0.267	BED I 3.828216		BED I 0.11	SUB.DIV.NO-2 0.414		SUB.DIV.NO-2 0.06	
37	gapahandi Regulated marke	0.117	Renewable	Net Metering	Renewable Source	400 V	CITY 5.196216		CITY 0.267	BED I 3.828216		BED I 0.11	Gopalpur 0.28494		Gopalpur 0.034	
38	Neurology and Radiology Ce	0.18	Renewable	Net Metering	Renewable Source	11 KV	CITY 5.196216		CITY 0.267	BED I 3.828216		BED I 0.11	Medical 3.0168		Medical 0.009	
39	LIC OFFICE	0.09	Renewable	Net Metering	Renewable Source	400 V	CITY 5.196216		CITY 0.267	BED I 3.828216		BED I 0.11	Medical 3.0168		Medical 0.009	
40	Sale Tax Office Bus Stop	0.003	Renewable	Net Metering	Renewable Source	400 V	CITY 5.196216		CITY 0.267	BED I 3.828216		BED I 0.11	Medical 3.0168		Medical 0.009	
41	Bibek Vihar Bus Stop	0.003	Renewable	Net Metering	Renewable Source	400 V	CITY 5.196216		CITY 0.267	BED I 3.828216		BED I 0.11	Medical 3.0168		Medical 0.009	
42	Medical Gate Bus Stop	0.003	Renewable	Net Metering	Renewable Source	400 V	CITY 5.196216		CITY 0.267	BED I 3.828216		BED I 0.11	Medical 3.0168		Medical 0.009	
43	Bijipur Junction Bus Stop	0.003	Renewable	Net Metering	Renewable Source	400 V	CITY 5.196216		CITY 0.267	BED I 3.828216		BED I 0.11	Industrial 0.037476		Industrial 0.004	
44	Old Bus Stand Bus Stop	0.003	Renewable	Net Metering	Renewable Source	400 V	CITY 5.196216		CITY 0.267	BED I 3.828216		BED I 0.11	Industrial 0.037476		Industrial 0.004	
45	y Hospital Sulabha Souchal	0.006	Renewable	Net Metering	Renewable Source	400 V	CITY 5.196216		CITY 0.267	BED I 3.828216		BED I 0.11	Industrial 0.037476		Industrial 0.004	
46	City Hospital Bus Stop	0.003	Renewable	Net Metering	Renewable Source	400 V	CITY 5.196216		CITY 0.267	BED I 3.828216		BED I 0.11	Industrial 0.037476		Industrial 0.004	
47	SRI PRABHAKAR MOHANTY	0.009	Renewable	Net Metering	Renewable Source	400 V	CITY 5.196216		CITY 0.267	BED I 3.828216		BED I 0.11	SUB.DIV.NO-2 0.414		SUB.DIV.NO-2 0.06	
48	SMT LIPIKA PANDA	0.009	Renewable	Net Metering	Renewable Source	400 V	CITY 5.196216		CITY 0.267	BED I 3.828216		BED I 0.11	SUB.DIV.NO-2 0.414		SUB.DIV.NO-2 0.06	
49	SRIKANTA TRIPATHY	0.009	Renewable	Net Metering	Renewable Source	400 V	CITY 5.196216		CITY 0.267	BED I 3.828216		BED I 0.11	SUB.DIV.NO-2 0.414		SUB.DIV.NO-2 0.06	
50	Smt.Binodini Rath	0.009	Renewable	Net Metering	Renewable Source	400 V	CITY 5.196216		CITY 0.267	BED I 3.828216		BED I 0.11	Medical 3.0168		Medical 0.009	
51	RI BIJET KUMAR SATAPATH	0.015	Renewable	Net Metering	Renewable Source	230 V	CITY 5.196216		CITY 0.267	BED I 3.828216		BED I 0.11	SUB.DIV.NO-2 0.414		SUB.DIV.NO-2 0.06	
52	Smt. Nirupama Sahoo	0.009	Renewable	Net Metering	Renewable Source	400 V	CITY 5.196216		CITY 0.267	BED I 3.828216		BED I 0.11	Gopalpur 0.28494		Gopalpur 0.034	
53	Smt. Usha Rani Acharya	0.00294	Renewable	Net Metering	Renewable Source	400 V	CITY 5.196216		CITY 0.267	BED I 3.828216		BED I 0.11	Gopalpur 0.28494		Gopalpur 0.034	
54	DHRITRI PATRO	0.015	Renewable	Net Metering	Renewable Source	230 V	CITY 5.196216		CITY 0.267	BED I 3.828216		BED I 0.11	GOPALPUR 0.28494		GOPALPUR 0.034	
55	PRABHAKAR PANDA	0.009	Renewable	Net Metering	Renewable Source	400 V	CITY 5.196216		CITY 0.267	BED I 3.828216		BED I 0.11	GOPALPUR 0.28494		GOPALPUR 0.034	
56	G.GOURA PRASAD REEDY	0.015	Renewable	Net Metering	Renewable Source	400 V	CITY 5.196216		CITY 0.267	BED I 3.828216		BED I 0.11	GOPALPUR 0.28494		GOPALPUR 0.034	
57	SUPRABHA MAHARANA	0.012	Renewable	Net Metering	Renewable Source	400 V	CITY 5.196216		CITY 0.267	BED I 3.828216		BED I 0.11	GOPALPUR 0.28494		GOPALPUR 0.034	
58	al Cinema Hall Sulabha Sou	0.006	Renewable	Net Metering	Renewable Source	230 V	CITY 5.196216		CITY 0.267	BED I 3.828216		BED I 0.11	Industrial 0.037476		Industrial 0.004	
59	pur Bandha Sulabha Soucha	0.006	Renewable	Net Metering	Renewable Source	230 V	CITY 5.196216		CITY 0.267	BED I 3.828216		BED I 0.11	Industrial 0.037476		Industrial 0.004	
60	Ashok Kumar Padhy	0.006	Renewable	Net Metering	Renewable Source	400 V	CITY 5.196216		CITY 0.267	BED I 3.828216		BED I 0.11	Industrial 0.037476		Industrial 0.004	
61	C.S. BHUYAN	0.015	Renewable	Net Metering	Renewable Source	400 V	CITY 5.196216		CITY 0.267	BED II 0.807		BED II 0.085	SUB.DIVISION NO-1 0.106		SUB.DIVISION NO-1 0.032	
62	ANCHARANI DILESWSAR RA	0.069	Renewable	Net Metering	Renewable Source	400 V	CITY 5.196216		CITY 0.267	BED II 0.807		BED II 0.085	SUB.DIVISION NO-3 0.701		SUB.DIVISION NO-3 0.053	
63	Laxmi Narayan Pattnaik	0.009	Renewable	Net Metering	Renewable Source	400 V	CITY 5.196216		CITY 0.267	BED II 0.807		BED II 0.085	SUB.DIVISION NO-1 0.106		SUB.DIVISION NO-1 0.032	
64	SANTOSH KUMAR SAHU	0.033	Renewable	Net Metering	Renewable Source	400 V	CITY 5.196216		CITY 0.267	BED II 0.807		BED II 0.085	SUB.DIVISION NO-1 0.106		SUB.DIVISION NO-1 0.032	
65	BeMC COMMISSIONER	0.294	Renewable	Net Metering	Renewable Source	400 V	CITY 5.196216		CITY 0.267	BED II 0.807		BED II 0.085	SUB.DIVISION NO-3 0.701		SUB.DIVISION NO-3 0.053	
66	RUN KU PANDEY, C/O BeM	0.006	Renewable	Net Metering	Renewable Source	400 V	CITY 5.196216		CITY 0.267	BED II 0.807		BED II 0.085	SUB.DIVISION NO-1 0.106		SUB.DIVISION NO-1 0.032	
67	RUN KU PANDEY, C/O BeM	0.006	Renewable	Net Metering	Renewable Source	400 V	CITY 5.196216		CITY 0.267	BED II 0.807		BED II 0.085	SUB.DIVISION NO-1 0.106		SUB.DIVISION NO-1 0.032	
68	RUN KU PANDEY, C/O BeM	0.006	Renewable	Net Metering	Renewable Source	400 V	CITY 5.196216		CITY 0.267	BED II 0.807		BED II 0.085	SUB.DIVISION NO-1 0.106		SUB.DIVISION NO-1 0.032	
69	RUN KU PANDEY, C/O BeM	0.003	Renewable	Net Metering	Renewable Source	400 V	CITY 5.196216		CITY 0.267	BED II 0.807		BED II 0.085	SUB.DIVISION NO-1 0.106		SUB.DIVISION NO-1 0.032	
70	RUN KU PANDEY, C/O BeM	0.006	Renewable	Net Metering	Renewable Source	400 V	CITY 5.196216		CITY 0.267	BED II 0.807		BED II 0.085	SUB.DIVISION NO-3 0.701		SUB.DIVISION NO-3 0.053	
71	RUN KU PANDEY, C/O BeM	0.006	Renewable	Net Metering	Renewable Source	400 V	CITY 5.196216		CITY 0.267	BED II 0.807		BED II 0.085	SUB.DIVISION NO-1 0.106		SUB.DIVISION NO-1 0.032	
72	RUN KU PANDEY, C/O BeM	0.006	Renewable	Net Metering	Renewable Source	400 V	CITY 5.196216		CITY 0.267	BED II 0.807		BED II 0.085	SUB.DIVISION NO-3 0.701		SUB.DIVISION NO-3 0.053	
73	RUN KU PANDEY, C/O BeM	0.003	Renewable	Net Metering	Renewable Source	400 V	CITY 5.196216		CITY 0.267	BED II 0.807		BED II 0.085	SUB.DIVISION NO-1 0.106		SUB.DIVISION NO-1 0.032	
74	RUN KU PANDEY, C/O BeM	0.001	Renewable	Net Metering	Renewable Source	400 V	CITY 5.196216		CITY 0.267	BED II 0.807		BED II 0.085	SUB.DIVISION NO-1 0.106		SUB.DIVISION NO-1 0.032	
75	L & RESEARCH SOCIETY ,C/O	0.189	Renewable	Net Metering	Renewable Source	11 KV	CITY 5.196216		CITY 0.267	BED II 0.807		BED II 0.085	SUB.DIVISION NO-3 0.701		SUB.DIVISION NO-3 0.053	
76	ON &WELFARE TRUST ,C/O	0.096	Renewable	Net Metering	Renewable Source	11 KV	CITY 5.196216		CITY 0.267	BED II 0.807		BED II 0.085	SUB.DIVISION NO-3 0.701		SUB.DIVISION NO-3 0.053	
77	SMT JHUNUBALA KAR	0.009	Renewable	Net Metering	Renewable Source	400 V	CITY 5.196216		CITY 0.267	BED II 0.807		BED II 0.085	SUB.DIVISION NO-1 0.106		SUB.DIVISION NO-1 0.032	
78	BISHNUPRIYA Mohanty	0.009	Renewable	Net Metering	Renewable Source	400 V	CITY 5.196216		CITY 0.267	BED II 0.807		BED II 0.085	SUB.DIVISION NO-1 0.106		SUB.DIVISION NO-1 0.032	

79	Mr SANTANU KUMAR SAHU	0.015	Renewable	Net Metering	Renewable Source	230 V	CITY 5.196216		CITY 0.267	BED II 0.807		BED II 0.085	SUB.DIVISION NO-3 0.701		SUB.DIVISION NO-3 0.053	
80	DR. J. APPA RAO	0.018	Renewable	Net Metering	Renewable Source	230 V	CITY 5.196216		CITY 0.267	BED II 0.807		BED II 0.085	SUB.DIVISION NO-3 0.701		SUB.DIVISION NO-3 0.053	
81	BODDEPALI NALINI	0.008	Renewable	Net Metering	Renewable Source	400 V	CITY 5.196216		CITY 0.267	BED II 0.807		BED II 0.085	SUB.DIVISION NO-3 0.701		SUB.DIVISION NO-3 0.053	
82	ANAKA DURGA WOOD WO	0.147	Renewable	Net Metering	Renewable Source	11 KV	CITY 5.196216		CITY 0.267	BED III 0.561		BED III 0.072	KANISI 0.333		KANISI 0.049	
83	KONARK INDUSTRIES	0.057	Renewable	Net Metering	Renewable Source	400 V	CITY 5.196216		CITY 0.267	BED III 0.561		BED III 0.072	SUB.DIVISION NO-4 0.213		SUB.DIVISION NO-4 0.022	
84	/S. RUBY EYE HOSPITAL	0.15	Renewable	Net Metering	Renewable Source	11 KV	CITY 5.196216		CITY 0.267	BED III 0.561		BED III 0.072	SUB.DIVISION NO-4 0.213		SUB.DIVISION NO-4 0.022	
85	INDAR EDUCA. TRUSTSANKA	0.186	Renewable	Net Metering	Renewable Source	11 KV	CITY 5.196216		CITY 0.267	BED III 0.561		BED III 0.072	Kanisi 0.333		Kanisi 0.049	
86	HARI MALANA	0.015	Renewable	Net Metering	Renewable Source	400 V	CITY 5.196216		CITY 0.267	BED III 0.561		BED III 0.072	NO-IV 0.015		NO-IV 0.001	
87	PUSPALATA DASH	0.006	Renewable	Net Metering	Renewable Source	400 V	CITY 5.196216		CITY 0.267	BED III 0.561		BED III 0.072	SUB.DIVISION NO-4 0.213		SUB.DIVISION NO-4 0.022	
88	M/S Sai residency.	0.03	Renewable	Net Metering	Renewable Source	400 V	ASKA 0.078		ASKA 0.004	AED I 0.03		AED I 0.004	ASKA 0.03		ASKA 0.004	
89	TIVE OFFICER, NAC, DIGAPA	0.03	Renewable	Net Metering	Renewable Source	400 V	ASKA 0.078		ASKA 0.004	GSED 0.048		GSED 0	DIGAPAHANDI 0.048		DIGAPAHANDI 0	
90	UCER WOMENS' COOPERAT	0.018	Renewable	Net Metering	Renewable Source	400 V	ASKA 0.078		ASKA 0.004	GSED 0.048		GSED 0	DIGAPAHANDI 0.048		DIGAPAHANDI 0	
91	PRAKASH VIDYALAYA	0.06	Renewable	Net Metering	Renewable Source	11 KV	JEYPORE 3.49812		JEYPORE 0.065	JED 0.23832		JED 0.019	JEYPORE SDO-I 0.11532		JEYPORE SDO-I 0.01	
92	THE EXECUTIVE ENGINEER	0.045	Renewable	Net Metering	Renewable Source	400 V	JEYPORE 3.49812		JEYPORE 0.065	JED 0.23832		JED 0.019	JEYPORE SDO-II 0.093		JEYPORE SDO-II 0.008	
93	ECUTIVE OFFICER NAC KOTP	0.03	Renewable	Net Metering	Renewable Source	11 KV	JEYPORE 3.49812		JEYPORE 0.065	JED 0.23832		JED 0.019	BORIGUMA 0.03		BORIGUMA 0.001	
94	I UMESH CH. MISHRA*	0.048	Renewable	Net Metering	Renewable Source	400 V	JEYPORE 3.49812		JEYPORE 0.065	JED 0.23832		JED 0.019	JEYPORE SDO-II 0.093		JEYPORE SDO-II 0.008	
95	SWATI SISU BIDYAMANDIR,	0.05532	Renewable	Net Metering	Renewable Source	400 V	JEYPORE 3.49812		JEYPORE 0.065	JED 0.23832		JED 0.019	JEYPORE SDO-I 0.11532		JEYPORE SDO-I 0.01	
96	ENT PLANT OF MUNICIPALIT	0.045	Renewable	Net Metering	Renewable Source	400 V	JEYPORE 3.49812		JEYPORE 0.065	NED 0.162		NED 0.007	NABARANGPUR 0.045		NABARANGPUR 0.002	
97	CIPAL ADARASH VIDYALAY,	0.06	Renewable	Net Metering	Renewable Source	400 V	JEYPORE 3.49812		JEYPORE 0.065	NED 0.162		NED 0.007	NAWARANGPUR 0.117		NAWARANGPUR 0.005	
98	THE PRINCIPAL	0.057	Renewable	Net Metering	Renewable Source	400 V	JEYPORE 3.49812		JEYPORE 0.065	NED 0.162		NED 0.007	NAWARANGPUR 0.117		NAWARANGPUR 0.005	
99	HIEF MANAGER, SBI, MALKA	0.18	Renewable	Net Metering	Renewable Source	11 KV	JEYPORE 3.49812		JEYPORE 0.065	MED 0.225		MED 0	MALKANGIRI 0.225		MALKANGIRI 0	
100	FICER, MALKANGIRI MUNIC	0.045	Renewable	Net Metering	Renewable Source	400 V	JEYPORE 3.49812		JEYPORE 0.065	MED 0.225		MED 0	Malkangiri 0.225		Malkangiri 0	
101	ECO RAILWAY, KORAPUT	0.8928	Renewable	Net Metering	Renewable Source	11 KV	JEYPORE 3.49812		JEYPORE 0.065	KED 2.8728		KED 0.039	KORAPUT 1.0728		KORAPUT 0.008	
102	202, KOBRA BATALION	1.8	Renewable	Net Metering	Renewable Source	11 KV	JEYPORE 3.49812		JEYPORE 0.065	KED 2.8728		KED 0.039	SUNABEDA 1.8		SUNABEDA 0.031	
103	SOG TRAINING CENTRE	0.18	Renewable	Net Metering	Renewable Source	400 V	JEYPORE 3.49812		JEYPORE 0.065	KED 2.8728		KED 0.039	Koraput 1.0728		Koraput 0.008	

(Details of Consumers)						
Summary of Energy						
Period For Apr'22 To Mar'23						
S.No	Type of Consumers	Category of Consumers (EHT/HT/LT/Others)	Voltage Level (In Voltage)	No of Consumers	Total Consumption (In MU)	Remarks (Source of data)
1	Domestic	HT/LT	11000/400/230	2172186	1445.398011	
2	Commercial	HT/LT	11000/400/230	102275	313.828508	
3	IP Sets					
4	Hor. & Nur. & Coffee/Tea & Rubber (Metered)					
5	Hor. & Nur. & Coffee/Tea & Rubber (Flat)					
6	Heating and Motive Power					
7	Water Supply	HT/LT	33000/11000/400/230	5242	63.418938	
8	Public Lighting	LT	400/230	6712	35.945100	
9	HT Water Supply	HT	33000/11000	71	29.327619	
10	HT Industrial	EHT/HT	220000/132000/33000/11000/400	318	642.912886	
11	Industrial (Small)	HT/LT	11000/400	2540	11.501832	
12	Industrial (Medium)	HT/LT	11000/400	1948	63.761613	
13	HT Commercial	HT/LT	33000/11000/400	138	42.020802	
14	Applicable to Government Hospitals & Hospitals					
15	Lift Irrigation Schemes/Lift Irrigation Soci	HT/LT	11000/33000/400/230	32413	108.361319	
16	HT Res. Apartments Applicable to all areas					
17	Mixed Load					
18	Government offices and department					
19	Others-1 (if any , specify in remarks)					
20	Others-2 (if any , specify in remarks)					
21	Others-3 (if any , specify in remarks)					
22	Others-4 (if any , specify in remarks)					
23	Others-5 (if any , specify in remarks)					
24	ALLIED AGRICULTURE ACTIVITIES	HT/LT	11000/33000/400/230	1433	30.937502	
25	ALLIED AGRO-INDUSTRIAL ACTIVITIES	HT/LT	11000/33000/400	81	2.738021	
26	RAILWAY TRACTION	EHT	220000/132000	12	290.440032	
27	SPECIFIED PUBLIC PURPOSE	HT/LT	11000/33000/400/230	16124	73.865470	
28						
			Total	2341493	3154.46	

(Details of Feeder-wise losses)

Period For Apr'22 To Mar'23

Sl No.	Zone	Received at Circle (In MU)	Received at Division (In MU)	Received at Sub-division (In MU)	Name of the Station	Feeder Code/ID	Feeder Name	Type of Feeder (Urban/Mixed/Industrial/Agricultural/Rural)	Type of feeder meter (AMI/AMR/Other)	Received at Feeder (Final in MU)	Feeder Consumption (In MU)	Final Net Export at Feeder Level (In MU)	T&D losses	AT&C losses	% Data Received through Automatically (if feeder AMR/AMI)	Remarks
1	TPSODL	RAYAGADA	PKED	KASINAGAR	KHANDVA		ALLADA	RURAL	OTHER							
2	TPSODL	RAYAGADA	PKED	KASINAGAR	KHANDVA		SARA(KHANDAVA)	RURAL	OTHER							
3	TPSODL	RAYAGADA	PKED	KASINAGAR	KHARADA		KHARADA	RURAL	OTHER							
4	TPSODL	RAYAGADA	PKED	KASINAGAR	KHARADA		HADUBHANGI	RURAL	OTHER							
5	TPSODL	RAYAGADA	PKED	KASINAGAR	KHARADA		KARTAM	RURAL	OTHER							
6	TPSODL	BHANJANAGAR	PED	BALIGUDA	BALIGUDA		11 KV F-1 BALIGUDA HI	URBAN	OTHER							
7	TPSODL	BHANJANAGAR	PED	BALIGUDA	BALIGUDA		11 KV F-2 MUSUKULI	RURAL	OTHER							
8	TPSODL	BHANJANAGAR	PED	BALIGUDA	BALIGUDA		11 KV F-3 SINDRIGAON	RURAL	OTHER							
9	TPSODL	BHANJANAGAR	PED	BALIGUDA	BALIGUDA		11 KV F-4 BADAGAON	RURAL	OTHER							
10	TPSODL	BHANJANAGAR	PED	BALIGUDA	BALIGUDA		11 KV F-5 BATAGUDA	RURAL	OTHER							
11	TPSODL	BHANJANAGAR	PED	BALIGUDA	BALIGUDA		11 KV F-6 CHURCH	URBAN	OTHER							
12	TPSODL	BHANJANAGAR	PED	BALIGUDA	KOTAGADA		11 KV F-1 KOTAGADA T	URBAN	OTHER							
13	TPSODL	BHANJANAGAR	PED	BALIGUDA	KOTAGADA		11 KV F-2 SUBARNAGIR	RURAL	OTHER							
14	TPSODL	BHANJANAGAR	PED	BALIGUDA	KOTAGADA		11 KV F-3 DURGAPANG	RURAL	OTHER							
15	TPSODL	RAYAGADA	GED	GUMUDA	RAMANAGUDA		SULUDI	RURAL	OTHER							
16	TPSODL	RAYAGADA	GED	GUMUDA	RAMANAGUDA		BANGI	RURAL	OTHER							
17	TPSODL	RAYAGADA	GED	GUMUDA	MINAJHOLA		JHARODI	RURAL	OTHER							
18	TPSODL	RAYAGADA	GED	GUMUDA	MINAJHOLA		BANKILI	RURAL	OTHER							
19	TPSODL	RAYAGADA	GED	GUMUDA	MINAJHOLA		TANDIKANA	RURAL	OTHER							
20	TPSODL	ASKA	GSED	DIGAPAHANDI	BHISMAGIRI		11 KV F-3 NIMAKHANDI	RURAL	OTHER							
21	TPSODL	RAYAGADA	PKED	KASINAGAR	GUMMA		PADMAPUR	RURAL	OTHER							
22	TPSODL	RAYAGADA	PKED	KASINAGAR	GUMMA		GUMMA	RURAL	OTHER							
23	TPSODL	RAYAGADA	PKED	KASINAGAR	GUMMA		GAIBA	RURAL	OTHER							
24	TPSODL	RAYAGADA	PKED	KASINAGAR	GUMMA		BADA KOLAKUTA	RURAL	OTHER							
25	TPSODL	RAYAGADA	PKED	UPALADA	UPALADA		UPPALADA	RURAL	OTHER							
26	TPSODL	RAYAGADA	PKED	UPALADA	UPALADA		BAGHASALA	RURAL	OTHER							
27	TPSODL	BHANJANAGAR	PED	BALIGUDA	TUMUDIBANDHA		11 KV F-1 BELGHAR	RURAL	OTHER							
28	TPSODL	BHANJANAGAR	PED	BALIGUDA	TUMUDIBANDHA		11 KV F-2 MUNDIGADA	RURAL	OTHER							
29	TPSODL	BHANJANAGAR	PED	BALIGUDA	TUMUDIBANDHA		11 KV F-3 KURTAMAGA	RURAL	OTHER							
30	TPSODL	BHANJANAGAR	PED	BALIGUDA	TUMUDIBANDHA		11 KV F-4 TUMUDIBAND	URBAN	OTHER							
31	TPSODL	BHANJANAGAR	PED	BALIGUDA	TUMUDIBANDHA		11 KV F-5 TUMUDIBAND	RURAL	OTHER							
32	TPSODL	RAYAGADA	GED	GUMUDA	GUDARI		GUDARI TOWN	URBAN	OTHER							
33	TPSODL	RAYAGADA	GED	GUMUDA	GUDARI		M K RAI	RURAL	OTHER							
34	TPSODL	RAYAGADA	GED	GUMUDA	GUDARI		DHEPAGUDA	RURAL	OTHER							
35	TPSODL	RAYAGADA	PKED	PARALAKHEMUNDI	PARAKHEMUNDI NEW(RURAL)		KERANDI	RURAL	OTHER							
36	TPSODL	RAYAGADA	PKED	PARALAKHEMUNDI	PARAKHEMUNDI NEW(RURAL)		PHD	URBAN	OTHER							
37	TPSODL	RAYAGADA	PKED	PARALAKHEMUNDI	PARAKHEMUNDI NEW(RURAL)		MEDICAL	URBAN	OTHER							
38	TPSODL	RAYAGADA	PKED	PARALAKHEMUNDI	PARAKHEMUNDI NEW(RURAL)		JITM	RURAL	OTHER							
39	TPSODL	RAYAGADA	PKED	PARALAKHEMUNDI	PARAKHEMUNDI NEW(RURAL)		TOWN-4	RURAL	OTHER							
40	TPSODL	ASKA	GSED	DIGAPAHANDI	DIGAPAHANDI		11 KV F-1 PHD (DIGAPA	RURAL	OTHER							
41	TPSODL	ASKA	GSED	DIGAPAHANDI	DIGAPAHANDI		11 KV F-2 DIGAPAHAND	RURAL	OTHER							
42	TPSODL	ASKA	GSED	DIGAPAHANDI	DIGAPAHANDI		11 KV F-3 ANKORADA	RURAL	OTHER							
43	TPSODL	ASKA	GSED	DIGAPAHANDI	DIGAPAHANDI		11 KV F-4 DIGAPAHAND	URBAN	OTHER							
44	TPSODL	ASKA	GSED	DIGAPAHANDI	DIGAPAHANDI		11 KV F-5 PADMANAVP	RURAL	OTHER							
45	TPSODL	ASKA	GSED	DIGAPAHANDI	PUDAMARI		11 KV F-1 BHISMAGIRI (	RURAL	OTHER							
46	TPSODL	ASKA	GSED	DIGAPAHANDI	PUDAMARI		11 KV F-2 PUDAMARI	RURAL	OTHER							
47	TPSODL	ASKA	GSED	DIGAPAHANDI	PUDAMARI		11 KV F-3 DENGAUSTA	RURAL	OTHER							
48	TPSODL	RAYAGADA	PKED	UPALADA	GARABANDHA		GARABANDHA	RURAL	OTHER							
49	TPSODL	RAYAGADA	PKED	UPALADA	GARABANDHA		MAGADA	RURAL	OTHER							
50	TPSODL	RAYAGADA	PKED	UPALADA	GARABANDHA		GURANDI	RURAL	OTHER							
51	TPSODL	RAYAGADA	PKED	UPALADA	SOBARA		GANDAHATI	RURAL	OTHER							
52	TPSODL	RAYAGADA	PKED	UPALADA	SOBARA		DEULA	RURAL	OTHER							
53	TPSODL	RAYAGADA	PKED	UPALADA	SOBARA		LINGIPUR	RURAL	OTHER							
54	TPSODL	BHANJANAGAR	PED	BALIGUDA	K NUAGAON		11 KV F-1 KUDUTULI	RURAL	OTHER							
55	TPSODL	BHANJANAGAR	PED	BALIGUDA	K NUAGAON		11 KV F-2 MAHASINGH	RURAL	OTHER							
56	TPSODL	BHANJANAGAR	PED	BALIGUDA	K NUAGAON		11 KV F-3 SIRITIGUDA	RURAL	OTHER							
57	TPSODL	BHANJANAGAR	PED	BALIGUDA	K NUAGAON		11 KV F-4 TOWN STATI	URBAN	OTHER							
58	TPSODL	BHANJANAGAR	PED	BALIGUDA	SARANGAGADA		11 KV F-1 BANDHAGUD	RURAL	OTHER							
59	TPSODL	BHANJANAGAR	PED	BALIGUDA	SARANGAGADA		11 KV F-2 SALAGUDA	RURAL	OTHER							
60	TPSODL	BHANJANAGAR	PED	BALIGUDA	SARANGAGADA		11 KV F-3 SASIPADA	RURAL	OTHER							
61	TPSODL	BHANJANAGAR	PED	BALIGUDA	SARANGAGADA		11 KV F-4 SARANGAGAD	URBAN	OTHER							
62	TPSODL	ASKA	AED-I	ASKA	BALISIRA		11 KV F-1 NIMINA	RURAL	OTHER							
63	TPSODL	ASKA	AED-I	ASKA	BALISIRA		11 KV F-2 KAMAGADA/	RURAL	OTHER							
64	TPSODL	ASKA	AED-I	ASKA	BALISIRA		11 KV F-3 GUNTHAPADA	RURAL	OTHER							
65	TPSODL	ASKA	AED-I	ASKA	JAHADA		11 KV F-1 SINGHIPUR	RURAL	OTHER							
66	TPSODL	ASKA	AED-I	ASKA	JAHADA		11 KV F-2 JHARAPARI	RURAL	OTHER							
67	TPSODL	ASKA	AED-I	ASKA	JAHADA		11 KV F-3 PUTU	RURAL	OTHER							
68	TPSODL	BHANJANAGAR	PED	BALIGUDA	DARINGIBADI		11 KV F-1 RUKANBADI	URBAN	OTHER							
69	TPSODL	BHANJANAGAR	PED	BALIGUDA	DARINGIBADI		11 KV F-2 DASINGBADI	RURAL	OTHER							
70	TPSODL	BHANJANAGAR	PED	BALIGUDA	DARINGIBADI		11 KV F-3 SIMANBADI	RURAL	OTHER							
71	TPSODL	BHANJANAGAR	PED	PHULBANI	NUAPADAR		11 KV F-1 DIMBRIGUDA	RURAL	OTHER							
72	TPSODL	BHANJANAGAR	PED	PHULBANI	NUAPADAR		11 KV F-2 BHRUNGIJOD	RURAL	OTHER							
73	TPSODL	BHANJANAGAR	PED	PHULBANI	NUAPADAR		11 KV F-3 NUAPADAR	RURAL	OTHER							
74	TPSODL	BHANJANAGAR	PED	PHULBANI	NUAPADAR		11 KV F-4 SADANGIA	RURAL	OTHER							
75	TPSODL	ASKA	AED-I	ASKA	ASKA		11 KV F-1 JOKABANDHA	RURAL	OTHER							
76	TPSODL	ASKA	AED-I	ASKA	ASKA		11 KV F-2 ASKA MEDICA	URBAN	OTHER							
77	TPSODL	ASKA	AED-I	NUAGAON	ASKA		11 KV F-3 SHERAGADA (	RURAL	OTHER							
78	TPSODL	ASKA	AED-I	ASKA	ASKA		11 KV F-4 ASKA BUS STA	RURAL	OTHER							
79	TPSODL	ASKA	AED-I	ASKA	ASKA		11 KV F-5 GANGAPUR (A	RURAL	OTHER							
80	TPSODL	ASKA	AED-II	K.S.NAGAR	PAIKAJAMUNA		11 KV F-1 KANIARY	RURAL	OTHER	6.632475						
81	TPSODL	ASKA	AED-II	K.S.NAGAR	PAIKAJAMUNA		11 KV F-2 PAIKAJAMUN	RURAL	OTHER							
82	TPSODL	ASKA	AED-II	K.S.NAGAR	PAIKAJAMUNA		11 KV F-3 BARIDA	RURAL	OTHER							
83	TPSODL	BHANJANAGAR	PED	PHULBANI	PHULBANI		11 KV F-1 PHULBANI CO	RURAL	OTHER							
84	TPSODL	BHANJANAGAR	PED	PHULBANI	PHULBANI		11 KV F-2 PHULBANI BA	URBAN	OTHER							
85	TPSODL	BHANJANAGAR	PED	PHULBANI	PHULBANI		11 KV F-3 PHULBANI MB	URBAN	OTHER							
86	TPSODL	BHANJANAGAR	PED	PHULBANI	PHULBANI		11 KV F-4 PHULBANI SA	RURAL	OTHER							
87	TPSODL	BHANJANAGAR	PED	PHULBANI	PHULBANI		11 KV F-5 PHULBANI TO	URBAN	OTHER							

88	TPSODL	BHANJANAGAR	BNED	SORADA	ASURABANDHA		11 KV F-1 ASURABANDH	RURAL	OTHER							
89	TPSODL	BHANJANAGAR	BNED	SORADA	ASURABANDHA		11 KV F-2 DANTALINGI	RURAL	OTHER							
90	TPSODL	BHANJANAGAR	BNED	SORADA	ASURABANDHA		11 KV F-3 GAJALBADI	RURAL	OTHER							
91	TPSODL	BHANJANAGAR	BNED	SORADA	ASURABANDHA		11 KV F-4 BHAGABANPU	RURAL	OTHER							
92	TPSODL	ASKA	GSED	CHIKITI	CHIKITI		11 KV F-1 CHIKITI NAC	RURAL	OTHER							
93	TPSODL	ASKA	GSED	CHIKITI	CHIKITI		11 KV F-2 BAHANAPATI	RURAL	OTHER							
94	TPSODL	ASKA	GSED	CHIKITI	CHIKITI		11 KV F-3 KOTILINGI/RA	RURAL	OTHER							
95	TPSODL	ASKA	GSED	CHIKITI	CHIKITI		11 KV F-4 KRUSHNAPUR	RURAL	OTHER							
96	TPSODL	BHANJANAGAR	BNED	BHANJANAGAR-I	GAYAGANDA		11 KV F-1 KALINGAPADA	RURAL	OTHER							
97	TPSODL	BHANJANAGAR	BNED	BHANJANAGAR-I	GAYAGANDA		11 KV F-2 GAYAGANDA	RURAL	OTHER							
98	TPSODL	BHANJANAGAR	BNED	BHANJANAGAR-I	GAYAGANDA		11 KV F-3 RUDHAPADAI	RURAL	OTHER							
99	TPSODL	BHANJANAGAR	BNED	BHANJANAGAR-I	GAYAGANDA		11 KV KOKOLABA	RURAL	OTHER							
100	TPSODL	BHANJANAGAR	BNED	SORADA	SORADA		11 KV F-1 LATHIPADA	RURAL	OTHER							
101	TPSODL	BHANJANAGAR	BNED	SORADA	SORADA		11 KV F-2 SORADA TOW	URBAN	OTHER							
102	TPSODL	BHANJANAGAR	BNED	SORADA	SORADA		11 KV F-3 OLD BADAGA	RURAL	OTHER							
103	TPSODL	BHANJANAGAR	BNED	SORADA	SORADA		11 KV F-4 KAITHAGUDA	RURAL	OTHER							
104	TPSODL	BHANJANAGAR	BNED	BHANJANAGAR-II	KHETRIBARPUR(KB PUR)		11 KV F-1 KB PUR	RURAL	OTHER							
105	TPSODL	BHANJANAGAR	BNED	BHANJANAGAR-II	KHETRIBARPUR(KB PUR)		11 KV F-2 GOBARA-1	RURAL	OTHER							
106	TPSODL	BHANJANAGAR	BNED	BHANJANAGAR-II	KHETRIBARPUR(KB PUR)		11 KV F-3 GANGAPUR (I	RURAL	OTHER							
107	TPSODL	BHANJANAGAR	BNED	BHANJANAGAR-I	TILISING		11 KV F-1 TARASINGI	RURAL	OTHER							
108	TPSODL	BHANJANAGAR	BNED	BHANJANAGAR-I	TILISING		11 KV F-2 TILISING TOW	URBAN	OTHER							
109	TPSODL	BHANJANAGAR	BNED	BHANJANAGAR-I	TILISING		11 KV F-3 TURUMU	RURAL	OTHER							
110	TPSODL	BHANJANAGAR	BNED	BHANJANAGAR-I	GALLERY		11 KV F-1 GALLERY TOW	URBAN	OTHER							
111	TPSODL	BHANJANAGAR	BNED	BHANJANAGAR-I	GALLERY		11 KV F-2 BRAHAMANA	RURAL	OTHER							
112	TPSODL	BHANJANAGAR	BNED	BHANJANAGAR-I	GALLERY		11 KV F-3 BADANGI	RURAL	OTHER							
113	TPSODL	RAYAGADA	RED	RAYAGADA	SERIGUDA		11 KV F-1 TOWN FEEDE	URBAN	OTHER							
114	TPSODL	RAYAGADA	RED	RAYAGADA	SERIGUDA		11 KV F-2 TOWN FEEDE	URBAN	OTHER							
115	TPSODL	RAYAGADA	RED	RAYAGADA	SERIGUDA		11 KV F-3 MEDICAL	URBAN	OTHER							
116	TPSODL	RAYAGADA	RED	RAYAGADA	SERIGUDA		11 KV F-4 GUMMA	RURAL	OTHER							
117	TPSODL	RAYAGADA	RED	RAYAGADA	SERIGUDA		11 KV F-5 INDUSTRIAL	RURAL	OTHER							
118	TPSODL	RAYAGADA	RED	RAYAGADA	PIPALGUDA		11 KV F-1 KUNDAM	RURAL	OTHER							
119	TPSODL	RAYAGADA	RED	RAYAGADA	PIPALGUDA		11 KV F-2 KARUBAI/BIA	RURAL	OTHER							
120	TPSODL	RAYAGADA	RED	RAYAGADA	PIPALGUDA		11 KV F-3 MIRABALI	RURAL	OTHER							
121	TPSODL	RAYAGADA	RED	RAYAGADA	AUTO NAGAR		11 KV F-1 TOWN-3	URBAN	OTHER							
122	TPSODL	RAYAGADA	RED	RAYAGADA	AUTO NAGAR		11 KV F-2 JK PUR	RURAL	OTHER							
123	TPSODL	RAYAGADA	RED	RAYAGADA	AUTO NAGAR		11 KV F-3 TOWN-4	URBAN	OTHER							
124	TPSODL	RAYAGADA	RED	RAYAGADA	AUTO NAGAR		11 KV F-4 KERADA	RURAL	OTHER							
125	TPSODL	RAYAGADA	RED	RAYAGADA	AMLABHATA		KOLHANARA	RURAL	OTHER							
126	TPSODL	RAYAGADA	RED	RAYAGADA	AMLABHATA		J K PUR	RURAL	OTHER							
127	TPSODL	RAYAGADA	RED	RAYAGADA	AMLABHATA		PENTA	RURAL	OTHER							
128	TPSODL	RAYAGADA	RED	THERUBALI	SIKARPAI		SIKARPAI	RURAL	OTHER							
129	TPSODL	RAYAGADA	RED	THERUBALI	SIKARPAI		SERIGUMA	RURAL	OTHER							
130	TPSODL	RAYAGADA	RED	THERUBALI	SIKARPAI		ANTAMADA	RURAL	OTHER							
131	TPSODL	RAYAGADA	RED	THERUBALI	SIKARPAI		K.SINGPUR	RURAL	OTHER							
132	TPSODL	RAYAGADA	RED	THERUBALI	SIKARPAI		MAJHIGUDA	RURAL	OTHER							
133	TPSODL	RAYAGADA	RED	THERUBALI	KEUTAGUDA		REVOLKANA	RURAL	OTHER							
134	TPSODL	RAYAGADA	RED	THERUBALI	KEUTAGUDA		ANGURU	RURAL	OTHER							
135	TPSODL	RAYAGADA	RED	THERUBALI	KEUTAGUDA		DHUNDULI	RURAL	OTHER							
136	TPSODL	RAYAGADA	RED	RAYAGADA	MITS MEGA FOOD PARK		KOLNARA(CHARGED FR	RURAL	OTHER							
137	TPSODL	RAYAGADA	RED	RAYAGADA	MITS MEGA FOOD PARK		MITS (FOOD PARK)	RURAL	OTHER							
138	TPSODL	RAYAGADA	RED	RAYAGADA	PITA MAHAL		11kv F1 JAGANATHPUR	RURAL	OTHER							
139	TPSODL	RAYAGADA	RED	RAYAGADA	PITA MAHAL		11kv F2 INDUSTRIAL	RURAL	OTHER							
140	TPSODL	RAYAGADA	RED	RAYAGADA	PITA MAHAL		11kv F3 PITAMAHAL	RURAL	OTHER							
141	TPSODL	BERHAMPUR CITY	BED-I	MEDICAL	AMBAPUA	SEC09-F01	11 KV F-1 INCOME TAX	URBAN	OTHER	0.0343742						
142	TPSODL	BERHAMPUR CITY	BED-I	MEDICAL	AMBAPUA	SEC09-F02	11 KV F-3 AMBAPUA	URBAN	OTHER							
143	TPSODL	RAYAGADA	RED	BISSAM CUTTACK	HATA DAHIKHAL/JHILIGUDA		EXPRESS BACK	RURAL	OTHER							
144	TPSODL	RAYAGADA	RED	BISSAM CUTTACK	HATA DAHIKHAL/JHILIGUDA		STATION DAHIKHAL	RURAL	OTHER							
145	TPSODL	RAYAGADA	RED	BISSAM CUTTACK	CHANDRAPUR		BANDIRI	RURAL	OTHER							
146	TPSODL	RAYAGADA	RED	BISSAM CUTTACK	CHANDRAPUR		BANDIPANGA	RURAL	OTHER							
147	TPSODL	RAYAGADA	RED	BISSAM CUTTACK	CHANDRAPUR		CHANDRAPUR	RURAL	OTHER							
148	TPSODL	RAYAGADA	RED	BISSAM CUTTACK	CHANDRAPUR		JARAPA	RURAL	OTHER							
149	TPSODL	RAYAGADA	RED	RAYAGADA	PITA MAHAL		11kv F4 RAYAGADA BA(	RURAL	OTHER							
150	TPSODL	RAYAGADA	RED	RAYAGADA	JHIMIDIPETA		KEREDA	RURAL	OTHER							
151	TPSODL	RAYAGADA	RED	RAYAGADA	JHIMIDIPETA		JHIMIDIPETA	RURAL	OTHER							
152	TPSODL	RAYAGADA	RED	RAYAGADA	JHIMIDIPETA		CHAMPIKOTA	RURAL	OTHER							
153	TPSODL	RAYAGADA	RED	THERUBALI	THERUBALI		KOLNARA	RURAL	OTHER							
154	TPSODL	RAYAGADA	RED	THERUBALI	THERUBALI		THERUBALI	RURAL	OTHER							
155	TPSODL	RAYAGADA	RED	THERUBALI	THERUBALI		DP CAMP	RURAL	OTHER							
156	TPSODL	BERHAMPUR	PSED	POLSARA	CHIRIKIPADA/BADAPANKALABADI		11 KV F-1 DHUNKAPADA	RURAL	OTHER	4.436505						
157	TPSODL	BERHAMPUR	PSED	POLSARA	CHIRIKIPADA/BADAPANKALABADI		11 KV F-2 PANDRIPADA	RURAL	OTHER	1.68969						
158	TPSODL	BERHAMPUR	PSED	POLSARA	CHIRIKIPADA/BADAPANKALABADI		11 KV F-3 BHABARADA	RURAL	OTHER	4.04955						
159	TPSODL	BERHAMPUR	HED	HINJILIKATU	HINJILI		11 KV F-1 BURUPADA (C	URBAN	OTHER							
160	TPSODL	BERHAMPUR	HED	HINJILIKATU	HINJILI		11 KV F-2 PUTIAPADAR	RURAL	OTHER							
161	TPSODL	BERHAMPUR	HED	HINJILIKATU	HINJILI		11 KV F-3 SARU	RURAL	OTHER							
162	TPSODL	BERHAMPUR	HED	HINJILIKATU	HINJILI		11 KV F-4 BADAKHANDI	RURAL	OTHER							
163	TPSODL	BERHAMPUR	HED	HINJILIKATU	HINJILI		11 KV F-6 HINJILI TOWN	URBAN	OTHER							
164	TPSODL	BERHAMPUR	HED	HINJILIKATU	HINJILI		11 KV F-7 HINJILI	URBAN	OTHER							
165	TPSODL	BERHAMPUR	PSED	PURUSOTTAMPUR	TARATARINI		11 KV F-1 BHATAKUMA	RURAL	OTHER	3.625888						
166	TPSODL	BERHAMPUR	PSED	PURUSOTTAMPUR	TARATARINI		11 KV F-2 SUNATHARA	RURAL	OTHER	3.718498						
167	TPSODL	BERHAMPUR	PSED	PURUSOTTAMPUR	TARATARINI		11 KV F-3 SOLAGHARA	RURAL	OTHER	148.762012						
168	TPSODL	BERHAMPUR	PSED	PURUSOTTAMPUR	TARATARINI		11 KV F-4 RANAJHALI	RURAL	OTHER							
169	TPSODL	BERHAMPUR	PSED	PURUSOTTAMPUR	TARATARINI		11 KV F-5 JAMUNI	RURAL	OTHER	3.877468						
170	TPSODL	BERHAMPUR	PSED	PURUSOTTAMPUR	TARATARINI		11 KV F-6 TARA TARINI J	RURAL	OTHER							
171	TPSODL	ASKA	GSED	CHIKITI	JARADA		11 KV F-1 JARADA	RURAL	OTHER							
172	TPSODL	ASKA	GSED	CHIKITI	JARADA		11 KV F-2 TUMBA	RURAL	OTHER							
173	TPSODL	RAYAGADA	RED	BISSAM CUTTACK	MUNIGUDA		MUNIGUDA	RURAL	OTHER							
174	TPSODL	RAYAGADA	RED	BISSAM CUTTACK	MUNIGUDA		KUTURAGADA	RURAL	OTHER							
175	TPSODL	RAYAGADA	RED	BISSAM CUTTACK	MUNIGUDA		NEW HOPE	RURAL	OTHER							
176	TPSODL	RAYAGADA	RED	BISSAM CUTTACK	MUNIGUDA		BHAIRABAGADA	RURAL	OTHER							
177	TPSODL	RAYAGADA	RED	BISSAM CUTTACK	AMBADALA		11 KV F-3 DAHIKHAL BA	RURAL	OTHER							
178	TPSODL	RAYAGADA	RED	THERUBALI	KASIPUR		KASIPUR TOWN	URBAN	OTHER							
179	TPSODL	RAYAGADA	RED	THERUBALI	KASIPUR		GORAKHPUR	RURAL	OTHER							
180	TPSODL	RAYAGADA	RED	THERUBALI	KASIPUR		DANGASIL	RURAL	OTHER							
181	TPSODL	RAYAGADA	RED	THERUBALI	KASIPUR		SUNGER	RURAL	OTHER							

182	TPSODL	RAYAGADA	RED	THERUBALI	KASIPUR		CHANDRAGIRI	RURAL	OTHER							
183	TPSODL	RAYAGADA	RED	THERUBALI	SORISAPADAR		TIKRI TOWN/SORISHAP	URBAN	OTHER							
184	TPSODL	ASKA	AED-I	NUAGAON	NUAGAON		11 KV F-1 MUKUNDPUR	RURAL	OTHER							
185	TPSODL	ASKA	AED-I	NUAGAON	NUAGAON		11 KV F-2 NUAGAON	RURAL	OTHER							
186	TPSODL	ASKA	AED-I	NUAGAON	NUAGAON		11 KV F-3 BHETANAI	RURAL	OTHER							
187	TPSODL	ASKA	AED-I	NUAGAON	NUAGAON		11 KV F-4 COLLEGE SQU	RURAL	OTHER							
188	TPSODL	ASKA	AED-I	NUAGAON	NUAGAON		11 KV F-5 SUGAR FACTO	RURAL	OTHER							
189	TPSODL	ASKA	GSED	CHIKITI	SURANGI		11 KV F-1 MANDARADA	RURAL	OTHER							
190	TPSODL	ASKA	GSED	CHIKITI	SURANGI		11 KV F-2 TALAPADA	RURAL	OTHER							
191	TPSODL	ASKA	GSED	CHIKITI	SURANGI		11 KV F-3 RAJAPUR	RURAL	OTHER							
192	TPSODL	ASKA	GSED	CHIKITI	SURANGI		11 KV F-4 SURANGI	RURAL	OTHER							
193	TPSODL	RAYAGADA	RED	BISSAM CUTTACK	AMBADALA		11 KV F-2 AMBADALA T	URBAN	OTHER							
194	TPSODL	RAYAGADA	RED	BISSAM CUTTACK	AMBADALA		11 KV F-1 AMBADALA R	RURAL	OTHER							
195	TPSODL	RAYAGADA	RED	BISSAM CUTTACK	DANGA SARADA		HANUMANTAPUR	RURAL	OTHER							
196	TPSODL	RAYAGADA	RED	BISSAM CUTTACK	DANGA SARADA		BANGARADA	RURAL	OTHER							
197	TPSODL	RAYAGADA	RED	BISSAM CUTTACK	DANGA SARADA		DANGASORADA	RURAL	OTHER							
198	TPSODL	BHANJANAGAR	PED	BALIGUDA	BARAKHAMBA		11 KV F-3 SUDRA	RURAL	OTHER							
199	TPSODL	RAYAGADA	RED	THERUBALI	SORISAPADAR		TIKRI RURAL	RURAL	OTHER							
200	TPSODL	RAYAGADA	RED	THERUBALI	NUAPADA(RAYAGADA CIRCLE)		NUAPADA TOWN	URBAN	OTHER							
201	TPSODL	RAYAGADA	RED	THERUBALI	NUAPADA(RAYAGADA CIRCLE)		KUCHEIPADAR	RURAL	OTHER							
202	TPSODL	ASKA	GSED	DIGAPAHANDI	SIDESHWAR		11 KV F-1 KOTINADA	RURAL	OTHER							
203	TPSODL	ASKA	GSED	DIGAPAHANDI	SIDESHWAR		11 KV F-2 GANIANALA	RURAL	OTHER							
204	TPSODL	ASKA	AED-II	K.S.NAGAR	BUDHAMBA		11 KV F-1 GUDIAPALI	RURAL	OTHER							
205	TPSODL	ASKA	AED-II	K.S.NAGAR	BUDHAMBA		11 KV F-2 BADAMAHUR	RURAL	OTHER							
206	TPSODL	ASKA	AED-II	K.S.NAGAR	BUDHAMBA		11 KV F-3 BUDHAMBA	RURAL	OTHER							
207	TPSODL	ASKA	AED-II	K.S.NAGAR	BUDHAMBA		11 KV F-4 POLSARA RUR	RURAL	OTHER	4.184952						
208	TPSODL	ASKA	AED-II	K.S.NAGAR	BUDHAMBA		11 KV F-5 ATHAGADA P	RURAL	OTHER							
209	TPSODL	RAYAGADA	GED	GUNUPUR	GUNUPUR		GUNUPUR TOWN	URBAN	OTHER							
210	TPSODL	RAYAGADA	GED	GUNUPUR	GUNUPUR		COURT	URBAN	OTHER							
211	TPSODL	RAYAGADA	GED	GUNUPUR	GUNUPUR		KALMA	RURAL	OTHER							
212	TPSODL	RAYAGADA	GED	GUNUPUR	GUNUPUR		GADIAKHOLA	RURAL	OTHER							
213	TPSODL	RAYAGADA	GED	GUNUPUR	JALTAR		PUTASING	RURAL	OTHER							
214	TPSODL	RAYAGADA	GED	GUNUPUR	JALTAR		KULSING	RURAL	OTHER							
215	TPSODL	RAYAGADA	GED	GUNUPUR	JALTAR		JALTAR	RURAL	OTHER							
216	TPSODL	RAYAGADA	RED	THERUBALI	LOKAGUDA(K.SINGHPUR)		KRISHNAPATRAGUDA	RURAL	OTHER							
217	TPSODL	RAYAGADA	RED	THERUBALI	LOKAGUDA(K.SINGHPUR)		KALYAN SINGHPUR TOV	URBAN	OTHER							
218	TPSODL	RAYAGADA	RED	THERUBALI	LOKAGUDA(K.SINGHPUR)		SULIAPADAR	RURAL	OTHER							
219	TPSODL	RAYAGADA	RED	THERUBALI	LOKAGUDA(K.SINGHPUR)		HATIMUNDA	RURAL	OTHER							
220	TPSODL	RAYAGADA	RED	BISSAM CUTTACK	KUMAR DHAMUNI		KUMAR DHAMUNI	RURAL	OTHER							
221	TPSODL	RAYAGADA	RED	BISSAM CUTTACK	KUMAR DHAMUNI		DURGI	RURAL	OTHER							
222	TPSODL	ASKA	GSED	CHIKITI	PATRAPUR		11 KV F-1 PATRAPUR	RURAL	OTHER							
223	TPSODL	RAYAGADA	GED	GUNUPUR	BIKRAMPUR		BIKRAMPUR	RURAL	OTHER							
224	TPSODL	RAYAGADA	GED	GUNUPUR	BIKRAMPUR		JAGANATHPUR	RURAL	OTHER							
225	TPSODL	RAYAGADA	GED	GUNUPUR	BIKRAMPUR		PANASAGUDA	RURAL	OTHER							
226	TPSODL	RAYAGADA	GED	GUMUDA	GUMUDA		GUMUDA	RURAL	OTHER							
227	TPSODL	RAYAGADA	GED	GUMUDA	GUMUDA		RICE MILL (DEDICATED)	RURAL	OTHER							
228	TPSODL	RAYAGADA	GED	GUMUDA	GUMUDA		NAIRA	RURAL	OTHER							
229	TPSODL	RAYAGADA	RED	BISSAM CUTTACK	BISSAAM KATAK		BISSAM CUTTACK TOWI	URBAN	OTHER							
230	TPSODL	RAYAGADA	RED	BISSAM CUTTACK	BISSAAM KATAK		DAKULIGUDA-1	RURAL	OTHER							
231	TPSODL	RAYAGADA	RED	BISSAM CUTTACK	BISSAAM KATAK		BISSAM CUUTACK RURA	RURAL	OTHER							
232	TPSODL	RAYAGADA	RED	BISSAM CUTTACK	BISSAAM KATAK		CHATIKONA	RURAL	OTHER							
233	TPSODL	RAYAGADA	RED	BISSAM CUTTACK	HATA MUNIGUDA		HATA MUNIGUDA TOW	RURAL	OTHER							
234	TPSODL	RAYAGADA	RED	BISSAM CUTTACK	HATA MUNIGUDA		R K MISSION	RURAL	OTHER							
235	TPSODL	RAYAGADA	RED	BISSAM CUTTACK	HATA MUNIGUDA		DAKULUGUDA-2	RURAL	OTHER							
236	TPSODL	ASKA	GSED	CHIKITI	PATRAPUR		11 KV F-2 BADAPUR	RURAL	OTHER							
237	TPSODL	ASKA	GSED	CHIKITI	PATRAPUR		11 KV F-3 BOMKEI (PATI	RURAL	OTHER							
238	TPSODL	ASKA	GSED	CHIKITI	PATRAPUR		11 KV F-4 JAYANTIPUR	RURAL	OTHER							
239	TPSODL	ASKA	GSED	CHIKITI	PATRAPUR		11 KV F-5 KELUA	RURAL	OTHER							
240	TPSODL	RAYAGADA	GED	GUMUDA	UKKUMBA		KUJENDRI	URBAN	OTHER							
241	TPSODL	RAYAGADA	GED	GUMUDA	UKKUMBA		SUBHADRAPUR	RURAL	OTHER							
242	TPSODL	RAYAGADA	GED	GUMUDA	PADMAPUR		GUDIABANDHA	RURAL	OTHER							
243	TPSODL	RAYAGADA	GED	GUMUDA	PADMAPUR		PADMAPUR	RURAL	OTHER							
244	TPSODL	RAYAGADA	GED	GUMUDA	PADMAPUR		KENDUGUDA	RURAL	OTHER							
245	TPSODL	RAYAGADA	GED	GUMUDA	DAMBASARA		DAKASIKULA	RURAL	OTHER							
246	TPSODL	RAYAGADA	GED	GUMUDA	DAMBASARA		BAGHASALA	RURAL	OTHER							
247	TPSODL	RAYAGADA	GED	GUMUDA	DAMBASARA		GHANANTRI	RURAL	OTHER							
248	TPSODL	ASKA	AED-II	BUGUDA	BALIPADAR		11 KV F-1 BALIPADAR T	URBAN	OTHER							
249	TPSODL	ASKA	AED-II	BUGUDA	BALIPADAR		11 KV F-2 MANDAR	RURAL	OTHER							
250	TPSODL	ASKA	AED-II	BUGUDA	BALIPADAR		11 KV F-3 A. KARADABA	RURAL	OTHER							
251	TPSODL	ASKA	AED-II	BUGUDA	BALIPADAR		11 KV F-4 GAHANGU	RURAL	OTHER							
252	TPSODL	ASKA	GSED	DIGAPAHANDI	BHISMAGIRI		11 KV F-2 BHISMAGIRI (	RURAL	OTHER							
253	TPSODL	RAYAGADA	PKED	PARALAKHEMUNDI	PARALAKHEMUNDI OLD(URBAN)		TOWN-1 FEEDER	URBAN	OTHER							
254	TPSODL	RAYAGADA	PKED	PARALAKHEMUNDI	PARALAKHEMUNDI OLD(URBAN)		TOWN-3 FEEDER	URBAN	OTHER							
255	TPSODL	RAYAGADA	PKED	PARALAKHEMUNDI	PARALAKHEMUNDI OLD(URBAN)		TOWN-2 FEEDER	URBAN	OTHER							
256	TPSODL	RAYAGADA	PKED	KASINAGAR	PARALAKHEMUNDI OLD(URBAN)		RURAL FEEDER	RURAL	OTHER							
257	TPSODL	RAYAGADA	PKED	KASINAGAR	PARALAKHEMUNDI OLD(URBAN)		SP OFICE FEEDER	URBAN	OTHER							
258	TPSODL	RAYAGADA	PKED	KASINAGAR	KASINAGAR		KASINAGAR TOWN-1	URBAN	OTHER							
259	TPSODL	RAYAGADA	PKED	KASINAGAR	KASINAGAR		KIDIGAON	URBAN	OTHER							
260	TPSODL	RAYAGADA	PKED	KASINAGAR	KASINAGAR		KASINAGAR TOWN-2	URBAN	OTHER							
261	TPSODL	RAYAGADA	PKED	KASINAGAR	KASINAGAR		BOTHABA	RURAL	OTHER							
262	TPSODL	RAYAGADA	GED	GUMUDA	KAILASHPUR		MUKUNDAPUR	RURAL	OTHER							
263	TPSODL	RAYAGADA	GED	GUMUDA	KAILASHPUR		BHOIMADA	RURAL	OTHER							
264	TPSODL	RAYAGADA	GED	GUMUDA	KAILASHPUR		LALBI	RURAL	OTHER							
265	TPSODL	RAYAGADA	GED	GUMUDA	RAMANAGUDA		RAMANAGUDA	RURAL	OTHER							
266	TPSODL	RAYAGADA	GED	GUMUDA	RAMANAGUDA		PALUPAI	RURAL	OTHER							
267	TPSODL	BERHAMPUR	PSED	PURUSOTTAMPUR	PRATAPPUR		11 KV F-1 BARAGAON	RURAL	OTHER	5.31591						
268	TPSODL	BERHAMPUR	PSED	PURUSOTTAMPUR	PRATAPPUR		11 KV F-2 BN PUR	RURAL	OTHER							
269	TPSODL	BERHAMPUR	PSED	PURUSOTTAMPUR	PRATAPPUR		11 KV F-3 BALIA	RURAL	OTHER							
270	TPSODL	BERHAMPUR	PSED	PURUSOTTAMPUR	PRATAPPUR		11 KV F-4 ACHULI	RURAL	OTHER							
271	TPSODL	BHANJANAGAR	BOED	BOUDH	CHARICHAKA		11 KV F-1 PURUNA KAT	RURAL	OTHER							
272	TPSODL	BHANJANAGAR	BOED	BOUDH	CHARICHAKA		11 KV F-2 CHARICHAKA	RURAL	OTHER							
273	TPSODL	BHANJANAGAR	BOED	BOUDH	CHARICHAKA		11 KV F-3 KARANJAKAT	RURAL	OTHER							
274	TPSODL	BHANJANAGAR	BOED	BOUDH	CHARICHAKA		11 KV F-4 ADENIGADA	RURAL	OTHER							
275	TPSODL	BHANJANAGAR	BOED	MANMUNDA	KANTAMAL		11 KV F-1 SULIA	RURAL	OTHER							

276	TPSODL	BERHAMPUR	HED	HINJILIKATU	PODINGI / PITALA		11 KV F-1 BURUPADA (N	RURAL	OTHER							
277	TPSODL	BERHAMPUR	HED	HINJILIKATU	PODINGI / PITALA		11 KV F-2 PITALA	RURAL	OTHER							
278	TPSODL	BHANJANAGAR	BNED	BELAGUNTHA	BD PUR		11 KV F-4 PATADHARA	RURAL	OTHER							
279	TPSODL	BHANJANAGAR	BNED	BHANJANAGAR-II	KANTEIPALLY/GOVINDPUR		11 KV F-1 NETTENGA	RURAL	OTHER							
280	TPSODL	BHANJANAGAR	BNED	BHANJANAGAR-II	KANTEIPALLY/GOVINDPUR		11 KV F-2 GOBARA	RURAL	OTHER							
281	TPSODL	BHANJANAGAR	BNED	BHANJANAGAR-II	KANTEIPALLY/GOVINDPUR		11 KV F-3 KULANGI	RURAL	OTHER							
282	TPSODL	BHANJANAGAR	BNED	BHANJANAGAR-II	KANTEIPALLY/GOVINDPUR		11 KV F-4 JILLUNDI	RURAL	OTHER							
283	TPSODL	BHANJANAGAR	BOED	MANMUNDA	KANTAMAL		11 KV F-1 KANTAMAL	RURAL	OTHER							
284	TPSODL	BHANJANAGAR	BOED	MANMUNDA	KANTAMAL		11 KV F-3 UDAYPUR	RURAL	OTHER							
285	TPSODL	BHANJANAGAR	BOED	MANMUNDA	KANTAMAL		11 KV F-4 KANTAMAL M	RURAL	OTHER							
286	TPSODL	BHANJANAGAR	BOED	BOUDH	RAMBHIKATA		11 KV F-1 BN PUR	RURAL	OTHER							
287	TPSODL	BHANJANAGAR	BOED	BOUDH	RAMBHIKATA		11 KV F-2 LUNIBAHAL	RURAL	OTHER							
288	TPSODL	BHANJANAGAR	BOED	BOUDH	RAMBHIKATA		11 KV F-3 TILESWAR	RURAL	OTHER							
289	TPSODL	BERHAMPUR	HED	SHERAGADA	MARUDI JAGANNATHPUR		11 KV F-1 PURNANDA	RURAL	OTHER							
290	TPSODL	BERHAMPUR	HED	SHERAGADA	MARUDI JAGANNATHPUR		11 KV F-2 GOVINDAPUR	RURAL	OTHER							
291	TPSODL	BERHAMPUR	HED	SHERAGADA	ADAPADA/ KONKARADA		11 KV F-1 ADAPADA	RURAL	OTHER							
292	TPSODL	BERHAMPUR	HED	SHERAGADA	ADAPADA/ KONKARADA		11 KV F-4 KURULA	RURAL	OTHER							
293	TPSODL	BERHAMPUR	HED	SHERAGADA	ADAPADA/ KONKARADA		11 KV F-2 KHALINGI	RURAL	OTHER							
294	TPSODL	BERHAMPUR	HED	SHERAGADA	ADAPADA/ KONKARADA		11 KV F-3 KONKARADA	RURAL	OTHER							
295	TPSODL	BERHAMPUR	HED	SHERAGADA	SHERAGADA		11 KV F-1 SHERAGADA T	URBAN	OTHER	6.781468						
296	TPSODL	BERHAMPUR	HED	SHERAGADA	SHERAGADA		11 KV F-2 KARADAKANA	RURAL	OTHER	0.257666						
297	TPSODL	BERHAMPUR	HED	SHERAGADA	SHERAGADA		11 KV F-3 DHABALPUR	RURAL	OTHER	6.195986						
298	TPSODL	BERHAMPUR	HED	SHERAGADA	SHERAGADA		11 KV F-4 ASKA (SHERA	RURAL	OTHER	4.47993						
299	TPSODL	BERHAMPUR	HED	SHERAGADA	PALASPUR		11 KV F-1 JURA	RURAL	OTHER							
300	TPSODL	BERHAMPUR	HED	SHERAGADA	PALASPUR		11 KV F-3 PATAPUR	RURAL	OTHER							
301	TPSODL	BERHAMPUR	HED	SHERAGADA	K.KARADAKANA		11 KV F-1 MANIKAPUR (	RURAL	OTHER							
302	TPSODL	BERHAMPUR	HED	SHERAGADA	K.KARADAKANA		11 KV F-2 BANDHAGUD	RURAL	OTHER							
303	TPSODL	BERHAMPUR CITY	BED-I	MEDICAL	BIDYUTPURI	SEC07-F01	11 KV F-1 NILANCHAL N	URBAN	OTHER							
304	TPSODL	BERHAMPUR CITY	BED-I	MEDICAL	BIDYUTPURI	SEC07-F02	11 KV F-2 KHODA SINGH	URBAN	OTHER							
305	TPSODL	BERHAMPUR CITY	BED-I	MEDICAL	BIDYUTPURI	SEC07-F03	11 KV F-4 AYODHYA NA	URBAN	OTHER							
306	TPSODL	BERHAMPUR CITY	BED-I	INDUSTRIAL	ANKULI	SEC06-F01	11 KV F-1 ANKULI	URBAN	OTHER							
307	TPSODL	BERHAMPUR	HED	HINJILIKATU	SASAN AMBAGAON		11 KV F-1 DARUBHADRA	RURAL	OTHER	3.805575						
308	TPSODL	BERHAMPUR	HED	HINJILIKATU	SASAN AMBAGAON		11 KV F-2 PUTIAPADAR	RURAL	OTHER	6.096345						
309	TPSODL	BERHAMPUR	HED	HINJILIKATU	GANDALA		11 KV F-1 GANDALA	RURAL	OTHER	4.4088						
310	TPSODL	BERHAMPUR	HED	HINJILIKATU	GANDALA		11 KV F-2 BHABANDHA	RURAL	OTHER	4.133444						
311	TPSODL	BERHAMPUR	HED	HINJILIKATU	GANDALA		11 KV F-3 DHOBADI PAT	RURAL	OTHER	1.56251						
312	TPSODL	BERHAMPUR CITY	BED-II	SDO-1	AMBAGADA	SEC12-F02	11 KV F-1 OLD BERHAM	URBAN	OTHER	0.3133284						
313	TPSODL	BERHAMPUR CITY	BED-II	SDO-1	AMBAGADA	SEC12-F04	11 KV F-2 ASKA ROAD P	URBAN	OTHER							
314	TPSODL	BERHAMPUR CITY	BED-II	SDO-1	AMBAGADA	SEC12-F01	11 KV F-3 ASKA ROAD	URBAN	OTHER							
315	TPSODL	BERHAMPUR CITY	BED-II	SDO-1	AMBAGADA	SEC12-F03	11 KV F-4 CITY HOSPITA	URBAN	OTHER	0.0218284						
316	TPSODL	BERHAMPUR CITY	BED-III	SD0-4	AMBAGADA	SEC12F06	11 KV F-5 WATER WORI	RURAL	OTHER	0.0082882						
317	TPSODL	BERHAMPUR CITY	BED-II	SDO-1	AMBAGADA	SEC12-F05	11 KV F-6 AUTO NAGAR	URBAN	OTHER	3.203604						
318	TPSODL	BERHAMPUR CITY	BED-III	SD0-4	AMBAGADA	SEC12F07	11 KV F-7 BALIPADA	URBAN	OTHER	0.0604552						
319	TPSODL	BERHAMPUR	GNED	KHALLIKOTE	ODIALPUR		11 KV F-2 ODIALPUR-KE	RURAL	OTHER							
320	TPSODL	BERHAMPUR	GNED	KHALLIKOTE	ODIALPUR		11 KV F-3 SWOSTI	RURAL	OTHER							
321	TPSODL	ASKA	AED-II	K.S.NAGAR	KS NAGAR		11 KV F-1 PATHARA	RURAL	OTHER							
322	TPSODL	ASKA	AED-II	K.S.NAGAR	KS NAGAR		11 KV F-2 K.S. NAGAR T	URBAN	OTHER							
323	TPSODL	ASKA	AED-II	K.S.NAGAR	KS NAGAR		11 KV F-3 SIALAI	RURAL	OTHER							
324	TPSODL	ASKA	AED-II	K.S.NAGAR	KS NAGAR		11 KV F-4 GUDIALI	RURAL	OTHER							
325	TPSODL	ASKA	AED-II	K.S.NAGAR	KS NAGAR		11 KV F-5 BARIDA (BOLG	RURAL	OTHER							
326	TPSODL	BERHAMPUR CITY	BED-II	SDO-1	LUCHAPADA	SEC11-F01	11 KV F-1 BRAJA NAGAR	URBAN	OTHER							
327	TPSODL	BERHAMPUR CITY	BED-II	SDO-1	LUCHAPADA	SEC11-F02	11 KV F-2 TULSI NAGAR	URBAN	OTHER							
328	TPSODL	BERHAMPUR CITY	BED-II	SDO-1	LUCHAPADA	SEC11-F03	11 KV F-3 GATE BAZAR	URBAN	OTHER							
329	TPSODL	BERHAMPUR CITY	BED-I	INDUSTRIAL	LUCHAPADA	SEC11-F04	11 KV F-1-4 CITY HOSPI	URBAN	OTHER							
330	TPSODL	BERHAMPUR CITY	BED-II	SDO-1	CORPORATION ROAD	SEC13-F02	11 KV F-1 DALUASAHI	URBAN	OTHER							
331	TPSODL	BERHAMPUR CITY	BED-II	SDO-1	CORPORATION ROAD	SEC13-F03	11 KV F-2 SRIRAM NAGA	URBAN	OTHER	0.7914						
332	TPSODL	BERHAMPUR CITY	BED-II	SDO-3	CORPORATION ROAD	SEC13-F04	11 KV F-3 SANA BAZAR	URBAN	OTHER	9.28434						
333	TPSODL	BERHAMPUR CITY	BED-II	SDO-1	CORPORATION ROAD	SEC13-F01	11 KV F-4 UB ROAD	URBAN	OTHER	5.067						
334	TPSODL	BERHAMPUR CITY	BED-III	SD0-4	NIMAKHANDI	SEC20F01	11 KV F-1 GURUNTHI	RURAL	OTHER	5.033						
335	TPSODL	BERHAMPUR CITY	BED-III	SD0-4	NIMAKHANDI	SEC20F02	11 KV F-2 BORIGAON	RURAL	OTHER	1.66116						
336	TPSODL	BERHAMPUR CITY	BED-III	SD0-4	NIMAKHANDI	SEC20F03	11 KV F-3 LOCHAPADA	URBAN	OTHER	10.55106						
337	TPSODL	BERHAMPUR CITY	BED-III	SD0-4	NIMAKHANDI	SEC20F04	11 KV F-4 NIMAKHANDI	RURAL	OTHER	5.6916						
338	TPSODL	BERHAMPUR CITY	BED-III	SD0-4	KUKUDAKHANDI	SEC18F02	11 KV F-1 INDUSTRIAL	URBAN	OTHER							
339	TPSODL	BERHAMPUR CITY	BED-III	SD0-4	KUKUDAKHANDI	SEC18F03	11 KV F-2 BOULAJHOLI	RURAL	OTHER	17.06908						
340	TPSODL	BERHAMPUR CITY	BED-III	SD0-4	KUKUDAKHANDI	SEC18F04	11 KV F-3 ANKUSHPUR	URBAN	OTHER							
341	TPSODL	ASKA	AED-II	BUGUDA	BUGUDA		11 KV F-1 MOTABADI	RURAL	OTHER							
342	TPSODL	ASKA	AED-II	BUGUDA	BUGUDA		11 KV F-2 KARCHULLI	RURAL	OTHER							
343	TPSODL	ASKA	AED-II	BUGUDA	BUGUDA		11 KV F-3 BUGUDA TOW	URBAN	OTHER							
344	TPSODL	ASKA	AED-II	BUGUDA	BUGUDA		11 KV F-4 GOLIA	RURAL	OTHER							
345	TPSODL	ASKA	AED-II	BUGUDA	BUGUDA		11 KV F-5 PANGIDI	RURAL	OTHER							
346	TPSODL	ASKA	GSED	DIGAPAHANDI	DEKHALI		11 KV F-1 BOMKEI (DEK	RURAL	OTHER							
347	TPSODL	ASKA	GSED	DIGAPAHANDI	DEKHALI		11 KV F-2 JAKAR DUMU	RURAL	OTHER							
348	TPSODL	BERHAMPUR CITY	BED-III	SD0-4	KUKUDAKHANDI		11 KV F-4 KUKUDAKHAN	RURAL	OTHER							
349	TPSODL	BERHAMPUR CITY	BED-III	SD0-4	LATHI	SEC19F01	11 KV F-1 LATHI	RURAL	OTHER	3.915772						
350	TPSODL	BERHAMPUR CITY	BED-III	SD0-4	LATHI	SEC19F02	11 KV F-2 MAHUDA	RURAL	OTHER	9.451188						
351	TPSODL	BERHAMPUR CITY	BED-III	SD0-4	LATHI	SEC19F03	11 KV F-3 SUKUNDA	RURAL	OTHER	3.442564						
352	TPSODL	BHANJANAGAR	PED	G.UDAYGIRI	G UDAYGIRI		11 KV F-1 GRESINGIA	RURAL	OTHER							
353	TPSODL	BHANJANAGAR	PED	G.UDAYGIRI	G UDAYGIRI		11 KV F-2 G. UDAYAGIR	URBAN	OTHER							
354	TPSODL	BHANJANAGAR	PED	G.UDAYGIRI	G UDAYGIRI		11 KV F-3 G. UDAYAGIR	URBAN	OTHER							
355	TPSODL	BHANJANAGAR	PED	G.UDAYGIRI	G UDAYGIRI		11 KV F-4 MALIKAPADA	RURAL	OTHER							
356	TPSODL	BHANJANAGAR	PED	G.UDAYGIRI	G UDAYGIRI		11 KV F-5 LINGAGADA	RURAL	OTHER							
357	TPSODL	BHANJANAGAR	PED	G.UDAYGIRI	KALINGA		11 KV F-1 MICROWAVE	RURAL	OTHER							
358	TPSODL	BHANJANAGAR	PED	G.UDAYGIRI	KALINGA		11 KV F-2 DUNGI	RURAL	OTHER							
359	TPSODL	BHANJANAGAR	PED	G.UDAYGIRI	KALINGA		11 KV F-3 NANDAGIRI	RURAL	OTHER							
360	TPSODL	BERHAMPUR CITY	BED-III	KANISHI	KANISHI	SEC16F01	11 KV F-1 HALDIAPADA(	URBAN	OTHER							
361	TPSODL	BERHAMPUR CITY	BED-III	KANISHI	KANISHI	SEC16F03	11 KV F-2 RANDHA	RURAL	OTHER							
362	TPSODL	BERHAMPUR CITY	BED-III	KANISHI	KANISHI	SEC16F02	11 KV F-3 TULLU	RURAL	OTHER							
363	TPSODL	BERHAMPUR CITY	BED-III	KANISHI	MANTRIDI	SEC17F01	11 KV F-1 MANTRIDI TO	URBAN	OTHER							
364	TPSODL	BERHAMPUR CITY	BED-III	KANISHI	MANTRIDI	SEC17F02	11 KV F-2 SASANPADAR	RURAL	OTHER							
365	TPSODL	BERHAMPUR CITY	BED-III	KANISHI	MANTRIDI	SEC17F03	11 KV F-3 BHAIRABI	RURAL	OTHER							
366	TPSODL	BERHAMPUR CITY	BED-III	KANISHI	MANTRIDI	SEC17F04	11 KV F-4 NIST	URBAN	OTHER							
367	TPSODL	ASKA	AED-I	ASKA	DHARAKOTE		11 KV F-1 RUGUMU	RURAL	OTHER							
368	TPSODL	BHANJANAGAR	PED	PHULBANI	KHAJURIPADA		11 KV F-1 DUTIPADA	RURAL	OTHER							
369	TPSODL	BHANJANAGAR	PED	PHULBANI	KHAJURIPADA		11 KV F-2 ARAPAJU	RURAL	OTHER							

370	TPSODL	BHANJANAGAR	PED	PHULBANI	KHAJURIPADA		11 KV F-3 KHAJURIPADA	URBAN	OTHER							
371	TPSODL	BHANJANAGAR	PED	PHULBANI	KHAJURIPADA		11 KV F-4 R. NUAGAON	RURAL	OTHER							
372	TPSODL	BHANJANAGAR	PED	PHULBANI	PHIRINGIA		11 KV F-1 TELLAPALLI	RURAL	OTHER							
373	TPSODL	BHANJANAGAR	PED	PHULBANI	PHIRINGIA		11 KV F-2 MAJHIPADA	RURAL	OTHER							
374	TPSODL	BERHAMPUR CITY	BED-III	KANISHI	JAGAPUR	SEC15F01	11 KV F-1 GOLANTHARA	RURAL	OTHER	0.92691						
375	TPSODL	BERHAMPUR CITY	BED-III	KANISHI	JAGAPUR	SEC15F02	11 KV F-2 SOROALA	RURAL	OTHER							
376	TPSODL	BERHAMPUR CITY	BED-III	KANISHI	JAGAPUR	SEC15F03	11 KV F-3 SUMANDI	RURAL	OTHER							
377	TPSODL	ASKA	AED-I	ASKA	DHARAKOTE		11 KV F-2 BAHARPUR	RURAL	OTHER							
378	TPSODL	ASKA	AED-I	ASKA	DHARAKOTE		11 KV F-3 BLOCK	URBAN	OTHER							
379	TPSODL	ASKA	AED-I	ASKA	DHARAKOTE		11 KV F-5 MUNDAMARI	RURAL	OTHER							
380	TPSODL	ASKA	AED-I	ASKA	KHARIGUMA		11 KV F-1 NUAGADA (KI	RURAL	OTHER							
381	TPSODL	ASKA	AED-I	ASKA	KHARIGUMA		11 KV F-2 BARADABILI	RURAL	OTHER							
382	TPSODL	BHANJANAGAR	PED	PHULBANI	PHIRINGIA		11 KV F-3 KELAPADA	RURAL	OTHER							
383	TPSODL	BHANJANAGAR	PED	PHULBANI	PHIRINGIA		11 KV F-4 BANDHAGAD	RURAL	OTHER							
384	TPSODL	BERHAMPUR	GNED	CHATRAPUR	CHATRAPUR		11 KV F-1 CHATRAPUR F	RURAL	OTHER							
385	TPSODL	BERHAMPUR	GNED	CHATRAPUR	CHATRAPUR		11 KV F-2 LOWER BUS S	RURAL	OTHER							
386	TPSODL	BERHAMPUR	GNED	CHATRAPUR	CHATRAPUR		11 KV F-3 UPPER BUS ST	URBAN	OTHER							
387	TPSODL	BERHAMPUR	GNED	CHATRAPUR	CHATRAPUR		11 KV F-4 DRDA	URBAN	OTHER							
388	TPSODL	BERHAMPUR	GNED	CHATRAPUR	CHATRAPUR		11 KV F-5 PORT	RURAL	OTHER							
389	TPSODL	BERHAMPUR	GNED	CHATRAPUR	CHATRAPUR		11 KV F-6 AGASTI NUAG	URBAN	OTHER							
390	TPSODL	ASKA	GSED	CHIKITI	PITATALI		11 KV F-1 PITATALI RUR	RURAL	OTHER							
391	TPSODL	ASKA	GSED	CHIKITI	PITATALI		11 KV F-2 KRUSHNA NA	RURAL	OTHER							
392	TPSODL	ASKA	GSED	CHIKITI	PITATALI		11 KV F-3 RAMPA BARID	RURAL	OTHER							
393	TPSODL	BHANJANAGAR	PED	G.UDAYGIRI	RAIKIA		11 KV F-1 RAIKIA TOWN	URBAN	OTHER							
394	TPSODL	BHANJANAGAR	PED	G.UDAYGIRI	RAIKIA		11 KV F-2 MANDAKIA	RURAL	OTHER							
395	TPSODL	BHANJANAGAR	PED	G.UDAYGIRI	RAIKIA		11 KV F-3 MANIKESWAR	RURAL	OTHER							
396	TPSODL	BHANJANAGAR	PED	G.UDAYGIRI	RAIKIA		11 KV F-4 MANDASARA	RURAL	OTHER							
397	TPSODL	BHANJANAGAR	PED	G.UDAYGIRI	RAIKIA		11 KV F-5 GUNJIBADI	RURAL	OTHER							
398	TPSODL	BERHAMPUR	GNED	CHATRAPUR	RAMACHANDRAPUR		11 KV F-1 BHIKARIPALLI	RURAL	OTHER							
399	TPSODL	BERHAMPUR	GNED	CHATRAPUR	RAMACHANDRAPUR		11 KV F-2 MATIKHALA	RURAL	OTHER							
400	TPSODL	BERHAMPUR	GNED	CHATRAPUR	RAMACHANDRAPUR		11 KV F-3 MAYAPATNA	RURAL	OTHER							
401	TPSODL	BERHAMPUR	GNED	CHATRAPUR	RAMACHANDRAPUR		11 KV F-4 CHAMAKHAN	RURAL	OTHER	1.049042						
402	TPSODL	BERHAMPUR	GNED	CHATRAPUR	BAULGAON		11 KV F-1 KARATALI	RURAL	OTHER							
403	TPSODL	BERHAMPUR	GNED	CHATRAPUR	BAULGAON		11 KV F-2 DIBYASINGPU	RURAL	OTHER							
404	TPSODL	BERHAMPUR	GNED	CHATRAPUR	BAULGAON		11 KV F-3 BAULAGAON	RURAL	OTHER	2.000715						
405	TPSODL	BERHAMPUR	GNED	CHATRAPUR	BAULGAON		11 KV F-4 BADAMADHA	RURAL	OTHER							
406	TPSODL	ASKA	GSED	CHIKITI	NUAPADA(ASKA CIRCLE)		11 KV F-1 CHANDAPUR	RURAL	OTHER							
407	TPSODL	ASKA	GSED	CHIKITI	NUAPADA(ASKA CIRCLE)		11 KV F-2 NUAPADA	RURAL	OTHER							
408	TPSODL	ASKA	GSED	CHIKITI	NUAPADA(ASKA CIRCLE)		11 KV F-3 KHARIGUDA	RURAL	OTHER							
409	TPSODL	BHANJANAGAR	PED	PHULBANI	DAHAPADAR		11 KV F-1 BISIPADA	RURAL	OTHER							
410	TPSODL	BHANJANAGAR	PED	PHULBANI	DAHAPADAR		11 KV F-2 ADASIPADA	RURAL	OTHER							
411	TPSODL	BHANJANAGAR	PED	PHULBANI	DAHAPADAR		11 KV F-3 RUJANGI	RURAL	OTHER							
412	TPSODL	BHANJANAGAR	PED	PHULBANI	DAHAPADAR		11 KV F-4 GUMAGADA	RURAL	OTHER							
413	TPSODL	BHANJANAGAR	PED	G.UDAYGIRI	KARADA		11 KV F-1 KARADA	RURAL	OTHER							
414	TPSODL	BHANJANAGAR	PED	G.UDAYGIRI	KARADA		11 KV F-2 ASURABANDH	RURAL	OTHER							
415	TPSODL	BHANJANAGAR	PED	G.UDAYGIRI	KARADA		11 KV F-3 BARABA	RURAL	OTHER							
416	TPSODL	BERHAMPUR CITY	BED-I	MEDICAL	MEDICAL	SEC08-F01	11 KV F-1 SIDHARTH NA	URBAN	OTHER							
417	TPSODL	BERHAMPUR CITY	BED-I	MEDICAL	MEDICAL	SEC08-F02	11 KV F-2 MEDICAL	URBAN	OTHER	0.07654						
418	TPSODL	BERHAMPUR CITY	BED-I	MEDICAL	MEDICAL		11 KV F-3 AMABPUA	URBAN	OTHER	1.179984						
419	TPSODL	BERHAMPUR CITY	BED-I	MEDICAL	MEDICAL	SEC08-F04	11 KV F-4 COURTPETA	URBAN	OTHER							
420	TPSODL	BERHAMPUR CITY	BED-I	MEDICAL	MEDICAL	SEC08-F05	11 KV F-5 KAMAPALLI	URBAN	OTHER	4.645584						
421	TPSODL	BERHAMPUR CITY	BED-I	MEDICAL	MEDICAL	SEC08-F06	11 KV F-6 TATA BENZ	URBAN	OTHER	2.39618						
422	TPSODL	BERHAMPUR CITY	BED-I	MEDICAL	MEDICAL	SEC08-F07	11 KV F-7 OLD BUS STAI	URBAN	OTHER	2.60282						
423	TPSODL	BERHAMPUR CITY	BED-I	MEDICAL	MEDICAL	SEC08-F08	11 KV F-8 CITY HOSPITA	URBAN	OTHER	2.905824						
424	TPSODL	BHANJANAGAR	PED	G.UDAYGIRI	GUTINGIA		11 KV F-1 ARGADI	RURAL	OTHER							
425	TPSODL	BHANJANAGAR	PED	G.UDAYGIRI	GUTINGIA		11 KV F-2 PABURIA	RURAL	OTHER							
426	TPSODL	BHANJANAGAR	PED	G.UDAYGIRI	GUTINGIA		11 KV F-3 PADANGI	RURAL	OTHER							
427	TPSODL	BHANJANAGAR	PED	G.UDAYGIRI	GUTINGIA		11 KV F-4 GUTINGIA	RURAL	OTHER							
428	TPSODL	BERHAMPUR	GNED	RAMBHA	RAMBHA		11 KV F-1 RAMBHA VILL	RURAL	OTHER	3.71064						
429	TPSODL	BERHAMPUR	GNED	RAMBHA	RAMBHA		11 KV F-2 MILL	RURAL	OTHER	8.91328						
430	TPSODL	BERHAMPUR	GNED	RAMBHA	SAKIRI		11 KV F-1 SANAGHATI	RURAL	OTHER	2.405445						
431	TPSODL	BERHAMPUR	GNED	RAMBHA	SAKIRI		11 KV F-2 KANAKA	RURAL	OTHER	1.62663						
432	TPSODL	BHANJANAGAR	BOED	MANMUNDA	JANAPANKA		11 KV F-1 JANAPANKA	RURAL	OTHER							
433	TPSODL	BHANJANAGAR	BOED	MANMUNDA	JANAPANKA		11 KV F-2 TELIBANDH	RURAL	OTHER							
434	TPSODL	BHANJANAGAR	BOED	MANMUNDA	JANAPANKA		11 KV F-3 KAMALPUR	RURAL	OTHER							
435	TPSODL	BHANJANAGAR	BOED	BOUDH	CHATRANGA		11 KV F-1 KUSANGA	RURAL	OTHER							
436	TPSODL	BHANJANAGAR	BOED	BOUDH	CHATRANGA		11 KV F-2 TALAGAON	RURAL	OTHER							
437	TPSODL	BERHAMPUR CITY	BED-I	MEDICAL	NEW MEDICAL(MKCG)	SEC10-F01	11 KV F-1 PHD	URBAN	OTHER							
438	TPSODL	BERHAMPUR CITY	BED-I	GOPALPUR	UNIVERSITY/BHANJAVIHAR	SEC03F01	11 KV F-1 KALIPALLI	RURAL	OTHER	4.450512						
439	TPSODL	BERHAMPUR CITY	BED-I	GOPALPUR	UNIVERSITY/BHANJAVIHAR	SEC03F02	11 KV F-2 GOPALPUR	URBAN	OTHER	4.450512						
440	TPSODL	BERHAMPUR CITY	BED-I	GOPALPUR	UNIVERSITY/BHANJAVIHAR	SEC03F03	11 KV F-3 UNIVERSITY	RURAL	OTHER	3.231174						
441	TPSODL	BERHAMPUR CITY	BED-I	GOPALPUR	UNIVERSITY/BHANJAVIHAR	SEC03F04	11 KV F-4 GOLABANDHA	RURAL	OTHER							
442	TPSODL	BERHAMPUR CITY	BED-I	GOPALPUR	UNIVERSITY/BHANJAVIHAR	SEC03F05	11 KV F-5 KARAPALLI	RURAL	OTHER	7.738954						
443	TPSODL	BHANJANAGAR	PED	G.UDAYGIRI	TIKABALI		11 KV F-1 TIKABALI	RURAL	OTHER							
444	TPSODL	BHANJANAGAR	PED	G.UDAYGIRI	TIKABALI		11 KV F-2 KAINJHAR	RURAL	OTHER							
445	TPSODL	BHANJANAGAR	PED	G.UDAYGIRI	TIKABALI		11 KV F-3 BEHERAGAON	RURAL	OTHER							
446	TPSODL	BHANJANAGAR	PED	G.UDAYGIRI	CHAKAPADA		11 KV F-1 BRAHMANAP	RURAL	OTHER							
447	TPSODL	BHANJANAGAR	PED	G.UDAYGIRI	CHAKAPADA		11 KV F-2 CHAKAPADA	RURAL	OTHER							
448	TPSODL	BHANJANAGAR	PED	G.UDAYGIRI	CHAKAPADA		11 KV F-3 CHAHALI	RURAL	OTHER							
449	TPSODL	BERHAMPUR	GNED	RAMBHA	SAKIRI		11 KV F-3 CHIKILI-BANIA	RURAL	OTHER	5.37414						
450	TPSODL	BERHAMPUR	GNED	RAMBHA	TITIPA		11 KV F-1 NUAPADA	RURAL	OTHER	5.771436						
451	TPSODL	BERHAMPUR	GNED	RAMBHA	TITIPA		11 KV F-2 TICHANA	RURAL	OTHER							
452	TPSODL	BERHAMPUR	GNED	RAMBHA	TITIPA		11 KV F-3 NUAGAON	RURAL	OTHER							
453	TPSODL	BERHAMPUR	GNED	RAMBHA	TITIPA		11 KV F-4 M. BERHAMP	RURAL	OTHER	1.95558						
454	TPSODL	BERHAMPUR	GNED	RAMBHA	MALUD		11 KV F-1 BAJRAKOTE	RURAL	OTHER	4.016008						
455	TPSODL	BERHAMPUR	GNED	RAMBHA	MALUD		11 KV F-2 KP GADA	RURAL	OTHER	8.714182						
456	TPSODL	BERHAMPUR	GNED	RAMBHA	MALUD		11 KV F-3 MORADA	RURAL	OTHER	3.664366						
457	TPSODL	BERHAMPUR	GNED	RAMBHA	MALUD		11 KV F-4 FATEPUR	RURAL	OTHER	0.401972						
458	TPSODL	BHANJANAGAR	BOED	BOUDH	CHATRANGA		11 KV F-3 HARABHANGA	RURAL	OTHER							
459	TPSODL	BHANJANAGAR	BOED	BOUDH	CHATRANGA		11 KV F-4 DHALAPUR	RURAL	OTHER							
460	TPSODL	BHANJANAGAR	BNED	SORADA	BADAGADA		11 KV F-1 SIDHAPUR	RURAL	OTHER							
461	TPSODL	BHANJANAGAR	BNED	SORADA	BADAGADA		11 KV F-2 GANGAPUR (E	RURAL	OTHER							
462	TPSODL	BHANJANAGAR	BNED	SORADA	BADAGADA		11KV F-3 GOUDAGOTHA	RURAL	OTHER							
463	TPSODL	BHANJANAGAR	BNED	SORADA	BADAGADA		11 KV F-4 BADAGADA T	URBAN	OTHER							

464	TPSODL	BERHAMPUR CITY	BED-I	GOPALPUR	DURA RAMACHANDRAPUR	SEC01F01	11 KV F-1 DURA	RURAL	OTHER							
465	TPSODL	BERHAMPUR CITY	BED-I	GOPALPUR	DURA RAMACHANDRAPUR	SEC01F03	11 KV F-2 LI	RURAL	OTHER	0.01654						
466	TPSODL	BERHAMPUR CITY	BED-I	GOPALPUR	DURA RAMACHANDRAPUR	SEC01F02	11 KV F-3 RAMACHAND	RURAL	OTHER	0.42294						
467	TPSODL	BERHAMPUR CITY	BED-I	GOPALPUR	DURA RAMACHANDRAPUR	SEC01F04	11 KV F-4 GOUNJU	RURAL	OTHER	1.25796						
468	TPSODL	BERHAMPUR CITY	BED-I	GOPALPUR	NARENDRAPUR	SEC02F06	11 KV F-1 RAGHUNATHI	RURAL	OTHER	5.216418						
469	TPSODL	BERHAMPUR CITY	BED-I	GOPALPUR	NARENDRAPUR	SEC02F05	11 KV F-2 NARENDRAPU	RURAL	OTHER	14.8785						
470	TPSODL	BERHAMPUR CITY	BED-I	GOPALPUR	NARENDRAPUR	SEC02F04	11 KV F-3 TAGNAPALLI	RURAL	OTHER	0.3825						
471	TPSODL	BERHAMPUR CITY	BED-I	GOPALPUR	NARENDRAPUR	SEC02F01	11 KV F-4 RADAR	RURAL	OTHER	0.14489						
472	TPSODL	BERHAMPUR CITY	BED-I	GOPALPUR	NARENDRAPUR	SEC02F02	11 KV F-5 TATA COLONY	RURAL	OTHER	12.33						
473	TPSODL	BERHAMPUR CITY	BED-I	GOPALPUR	NARENDRAPUR	SEC02F03	11 KV F-6 JHADANGKUL	RURAL	OTHER	1.777005						
474	TPSODL	BHANJANAGAR	PED	G.UDAYGIRI	SANKARAKHOLA		11 KV F-2 LINEPADA	RURAL	OTHER							
475	TPSODL	BHANJANAGAR	PED	G.UDAYGIRI	SANKARAKHOLA		11 KV F-1 ADABADI (OLI	RURAL	OTHER							
476	TPSODL	BHANJANAGAR	PED	G.UDAYGIRI	SANKARAKHOLA		11 KV F-3 GUDRIGAON	RURAL	OTHER							
477	TPSODL	BERHAMPUR	GNED	RAMBHA	GANJAM		11 KV F-1 GANJAM	RURAL	OTHER							
478	TPSODL	BERHAMPUR	GNED	RAMBHA	HUMMA		11 KV F-1 PALUR	RURAL	OTHER	8.002852						
479	TPSODL	BERHAMPUR	GNED	RAMBHA	HUMMA		11 KV F-2 ABRA	RURAL	OTHER	5.051812						
480	TPSODL	BERHAMPUR	GNED	RAMBHA	HUMMA		11 KV F-3 KHANDADEUI	RURAL	OTHER							
481	TPSODL	BERHAMPUR	GNED	RAMBHA	HUMMA		11 KV F-4 RAMBHA (HU	RURAL	OTHER	4.342946						
482	TPSODL	BHANJANAGAR	BNED	BELAGUNTHA	BELAGUNTHA		11 KV F-1 BELLAGUNTH	URBAN	OTHER							
483	TPSODL	BHANJANAGAR	BNED	BELAGUNTHA	BELAGUNTHA		11 KV F-2 NUAGAON (B	RURAL	OTHER							
484	TPSODL	BHANJANAGAR	BNED	BELAGUNTHA	BELAGUNTHA		11KV F-3 AMBAPUA (BE	RURAL	OTHER							
485	TPSODL	BHANJANAGAR	BNED	BELAGUNTHA	BELAGUNTHA		11 KV F-4 UDRA	RURAL	OTHER							
486	TPSODL	BHANJANAGAR	BNED	BELAGUNTHA	BANKA		11 KV F-1 BANKA	RURAL	OTHER							
487	TPSODL	BHANJANAGAR	BNED	BELAGUNTHA	BANKA		11 KV F-2 JIRULI & GIRIS	RURAL	OTHER							
488	TPSODL	BHANJANAGAR	BNED	BELAGUNTHA	BANKA		11KV F-3 MANGALPUR	RURAL	OTHER							
489	TPSODL	BERHAMPUR CITY	BED-II	SDO-3	NK NAGAR	SEC14-F05	11 KV F-1 HOUSING BO/	URBAN	OTHER							
490	TPSODL	BERHAMPUR CITY	BED-II	SDO-3	NK NAGAR	SEC14-F04	11 KV F-2 GANDHINAGA	URBAN	OTHER	0.0146518						
491	TPSODL	BERHAMPUR CITY	BED-II	SDO-3	NK NAGAR	SEC14-F03	11 KV F-3 GANDHINAGA	URBAN	OTHER	2.633716						
492	TPSODL	BERHAMPUR CITY	BED-II	SDO-3	NK NAGAR	SEC14-F02	11 KV F-4 GOSANI NUA(	URBAN	OTHER							
493	TPSODL	BERHAMPUR CITY	BED-II	SDO-3	NK NAGAR	SEC14-F01	11 KV F-5 HIG	URBAN	OTHER							
494	TPSODL	BHANJANAGAR	BOED	MANMUNDA	BAUNSUNI		11 KV F-1 DAHIYA-2	RURAL	OTHER							
495	TPSODL	BHANJANAGAR	BOED	MANMUNDA	BAUNSUNI		11 KV F-2 DAHIYA-1	RURAL	OTHER							
496	TPSODL	BHANJANAGAR	BOED	MANMUNDA	BAUNSUNI		11 KV F-3 BAUNSUNI	RURAL	OTHER							
497	TPSODL	BHANJANAGAR	BOED	MANMUNDA	BAUNSUNI		11 KV F-4 BAHIRA	RURAL	OTHER							
498	TPSODL	BHANJANAGAR	BOED	MANMUNDA	BAUNSUNI		11 KV F-5 AINALAPALLI	RURAL	OTHER							
499	TPSODL	BHANJANAGAR	BOED	MANMUNDA	BAUNSUNI		11 KV F-6 GUNDULIA	RURAL	OTHER							
500	TPSODL	BHANJANAGAR	BOED	BOUDH	BOUDH		11 KV F-1 BOUDH TOWI	URBAN	OTHER							
501	TPSODL	BHANJANAGAR	BOED	BOUDH	BOUDH		11 KV F-2 BOUDH MEDI	URBAN	OTHER							
502	TPSODL	BHANJANAGAR	BOED	BOUDH	BOUDH		11 KV F-3 BAMUNDA	RURAL	OTHER							
503	TPSODL	BHANJANAGAR	BOED	BOUDH	BOUDH		11 KV F-4 KARADI	RURAL	OTHER							
504	TPSODL	BHANJANAGAR	BOED	BOUDH	BOUDH		11 KV F-5 BOUDH TOWI	URBAN	OTHER							
505	TPSODL	BHANJANAGAR	BOED	BOUDH	BOUDH		11 KV F-6 PODAGADA	URBAN	OTHER							
506	TPSODL	BHANJANAGAR	BOED	BOUDH	BOUDH		11 KV F-7 BOUDH PHD	URBAN	OTHER							
507	TPSODL	BERHAMPUR	GNED	RAMBHA	KHANDADEULI		11 KV F-1 KHANDADEUI	RURAL	OTHER							
508	TPSODL	BERHAMPUR	GNED	RAMBHA	KHANDADEULI		11 KV F-2 PALANGA	RURAL	OTHER							
509	TPSODL	BERHAMPUR	GNED	RAMBHA	KHANDADEULI		11 KV F-3 SANTOSHPUR	RURAL	OTHER							
510	TPSODL	BERHAMPUR	GNED	RAMBHA	KHANDADEULI		11 KV F-4 NUAPALLI	RURAL	OTHER							
511	TPSODL	BERHAMPUR	PSED	KODALA	BEGUNIAPADA		11 KV F-1 BEGUNIAPAD	RURAL	OTHER							
512	TPSODL	BERHAMPUR	PSED	KODALA	BEGUNIAPADA		11 KV F-2 MUNDULA	RURAL	OTHER	2.298252						
513	TPSODL	BERHAMPUR	PSED	KODALA	BEGUNIAPADA		11 KV F-3 ANGARGAON	RURAL	OTHER	5.136032						
514	TPSODL	BERHAMPUR	PSED	KODALA	BEGUNIAPADA		11 KV F-4 ODONAI	RURAL	OTHER							
515	TPSODL	BHANJANAGAR	BNED	BHANJANAGAR-II	DAHA		11 KV F-1 DAHA	RURAL	OTHER							
516	TPSODL	BHANJANAGAR	BNED	BHANJANAGAR-II	DAHA		11 KV F-2 BAIBALI	RURAL	OTHER							
517	TPSODL	BHANJANAGAR	BNED	BHANJANAGAR-II	DAHA		11KV F-3 DUMAKUMPA	RURAL	OTHER							
518	TPSODL	BHANJANAGAR	BNED	BHANJANAGAR-I	BHANJANAGAR/BHEJIPUT		11 KV F-1 BHANJANAGA	URBAN	OTHER							
519	TPSODL	BHANJANAGAR	BNED	BHANJANAGAR-I	BHANJANAGAR/BHEJIPUT		11 KV F-2 GAMUNDI	URBAN	OTHER							
520	TPSODL	BHANJANAGAR	BOED	BOUDH	BAGHIAPADA		11 KV F-1 BAGHIAPADA	RURAL	OTHER							
521	TPSODL	BHANJANAGAR	BOED	BOUDH	BAGHIAPADA		11 KV F-2 OLONDA	RURAL	OTHER							
522	TPSODL	BHANJANAGAR	BOED	BOUDH	BAGHIAPADA		11 KV F-3 BADHIGAON	RURAL	OTHER							
523	TPSODL	BHANJANAGAR	BOED	MANMUNDA	MANAMUNDA		11 KV F-1 SAHUPADA	RURAL	OTHER							
524	TPSODL	BHANJANAGAR	BOED	MANMUNDA	MANAMUNDA		11 KV F-2 BILASPUR	RURAL	OTHER							
525	TPSODL	BHANJANAGAR	BOED	MANMUNDA	MANAMUNDA		11 KV F-3 DAMAMUNDA	RURAL	OTHER							
526	TPSODL	BHANJANAGAR	BOED	MANMUNDA	MANAMUNDA		11 KV F-4 DEULI (MANA	RURAL	OTHER							
527	TPSODL	BHANJANAGAR	BOED	MANMUNDA	MANAMUNDA		11 KV F-5 DAPALA	RURAL	OTHER							
528	TPSODL	BHANJANAGAR	BOED	MANMUNDA	MANAMUNDA		11 KV F-6 GOBJORE	RURAL	OTHER							
529	TPSODL	BERHAMPUR	PSED	KODALA	SUMANDALA		11 KV F-1 TALASARA	RURAL	OTHER	1.56423						
530	TPSODL	BERHAMPUR	PSED	KODALA	SUMANDALA		11 KV F-2 ANGARGAON	RURAL	OTHER	4.52016						
531	TPSODL	BERHAMPUR	PSED	KODALA	SUMANDALA		11 KV F-3 SUMANDALA	RURAL	OTHER	2.30601						
532	TPSODL	BERHAMPUR	PSED	PURUSOTTAMPUR	PANDIA		11 KV F-2 PANDIA	RURAL	OTHER	8.543948						
533	TPSODL	BERHAMPUR	PSED	PURUSOTTAMPUR	PANDIA		11 KV F-3 BHUTASARSIN	RURAL	OTHER	8.253888						
534	TPSODL	BERHAMPUR	PSED	PURUSOTTAMPUR	PANDIA		11 KV F-1 PURUSOTTAM	URBAN	OTHER	8.861532						
535	TPSODL	BERHAMPUR	PSED	POLSARA	POLSARA/BELAGAON		11 KV F-1 LANGALESWA	RURAL	OTHER							
536	TPSODL	BERHAMPUR	PSED	POLSARA	POLSARA/BELAGAON		11 KV F-2 POLSARA TOV	URBAN	OTHER							
537	TPSODL	BERHAMPUR	PSED	POLSARA	POLSARA/BELAGAON		11 KV F-3 CHIRIKIPADA	RURAL	OTHER	3.305446						
538	TPSODL	BERHAMPUR	PSED	POLSARA	POLSARA/BELAGAON		11 KV F-4 BELAGAON	RURAL	OTHER							
539	TPSODL	BHANJANAGAR	BNED	BHANJANAGAR-I	BHANJANAGAR/BHEJIPUT		11KV F-3 BHANJANAGA	URBAN	OTHER							
540	TPSODL	BHANJANAGAR	BNED	BHANJANAGAR-II	BHANJANAGAR/BHEJIPUT		11 KV F-4 GANGAPUR (B	URBAN	OTHER							
541	TPSODL	BHANJANAGAR	BNED	BHANJANAGAR-II	BHANJANAGAR/BHEJIPUT		11KV F-5 KULADA	RURAL	OTHER							
542	TPSODL	BHANJANAGAR	BNED	BHANJANAGAR-II	LALSING		11 KV F-1 SANA KODAN	RURAL	OTHER							
543	TPSODL	BHANJANAGAR	BNED	BHANJANAGAR-II	LALSING		11 KV F-2 DURGA PRASA	RURAL	OTHER							
544	TPSODL	BERHAMPUR	GNED	KHALLIKOTE	KHALLIKOTE		11 KV F-1 SHYAMA SUN	RURAL	OTHER	7.404818						
545	TPSODL	BERHAMPUR	GNED	KHALLIKOTE	KHALLIKOTE		11 KV F-2 KHALLIKOTE T	RURAL	OTHER							
546	TPSODL	BERHAMPUR	GNED	KHALLIKOTE	KHALLIKOTE		11 KV F-3 KODALA REC	RURAL	OTHER	5.47722						
547	TPSODL	BERHAMPUR	GNED	KHALLIKOTE	KANHEIPUR		11 KV F-1 NARAYANI	RURAL	OTHER	4.560406						
548	TPSODL	BERHAMPUR	GNED	KHALLIKOTE	KANHEIPUR		11 KV F-2 LANGALESWA	RURAL	OTHER							
549	TPSODL	BERHAMPUR	GNED	KHALLIKOTE	KANHEIPUR		11 KV F-3 KESHPUR	RURAL	OTHER	6.83238						
550	TPSODL	BHANJANAGAR	BOED	MANMUNDA	GHANTAPADA		11 KV F-1 AMBAGAON (	RURAL	OTHER							
551	TPSODL	BHANJANAGAR	BOED	MANMUNDA	GHANTAPADA		11 KV F-2 KULTAJOR	RURAL	OTHER							
552	TPSODL	BHANJANAGAR	BOED	MANMUNDA	GHANTAPADA		11 KV F-3 GHANTAPADA	RURAL	OTHER							
553	TPSODL	BHANJANAGAR	BOED	MANMUNDA	GHANTAPADA		11 KV F-4 MANIKPUR (G	RURAL	OTHER							
554	TPSODL	BHANJANAGAR	BOED	MANMUNDA	GHANTAPADA		11 KV F-5 SILETPADA	RURAL	OTHER							
555	TPSODL	BERHAMPUR	PSED	POLSARA	HATIOTA		11 KV F-1 BALICHAI	RURAL	OTHER							
556	TPSODL	BERHAMPUR	PSED	POLSARA	HATIOTA		11 KV F-2 RUMAGADA	RURAL	OTHER							
557	TPSODL	BERHAMPUR	PSED	POLSARA	HATIOTA		11 KV F-3 BARTINI	RURAL	OTHER							

558	TPSODL	BERHAMPUR	PSED	POLSARA	HATIOTA		11 KV F-4 KALAMBA	RURAL	OTHER							
559	TPSODL	BHANJANAGAR	BNED	BELAGUNTHA	JN PRASAD		11 KV F-1 KADUA	RURAL	OTHER							
560	TPSODL	BHANJANAGAR	BNED	BELAGUNTHA	JN PRASAD		11 KV F-2 JHADABHUM	RURAL	OTHER							
561	TPSODL	BHANJANAGAR	BNED	BELAGUNTHA	JN PRASAD		11 KV F-3 PANCHBHUTI	RURAL	OTHER							
562	TPSODL	BHANJANAGAR	BNED	BELAGUNTHA	JN PRASAD		11 KV F-4 JN PRASAD TO	URBAN	OTHER							
563	TPSODL	BHANJANAGAR	BNED	BELAGUNTHA	BD PUR		11 KV F-1 BD PUR	RURAL	OTHER							
564	TPSODL	BHANJANAGAR	BNED	BELAGUNTHA	BD PUR		11 KV F-2 LUNIJHALA	RURAL	OTHER							
565	TPSODL	BHANJANAGAR	BNED	BELAGUNTHA	BD PUR		11 KV F-3 BANKATARA	RURAL	OTHER							
566	TPSODL	BERHAMPUR	GNED	KHALLIKOTE	KANHEIPUR		11 KV F-4 KANHEIPUR	RURAL	OTHER	12.91648						
567	TPSODL	BERHAMPUR	PSED	KODALA	KODALA		11 KV OLD GUDIALI	RURAL	OTHER	2.06664						
568	TPSODL	BERHAMPUR	PSED	KODALA	KODALA		11 KV F-1 PHASI	RURAL	OTHER	0.81306						
569	TPSODL	BERHAMPUR	PSED	KODALA	KODALA		11 KV F-2 KODALA	RURAL	OTHER	5.195864						
570	TPSODL	BERHAMPUR	PSED	KODALA	KODALA		11 KV F-3 MATHASARSI	RURAL	OTHER	5.607878						
571	TPSODL	BERHAMPUR	HED	SHERAGADA	SHERAGADA		11KV F-5 PADMANAVPU	RURAL	OTHER							
572	TPSODL	RAYAGADA	PKED	UPALADA	RAYAGADA		RAYAGADA	RURAL	OTHER							
573	TPSODL	RAYAGADA	PKED	UPALADA	RAYAGADA		JERANGA	RURAL	OTHER							
574	TPSODL	RAYAGADA	PKED	UPALADA	RAYAGADA		GUDDA	RURAL	OTHER							
575	TPSODL	RAYAGADA	PKED	R.UDAYGIRI	CHHELIGADA		CHHELIGADA	RURAL	OTHER							
576	TPSODL	RAYAGADA	PKED	R.UDAYGIRI	CHHELIGADA		RAMAGIRI	RURAL	OTHER							
577	TPSODL	RAYAGADA	PKED	R.UDAYGIRI	CHHELIGADA		R. UDAYAGIRI RURAL	RURAL	OTHER							
578	TPSODL	JEYPORE	JED	JEYPORE-II	BAGDERI		11 KV F1 BUDAGUDA	RURAL	OTHER							
579	TPSODL	JEYPORE	JED	JEYPORE-II	BAGDERI		11 KV F2 DANGARAPALI	RURAL	OTHER							
580	TPSODL	JEYPORE	JED	JEYPORE-II	BAGDERI		11 KV F3 BAGDERI	RURAL	OTHER							
581	TPSODL	JEYPORE	JED	JEYPORE-I	OLD CONTROL ROOM		11 KV KORAPUT	URBAN	OTHER							
582	TPSODL	JEYPORE	JED	JEYPORE-I	OLD CONTROL ROOM		11KV JEYPORE TOWN-1	URBAN	OTHER							
583	TPSODL	JEYPORE	JED	JEYPORE-I	OLD CONTROL ROOM		11 KV BRAHMANIGAON	URBAN	OTHER							
584	TPSODL	JEYPORE	JED	JEYPORE-I	OLD CONTROL ROOM		11KV OCC	RURAL	OTHER							
585	TPSODL	JEYPORE	JED	JEYPORE-I	OLD CONTROL ROOM		11KV RE	RURAL	OTHER							
586	TPSODL	RAYAGADA	PKED	R.UDAYGIRI	R.UDAYGIRI		SAMBALPUR	RURAL	OTHER							
587	TPSODL	RAYAGADA	PKED	R.UDAYGIRI	R.UDAYGIRI		PUTRUPADA	RURAL	OTHER							
588	TPSODL	RAYAGADA	PKED	R.UDAYGIRI	R.UDAYGIRI		R. UDAYAGIRI	RURAL	OTHER							
589	TPSODL	RAYAGADA	PKED	R.UDAYGIRI	NUAGADA		KEREDANGA	RURAL	OTHER							
590	TPSODL	RAYAGADA	PKED	R.UDAYGIRI	NUAGADA		LUHANGARA	RURAL	OTHER							
591	TPSODL	RAYAGADA	PKED	R.UDAYGIRI	NUAGADA		BRAHMARPUR	RURAL	OTHER							
592	TPSODL	RAYAGADA	PKED	R.UDAYGIRI	NUAGADA		NUAGADA	RURAL	OTHER							
593	TPSODL	JEYPORE	NED	PAPADAHANDI	KODINGA		11 KV FDR -3 KONDAPU	RURAL	OTHER							
594	TPSODL	JEYPORE	NED	PAPADAHANDI	KODINGA		11 KV FDR-2 KODIGAN	RURAL	OTHER							
595	TPSODL	JEYPORE	NED	PAPADAHANDI	KODINGA		11 KV FDR-1 DUMADEI	RURAL	OTHER							
596	TPSODL	JEYPORE	NED	PAPADAHANDI	KOSAGUMUDA		11 KV FDR - 1 KOSAGUN	URBAN	OTHER							
597	TPSODL	JEYPORE	NED	PAPADAHANDI	KOSAGUMUDA		11 KV FDR - 2 KOSAGUN	URBAN	OTHER							
598	TPSODL	JEYPORE	NED	PAPADAHANDI	KOSAGUMUDA		11 KV FDR - 3 CHIRMA	RURAL	OTHER							
599	TPSODL	JEYPORE	NED	PAPADAHANDI	KOSAGUMUDA		11 KV FDR - 4 BADAMBA	URBAN	OTHER							
600	TPSODL	JEYPORE	NED	PAPADAHANDI	KOSAGUMUDA		11 KV FDR - 5 RAJUDA	RURAL	OTHER							
601	TPSODL	JEYPORE	NED	PAPADAHANDI	KOSAGUMUDA		11 KV FDR - 6 MAJHIGU	RURAL	OTHER							
602	TPSODL	JEYPORE	NED	PAPADAHANDI	KOSAGUMUDA		11 KV FDR - 7 TEMARA	RURAL	OTHER							
603	TPSODL	JEYPORE	NED	UMERKOTE	UMERKOTE		11 KV F1- UMERKOTE T	URBAN	OTHER							
604	TPSODL	JEYPORE	NED	UMERKOTE	UMERKOTE		11 KV F2-DNK	URBAN	OTHER							
605	TPSODL	JEYPORE	NED	UMERKOTE	UMERKOTE		11 KV F3-BHARANDI	RURAL	OTHER							
606	TPSODL	JEYPORE	NED	UMERKOTE	UMERKOTE		11 KV F4 - KHANDA	RURAL	OTHER							
607	TPSODL	RAYAGADA	PKED	R.UDAYGIRI	BADAPADA		TITISINGH	RURAL	OTHER							
608	TPSODL	RAYAGADA	PKED	R.UDAYGIRI	BADAPADA		TABARADA(OLD KHAJUI	RURAL	OTHER							
609	TPSODL	RAYAGADA	PKED	MOHANA	MOHANA		ADAVA	RURAL	OTHER							
610	TPSODL	RAYAGADA	PKED	MOHANA	MOHANA		LUHAGUDI	RURAL	OTHER							
611	TPSODL	RAYAGADA	PKED	MOHANA	MOHANA		CHANDRAGIRI	RURAL	OTHER							
612	TPSODL	RAYAGADA	PKED	MOHANA	MOHANA		MOHANA TOWN	URBAN	OTHER							
613	TPSODL	JEYPORE	NED	UMERKOTE	UMERKOTE		11 KV F5 - MENDABEDA	RURAL	OTHER							
614	TPSODL	JEYPORE	NED	UMERKOTE	UMERKOTE		11 KV F6 - MEDICAL	URBAN	OTHER							
615	TPSODL	JEYPORE	NED	UMERKOTE	UMERKOTE		11 KV F7 - PHD	RURAL	OTHER							
616	TPSODL	RAYAGADA	PKED	MOHANA	LUHAGUDI		GOVINDAPUR	RURAL	OTHER							
617	TPSODL	RAYAGADA	PKED	MOHANA	LUHAGUDI		LUHAGUDI	RURAL	OTHER							
618	TPSODL	RAYAGADA	PKED	MOHANA	LUHAGUDI		CHANDIPUT	RURAL	OTHER							
619	TPSODL	RAYAGADA	PKED	MOHANA	ADAVA		ADAVA TOWN	URBAN	OTHER							
620	TPSODL	RAYAGADA	PKED	MOHANA	ADAVA		ALIGANDA	RURAL	OTHER							
621	TPSODL	RAYAGADA	PKED	MOHANA	ADAVA		BIRIKOTE	RURAL	OTHER							
622	TPSODL	RAYAGADA	PKED	MOHANA	PANIGANDA		KATAMA	RURAL	OTHER							
623	TPSODL	BHANJANAGAR	PED	PHULBANI	PHULBANI		11 KV F-6 KATRINGIA	RURAL	OTHER							
624	TPSODL	RAYAGADA	PKED	MOHANA	PANIGANDA		PANIGANDA	RURAL	OTHER							
625	TPSODL	JEYPORE	JED	JEYPORE-I	MARTHAMPUT		11 KV F1 MACHKUND	RURAL	OTHER							
626	TPSODL	JEYPORE	JED	JEYPORE-I	MARTHAMPUT		11KV F2 GUNEIPADA	RURAL	OTHER							
627	TPSODL	JEYPORE	JED	JEYPORE-I	MARTHAMPUT		11KV F3 GODIHANJAR	RURAL	OTHER							
628	TPSODL	JEYPORE	JED	JEYPORE-I	OLD CONTROL ROOM		11KV JAYANAGAR	URBAN	OTHER							
629	TPSODL	JEYPORE	JED	JEYPORE-I	OLD CONTROL ROOM		11KV JEYPORE TOWN-2	URBAN	OTHER							
630	TPSODL	JEYPORE	KED	KORAPUT	OMP KORAPUT		11 KV F-1 OMP/SILK BO	URBAN	OTHER							
631	TPSODL	JEYPORE	KED	KORAPUT	OMP KORAPUT		11 KV F-2 PODAGADA	RURAL	OTHER							
632	TPSODL	JEYPORE	KED	KORAPUT	KOLAB NAGAR		11 KV F-1 KOLABNAGAR	URBAN	OTHER							
633	TPSODL	JEYPORE	KED	KORAPUT	KOLAB NAGAR		11 KV F-2 SETTLE TANK	RURAL	OTHER							
634	TPSODL	JEYPORE	KED	KORAPUT	KOLAB NAGAR		11 KV F-3 INTENKA	URBAN	OTHER							
635	TPSODL	JEYPORE	KED	KORAPUT	KOLAB NAGAR		11 KV F-4 GALLERY & DA	RURAL	OTHER							
636	TPSODL	JEYPORE	KED	KORAPUT	KORAPUT OLD		11 KV F-4 CHAPPER	URBAN	OTHER							
637	TPSODL	JEYPORE	KED	KORAPUT	KORAPUT OLD		11 KV F-3 COFEE BOARD	URBAN	OTHER							
638	TPSODL	JEYPORE	KED	KORAPUT	KORAPUT OLD		11 KV F-1 KORAPUT NO	RURAL	OTHER							
639	TPSODL	JEYPORE	KED	KORAPUT	KORAPUT OLD		11 KV F-2 KORAPUT NO	RURAL	OTHER							
640	TPSODL	JEYPORE	KED	SUNABEDA	SUNABEDA		11 KV F-1 AEF	RURAL	OTHER							
641	TPSODL	JEYPORE	KED	SUNABEDA	SUNABEDA		11 KV F-2 CENTRAL UNI	RURAL	OTHER							
642	TPSODL	JEYPORE	KED	SUNABEDA	SUNABEDA		11 KV F-3 JADAGUDA	URBAN	OTHER							
643	TPSODL	JEYPORE	KED	SUNABEDA	SUNABEDA		11 KV F-4 NAC RURAL	RURAL	OTHER							
644	TPSODL	JEYPORE	KED	SUNABEDA	SUNABEDA		11 KV F-5 NAC TOWN (S	URBAN	OTHER							
645	TPSODL	JEYPORE	KED	SUNABEDA	SUNABEDA		11 KV F-6 PHD SUNABEI	RURAL	OTHER							
646	TPSODL	JEYPORE	KED	SUNABEDA	SUNABEDA		11 KV F-7 SIMILIGUDA N	RURAL	OTHER							
647	TPSODL	JEYPORE	KED	SUNABEDA	BILAIGUDA/ SIMLIGUDA		11 KV F-2 TOWN BILAIG	URBAN	OTHER							
648	TPSODL	JEYPORE	KED	SUNABEDA	BILAIGUDA/ SIMLIGUDA		11 KV F-3 SUBAI	RURAL	OTHER							
649	TPSODL	JEYPORE	KED	SUNABEDA	POTTANGI		11 KV F-1 NUAGAON (P	RURAL	OTHER							
650	TPSODL	JEYPORE	KED	SUNABEDA	POTTANGI		11 KV F-2 POTTANGI TO	URBAN	OTHER							
651	TPSODL	JEYPORE	KED	SUNABEDA	POTTANGI		11 KV F-3 PUKALI	RURAL	OTHER							

652	TPSODL	JEYPORE	KED	SUNABEDA	POTTANGI		11 KV F-4 SUNKI	RURAL	OTHER							
653	TPSODL	BERHAMPUR CITY	BED-I	INDUSTRIAL	GOODSHED	SEC05-F04	11 KV F-4 ANKULI NH	URBAN	OTHER							
654	TPSODL	JEYPORE	KED	LAXMIPUR	LAXMIPUR		11 KV F-1 BURJA (LAXM	RURAL	OTHER							
655	TPSODL	JEYPORE	KED	LAXMIPUR	LAXMIPUR		11 KV F-2 CHAMPI	RURAL	OTHER							
656	TPSODL	JEYPORE	KED	LAXMIPUR	LAXMIPUR		11 KV F-3 LAXMIPUR S.E	RURAL	OTHER							
657	TPSODL	JEYPORE	KED	LAXMIPUR	LAXMIPUR		11 KV F-4 LAXMIPUR TO	URBAN	OTHER							
658	TPSODL	JEYPORE	KED	LAXMIPUR	LAXMIPUR		11 KV F-5 PRADHAN IND	RURAL	OTHER							
659	TPSODL	JEYPORE	KED	LAXMIPUR	LAXMIPUR		11 KV F-6 RAPKONA	RURAL	OTHER							
660	TPSODL	JEYPORE	KED	LAXMIPUR	NARAYANPATNA		11 KV F-1 NARAYANPAT	URBAN	OTHER							
661	TPSODL	JEYPORE	KED	LAXMIPUR	NARAYANPATNA		11 KV F-2 DANDABADI (	RURAL	OTHER							
662	TPSODL	JEYPORE	KED	LAXMIPUR	NARAYANPATNA		11 KV F-3 BALIPETA	RURAL	OTHER							
663	TPSODL	JEYPORE	KED	LAXMIPUR	PODAGAD		11 KV F-1 MUJANG	RURAL	OTHER							
664	TPSODL	JEYPORE	KED	LAXMIPUR	PODAGAD		11 KV F-2 GADIAGUDA	RURAL	OTHER							
665	TPSODL	JEYPORE	KED	LAXMIPUR	PODAGAD		11 KV F-3 CHOTAGUDA	RURAL	OTHER							
666	TPSODL	JEYPORE	KED	KORAPUT	PODAGAD		11 KV F-4 PODAGADA T	URBAN	OTHER							
667	TPSODL	JEYPORE	NED	NABARANGPUR	CHUTIAGUDA		11 KV F2 - JAMUGUDA	RURAL	OTHER							
668	TPSODL	JEYPORE	NED	NABARANGPUR	CHUTIAGUDA		11 KV F3 - CHUTIAGUDA	RURAL	OTHER							
669	TPSODL	JEYPORE	NED	PAPADAHANDI	PAPADAHANDI		11 KV F1 - PAPDAHAND	URBAN	OTHER							
670	TPSODL	JEYPORE	NED	PAPADAHANDI	PAPADAHANDI		11 KV F2 - KALIAGUDA	RURAL	OTHER							
671	TPSODL	JEYPORE	NED	PAPADAHANDI	BABAJIGUDA		11 KV F1 -TUMBARLLA	RURAL	OTHER							
672	TPSODL	JEYPORE	NED	PAPADAHANDI	BABAJIGUDA		11 KV F2 - SINDHIGUDA	RURAL	OTHER							
673	TPSODL	JEYPORE	NED	PAPADAHANDI	BABAJIGUDA		11 KV F3 - MAIDALPUR	RURAL	OTHER							
674	TPSODL	JEYPORE	NED	UMERKOTE	JHARIGAM		11 KV F1-EKAMBA	RURAL	OTHER							
675	TPSODL	JEYPORE	NED	UMERKOTE	JHARIGAM		11 KV F2-CHATAGUDA	RURAL	OTHER							
676	TPSODL	JEYPORE	NED	UMERKOTE	JHARIGAM		11 KV F3 - JHARIGAM T	URBAN	OTHER							
677	TPSODL	JEYPORE	NED	UMERKOTE	JHARIGAM		11 KV F4- CHACHA	RURAL	OTHER							
678	TPSODL	JEYPORE	NED	UMERKOTE	JHARIGAM		11 KV F5- HATIBADI	RURAL	OTHER							
679	TPSODL	JEYPORE	NED	UMERKOTE	ADHIKARIGUDA		11 KV F1- PUJARIGUDA	RURAL	OTHER							
680	TPSODL	JEYPORE	NED	UMERKOTE	ADHIKARIGUDA		11 KV F2-SILATI	RURAL	OTHER							
681	TPSODL	JEYPORE	NED	PAPADAHANDI	DABUGAON		11 KV F1- JATABAHAL	RURAL	OTHER							
682	TPSODL	JEYPORE	NED	PAPADAHANDI	DABUGAON		11 KV F2 - DABUGAON T	URBAN	OTHER							
683	TPSODL	JEYPORE	NED	PAPADAHANDI	DABUGAON		11 KV F3- GUMUDA	RURAL	OTHER							
684	TPSODL	JEYPORE	NED	UMERKOTE	BEHEDA		11 KV F1 - BEHEDA	RURAL	OTHER							
685	TPSODL	JEYPORE	NED	UMERKOTE	BEHEDA		11 KV F2- BURJA	RURAL	OTHER							
686	TPSODL	JEYPORE	NED	UMERKOTE	BEHEDA		11 KV F3 - SUKIGAON	RURAL	OTHER							
687	TPSODL	JEYPORE	NED	UMERKOTE	RAIGHAR		11 KV F1 - RAIGHAR TO	URBAN	OTHER							
688	TPSODL	JEYPORE	NED	UMERKOTE	RAIGHAR		11 KV F2- KUNDAI	RURAL	OTHER							
689	TPSODL	JEYPORE	NED	UMERKOTE	RAIGHAR		11 KV F3 - GURUSINGHA	RURAL	OTHER							
690	TPSODL	JEYPORE	NED	UMERKOTE	RAIGHAR		11 KV F4 - GONA	RURAL	OTHER							
691	TPSODL	JEYPORE	JED	JEYPORE-I	DIGAPUR		11 KV F1 MASIGAM	RURAL	OTHER							
692	TPSODL	JEYPORE	JED	JEYPORE-I	DIGAPUR		11KV F2 NADIALPALLI	RURAL	OTHER							
693	TPSODL	JEYPORE	JED	JEYPORE-I	DIGAPUR		11 KV F3 DIGAPUR	RURAL	OTHER							
694	TPSODL	JEYPORE	JED	JEYPORE-II	JAMUNDA/HARDADAULI		11 KV F1 TELIA	RURAL	OTHER							
695	TPSODL	JEYPORE	JED	JEYPORE-II	JAMUNDA/HARDADAULI		11KV F2 KANGA	RURAL	OTHER							
696	TPSODL	JEYPORE	JED	JEYPORE-II	JAMUNDA/HARDADAULI		11 KV F3 JAMUNDA	RURAL	OTHER							
697	TPSODL	JEYPORE	JED	JEYPORE-II	JAMUNDA/HARDADAULI		11 KV F4 BADAPADA	RURAL	OTHER							
698	TPSODL	JEYPORE	NED	UMERKOTE	CHANDAHANDI		11 KV F1- CHANDAHAN	URBAN	OTHER							
699	TPSODL	JEYPORE	NED	UMERKOTE	CHANDAHANDI		11 KV F2-DEOBANDH	RURAL	OTHER							
700	TPSODL	JEYPORE	NED	UMERKOTE	CHANDAHANDI		11 KV F3-DONDAMUND	RURAL	OTHER							
701	TPSODL	JEYPORE	NED	UMERKOTE	CHANDAHANDI		11 KV F4 - BEHERAMUN	RURAL	OTHER							
702	TPSODL	RAYAGADA	PKED	MOHANA	CHANDRAGIRI		BAGHAMARI	RURAL	OTHER							
703	TPSODL	RAYAGADA	PKED	MOHANA	CHANDRAGIRI		ANTARBA	RURAL	OTHER							
704	TPSODL	RAYAGADA	PKED	MOHANA	CHANDRAGIRI		CHANDRAGIRI	RURAL	OTHER							
705	TPSODL	RAYAGADA	PKED	MOHANA	CHANDRAGIRI		MAHENDRAGADA	RURAL	OTHER							
706	TPSODL	RAYAGADA	PKED	MOHANA	BRAHMANIGAON		BRAHMANIGAON	RURAL	OTHER							
707	TPSODL	RAYAGADA	PKED	MOHANA	BRAHMANIGAON		KATIGAON	RURAL	OTHER							
708	TPSODL	RAYAGADA	PKED	MOHANA	BRAHMANIGAON		GADAPUR	RURAL	OTHER							
709	TPSODL	JEYPORE	NED	UMERKOTE	RAIGHAR		11 KV F5 - TURUDIHI	RURAL	OTHER							
710	TPSODL	JEYPORE	NED	UMERKOTE	RAIGHAR		11 KV F6 - CHHATABEDA	RURAL	OTHER							
711	TPSODL	BERHAMPUR CITY	BED-I	INDUSTRIAL	GOODSHED	SEC05-F02	11 KV F-3 HILLPATNA	URBAN	OTHER							
712	TPSODL	JEYPORE	JED	JEYPORE-I	KALIAGAON		11 KV F1 PHAMPUNI	RURAL	OTHER							
713	TPSODL	JEYPORE	JED	JEYPORE-I	KALIAGAON		11KV F2 GHATABAGRA	RURAL	OTHER							
714	TPSODL	JEYPORE	JED	JEYPORE-I	KALIAGAON		11 KV F3 KHADAPA	RURAL	OTHER							
715	TPSODL	JEYPORE	JED	JEYPORE-I	KALIAGAON		11 KV F4 KALIAGAON	RURAL	OTHER							
716	TPSODL	JEYPORE	JED	BORIGUMMA	KEBIDI		11 KV F3 KEBIDI	RURAL	OTHER							
717	TPSODL	JEYPORE	JED	BORIGUMMA	KEBIDI		11KV F2 TELENGIRI	RURAL	OTHER							
718	TPSODL	JEYPORE	JED	BORIGUMMA	KEBIDI		11 KV F1 PUJARIPUT	RURAL	OTHER							
719	TPSODL	JEYPORE	JED	BORIGUMMA	KOTPAD		11 KV F1 KOTPAD TOWN	URBAN	OTHER							
720	TPSODL	JEYPORE	JED	BORIGUMMA	KOTPAD		11KV F2 PHD	URBAN	OTHER							
721	TPSODL	JEYPORE	JED	BORIGUMMA	KOTPAD		11 KV F3 GIRLA	RURAL	OTHER							
722	TPSODL	JEYPORE	JED	BORIGUMMA	KOTPAD		11 KV F4 SADARANGA	RURAL	OTHER							
723	TPSODL	JEYPORE	JED	BORIGUMMA	KOTPAD		11 KV F5 BASTAMABA	RURAL	OTHER							
724	TPSODL	JEYPORE	JED	BORIGUMMA	KOTPAD		11 KV F6 CHANDILI	RURAL	OTHER							
725	TPSODL	JEYPORE	JED	JEYPORE-II	KUNDRA		11 KV F1 KUNDRA	URBAN	OTHER							
726	TPSODL	JEYPORE	JED	JEYPORE-II	KUNDRA		11KV F2 KUNDRA RE	RURAL	OTHER							
727	TPSODL	JEYPORE	JED	JEYPORE-II	KUNDRA		11 KV F3 DONGER PAUN	RURAL	OTHER							
728	TPSODL	JEYPORE	JED	JEYPORE-II	KUNDRA		11 KV F4 LIMA	RURAL	OTHER							
729	TPSODL	JEYPORE	JED	JEYPORE-II	KUNDRA		11 KV F5 UDULGUDA	RURAL	OTHER							
730	TPSODL	JEYPORE	JED	BORIGUMMA	KUSUMI		11 KV F1 BOBEYA	RURAL	OTHER							
731	TPSODL	JEYPORE	JED	BORIGUMMA	KUSUMI		11KV F2 CHITRA	RURAL	OTHER							
732	TPSODL	JEYPORE	JED	BORIGUMMA	KUSUMI		11 KV F3 KUSUMI TOWN	RURAL	OTHER							
733	TPSODL	JEYPORE	JED	JEYPORE-I	DASMANTPUR(JEYPORE DIV)		11KV F1 TANGNIGUDA	RURAL	OTHER							
734	TPSODL	JEYPORE	JED	JEYPORE-I	DASMANTPUR(JEYPORE DIV)		11KV F2 CHIKIMA	RURAL	OTHER							
735	TPSODL	JEYPORE	JED	JEYPORE-I	DASMANTPUR(JEYPORE DIV)		11KV F3 LAXMIPUR	RURAL	OTHER							
736	TPSODL	JEYPORE	JED	JEYPORE-I	DASMANTPUR(JEYPORE DIV)		11KV F4 DASMANTPUR	RURAL	OTHER							
737	TPSODL	BERHAMPUR CITY	BED-I	INDUSTRIAL	GOODSHED	SEC05-F01	11 KV F-1 GOODSHED	URBAN	OTHER							
738	TPSODL	BERHAMPUR CITY	BED-I	INDUSTRIAL	GOODSHED	SEC05-F03	11 KV F-2 LANJIPALLI	URBAN	OTHER							
739	TPSODL	JEYPORE	JED	BORIGUMMA	B. SINGPUR		11 KV NARIGAON	RURAL	OTHER							
740	TPSODL	JEYPORE	JED	BORIGUMMA	B. SINGPUR		11 KV SARGIGUDA	RURAL	OTHER							
741	TPSODL	JEYPORE	JED	BORIGUMMA	B. SINGPUR		11 KV B.SINGIPUR	RURAL	OTHER							
742	TPSODL	JEYPORE	JED	JEYPORE-I	BALIA		11 KV F1 ANTA	RURAL	OTHER							
743	TPSODL	JEYPORE	JED	JEYPORE-I	BALIA		11 KV F2 PATRAPUT	RURAL	OTHER							
744	TPSODL	JEYPORE	JED	JEYPORE-I	BALIA		11 KV F3 KUMBHARPUT	RURAL	OTHER							
745	TPSODL	JEYPORE	JED	BORIGUMMA	SB NUAGAON		11 KV F1 EKAMBA	RURAL	OTHER							

746	TPSODL	JEYPORE	JED	BORIGUMMA	SB NUAGAON		11KV F2 BHANSULI	RURAL	OTHER							
747	TPSODL	JEYPORE	JED	BORIGUMMA	SB NUAGAON		11 KV F3 SB NUAGAON	RURAL	OTHER							
748	TPSODL	JEYPORE	JED	JEYPORE-I	LAMTAPUT		11 KV JALAPUT	RURAL	OTHER							
749	TPSODL	JEYPORE	JED	JEYPORE-I	LAMTAPUT		11KV SILPONDI	RURAL	OTHER							
750	TPSODL	JEYPORE	JED	JEYPORE-I	LAMTAPUT		11 KV LAMTAPUT TOWI	RURAL	OTHER							
751	TPSODL	JEYPORE	JED	JEYPORE-I	LAMTAPUT		11KV BALLEL	RURAL	OTHER							
752	TPSODL	BERHAMPUR	GNED	KHALLIKOTE	ODIALPUR		11 KV F-1 PATHARA	RURAL	OTHER							
753	TPSODL	JEYPORE	JED	JEYPORE-I	BOIPARIGUDA		11 KV F1 RAMAGIRI	RURAL	OTHER							
754	TPSODL	JEYPORE	JED	JEYPORE-I	BOIPARIGUDA		11 KV F2 BOIPARIGUDA	URBAN	OTHER							
755	TPSODL	JEYPORE	JED	JEYPORE-I	BOIPARIGUDA		11 KV F3 DORAGUDA	RURAL	OTHER							
756	TPSODL	JEYPORE	JED	JEYPORE-I	BOIPARIGUDA		11KV F4 DIGAPUR	RURAL	OTHER							
757	TPSODL	JEYPORE	JED	BORIGUMMA	BORIGUMMA		11KV F1 BORIGUMMA T	URBAN	OTHER							
758	TPSODL	JEYPORE	JED	BORIGUMMA	BORIGUMMA		11 KV F2 BLOCK COLON	URBAN	OTHER							
759	TPSODL	JEYPORE	JED	BORIGUMMA	BORIGUMMA		11 KV F3 BONDAGUDA	RURAL	OTHER							
760	TPSODL	JEYPORE	JED	BORIGUMMA	BORIGUMMA		11 KV F4 JAYANTAGIRI	RURAL	OTHER							
761	TPSODL	JEYPORE	JED	BORIGUMMA	CHALLANGUDA		11 KV F1 DENGAPADAR	RURAL	OTHER							
762	TPSODL	JEYPORE	JED	BORIGUMMA	CHALLANGUDA		11KV F2 KALIAGUDA	RURAL	OTHER							
763	TPSODL	JEYPORE	JED	BORIGUMMA	CHALLANGUDA		11 KV F3 KAMRA	RURAL	OTHER							
764	TPSODL	JEYPORE	JED	BORIGUMMA	KAMTA/GUMUDA		11 KV F2 KUMULI	RURAL	OTHER							
765	TPSODL	JEYPORE	JED	BORIGUMMA	KAMTA/GUMUDA		11 KV KAMTA	RURAL	OTHER							
766	TPSODL	JEYPORE	JED	BORIGUMMA	KAMTA/GUMUDA		11KV F1 KATHARAGADA	RURAL	OTHER							
767	TPSODL	JEYPORE	JED	BORIGUMMA	KAMTA/GUMUDA		11 KV F3 MUNJA/BADIG	RURAL	OTHER							
768	TPSODL	JEYPORE	JED	JEYPORE-I	RAMGIRI(JEYPORE CIRCLE)		11 KV RAMAGIRI	RURAL	OTHER							
769	TPSODL	JEYPORE	JED	JEYPORE-I	RAMGIRI(JEYPORE CIRCLE)		11KV HALADIKUNDA	RURAL	OTHER							
770	TPSODL	JEYPORE	JED	JEYPORE-I	RAMGIRI(JEYPORE CIRCLE)		11 KV DANDABADI	RURAL	OTHER							
771	TPSODL	JEYPORE	JED	JEYPORE-I	DANGAGUDA		11 KV GANDHI CHHAK	RURAL	OTHER							
772	TPSODL	JEYPORE	JED	JEYPORE-I	DANGAGUDA		11KV DANGAGUDA	RURAL	OTHER							
773	TPSODL	JEYPORE	JED	JEYPORE-I	DANGAGUDA		11 KV KALAGUDA	RURAL	OTHER							
774	TPSODL	JEYPORE	JED	JEYPORE-I	DANGAGUDA		11KV BARINIPUT RURAL	RURAL	OTHER							
775	TPSODL	JEYPORE	MED	MALKANGIRI	BODILI		11 KV F1 POTTERU	RURAL	OTHER							
776	TPSODL	JEYPORE	MED	MALKANGIRI	BODILI		11KV F2 MV-64/10	RURAL	OTHER							
777	TPSODL	JEYPORE	MED	MALKANGIRI	BODILI		11 KV F3 MV-55	RURAL	OTHER							
778	TPSODL	JEYPORE	MED	MALKANGIRI	BODILI		11KV F4 SIKHAPALLY	RURAL	OTHER							
779	TPSODL	JEYPORE	MED	BALIMELA	GOVINDPALLI		11 KV F1 GOVINDAPALL	RURAL	OTHER							
780	TPSODL	JEYPORE	MED	BALIMELA	GOVINDPALLI		11KV F2 SAPTADHARA	RURAL	OTHER							
781	TPSODL	JEYPORE	MED	BALIMELA	GOVINDPALLI		11 KV F3 BADADURAL	RURAL	OTHER							
782	TPSODL	JEYPORE	MED	BALIMELA	GOVINDPALLI		11KV F4 UDULIBEDA	RURAL	OTHER							
783	TPSODL	JEYPORE	MED	MALKANGIRI	KALIMELA		11 KV F1 KALIMELA TOV	URBAN	OTHER							
784	TPSODL	JEYPORE	MED	MALKANGIRI	KALIMELA		11KV F2 MV-72	RURAL	OTHER							
785	TPSODL	JEYPORE	MED	MALKANGIRI	KALIMELA		11KV F3 UNDRUKONDA	RURAL	OTHER							
786	TPSODL	JEYPORE	JED	BORIGUMMA	KAMTA/GUMUDA		11 KV F4 HARDALI	RURAL	OTHER							
787	TPSODL	JEYPORE	JED	JEYPORE-II	NEW BUS STAND		11 KV COURT	URBAN	OTHER							
788	TPSODL	JEYPORE	JED	JEYPORE-II	NEW BUS STAND		11KV JYP TOWN	URBAN	OTHER							
789	TPSODL	JEYPORE	JED	JEYPORE-II	NEW BUS STAND		11 KV LINGRAJ NAGAR	RURAL	OTHER							
790	TPSODL	JEYPORE	JED	JEYPORE-II	NEW BUS STAND		11KV UMRI	RURAL	OTHER							
791	TPSODL	JEYPORE	JED	JEYPORE-II	RANDAPALLI		11 KV A.I.R	RURAL	OTHER							
792	TPSODL	JEYPORE	JED	JEYPORE-II	RANDAPALLI		11KV AMBAGUDA	RURAL	OTHER							
793	TPSODL	JEYPORE	JED	JEYPORE-II	RANDAPALLI		11 KV HADIA	RURAL	OTHER							
794	TPSODL	JEYPORE	JED	JEYPORE-II	RANDAPALLI		11KV EKAMBA	RURAL	OTHER							
795	TPSODL	JEYPORE	MED	MALKANGIRI	KALIMELA		11 KV F4 BHEJANGIWAD	RURAL	OTHER							
796	TPSODL	JEYPORE	MED	BALIMELA	K GUMMA		11KV GUMMA TOWN	URBAN	OTHER							
797	TPSODL	JEYPORE	MED	BALIMELA	K GUMMA		11KV SOMNATHPUR	RURAL	OTHER							
798	TPSODL	JEYPORE	MED	BALIMELA	KHAIRAPUT		11KV KHAIRPUT TOWN	URBAN	OTHER							
799	TPSODL	JEYPORE	MED	BALIMELA	KHAIRAPUT		11KV MUDULIPADA	RURAL	OTHER							
800	TPSODL	JEYPORE	MED	BALIMELA	KHAIRAPUT		11KV KHEMAGURU	RURAL	OTHER							
801	TPSODL	JEYPORE	MED	BALIMELA	KHAIRAPUT		11KV MUNDIGUDA	RURAL	OTHER							
802	TPSODL	JEYPORE	MED	BALIMELA	CHITRAKONDA		11KV JANBAI	RURAL	OTHER							
803	TPSODL	JEYPORE	MED	BALIMELA	CHITRAKONDA		11KV DORAGUDA	RURAL	OTHER							
804	TPSODL	JEYPORE	MED	BALIMELA	CHITRAKONDA		11KV CHITRAKONDA TO	URBAN	OTHER							
805	TPSODL	JEYPORE	MED	BALIMELA	BALIMELA		11KV BALIMELA TOWN	URBAN	OTHER							
806	TPSODL	JEYPORE	MED	BALIMELA	BALIMELA		11KV MICRO	RURAL	OTHER							
807	TPSODL	JEYPORE	MED	BALIMELA	BALIMELA		11KV OLD KORKUNDA	RURAL	OTHER							
808	TPSODL	JEYPORE	MED	BALIMELA	BALIMELA		11KV AYAPPA	RURAL	OTHER							
809	TPSODL	JEYPORE	MED	BALIMELA	BALIMELA		11KV SADASHIVPUR	RURAL	OTHER							
810	TPSODL	JEYPORE	MED	BALIMELA	MV-27		11 KV F1 KAMWADA	RURAL	OTHER							
811	TPSODL	JEYPORE	MED	BALIMELA	MV-27		11KV F2 MARIWADA	RURAL	OTHER							
812	TPSODL	JEYPORE	MED	BALIMELA	MV-27		11KV F3 TUMSAPALLI	RURAL	OTHER							
813	TPSODL	JEYPORE	KED	SUNABEDA	KUNDULI		11 KV F-1 KUNDULI	URBAN	OTHER							
814	TPSODL	JEYPORE	KED	SUNABEDA	AMLABADI / DAMANJODI		11 KV F-1 COLONY DAM	RURAL	OTHER							
815	TPSODL	JEYPORE	KED	SUNABEDA	AMLABADI / DAMANJODI		11 KV F-2 TOWN BEJHA	URBAN	OTHER							
816	TPSODL	JEYPORE	MED	MALKANGIRI	PANDRIPANI		11 KV F1 PANDRIPANI	RURAL	OTHER							
817	TPSODL	JEYPORE	MED	MALKANGIRI	PANDRIPANI		11KV F2 KOTAMETA	RURAL	OTHER							
818	TPSODL	JEYPORE	MED	MALKANGIRI	PANDRIPANI		11KV F3 PADMAGIRI	RURAL	OTHER							
819	TPSODL	JEYPORE	MED	MALKANGIRI	PODIA		11 KV MV-58	RURAL	OTHER							
820	TPSODL	JEYPORE	MED	MALKANGIRI	PODIA		11KV F2 PODIA TOWN	URBAN	OTHER							
821	TPSODL	JEYPORE	MED	MALKANGIRI	PODIA		11KV F3 KALDAPALLI	RURAL	OTHER							
822	TPSODL	JEYPORE	MED	MALKANGIRI	PODIA		11KV F4 MATTERU	RURAL	OTHER							
823	TPSODL	JEYPORE	KED	LAXMIPUR	KUMBHARIPUT		11 KV F-1 KUMBHARIPU	RURAL	OTHER							
824	TPSODL	JEYPORE	KED	LAXMIPUR	KUMBHARIPUT		11 KV F-2 DUMA DANG	RURAL	OTHER							
825	TPSODL	JEYPORE	KED	LAXMIPUR	KUMBHARIPUT		11 KV F-3 JAGAGUDA	RURAL	OTHER							
826	TPSODL	JEYPORE	KED	SUNABEDA	NANDAPUR		11 KV F-1 NANDAPUR T	URBAN	OTHER							
827	TPSODL	JEYPORE	KED	SUNABEDA	NANDAPUR		11 KV F-2 NANDAPUR T	URBAN	OTHER							
828	TPSODL	JEYPORE	KED	SUNABEDA	NANDAPUR		11 KV F-3 PADUA	RURAL	OTHER							
829	TPSODL	JEYPORE	KED	SUNABEDA	NANDAPUR		11 KV F-4 PUJARIPUT (N	RURAL	OTHER							
830	TPSODL	JEYPORE	KED	LAXMIPUR	BANDHUGAON		11 KV F-1 ALAMANDA	RURAL	OTHER							
831	TPSODL	JEYPORE	KED	LAXMIPUR	BANDHUGAON		11 KV F-2 BANDHUGAO	URBAN	OTHER							
832	TPSODL	JEYPORE	KED	LAXMIPUR	BANDHUGAON		11 KV F-3 NILABADI	RURAL	OTHER							
833	TPSODL	JEYPORE	MED	MALKANGIRI	MV-79		11 KV MPV-83	RURAL	OTHER							
834	TPSODL	JEYPORE	MED	MALKANGIRI	MV-79		11KV F2 MOTU	RURAL	OTHER							
835	TPSODL	JEYPORE	MED	MALKANGIRI	MV-79		11KV MV-79 TOWN	RURAL	OTHER							
836	TPSODL	JEYPORE	MED	MALKANGIRI	MV-79		11KV F4 MV-96	RURAL	OTHER							
837	TPSODL	JEYPORE	MED	BALIMELA	MATHILI		11 KV MATHILI TOWN	URBAN	OTHER							
838	TPSODL	JEYPORE	MED	BALIMELA	MATHILI		11KV MENDUKULI	RURAL	OTHER							
839	TPSODL	JEYPORE	MED	BALIMELA	MATHILI		11KV PANGAM	RURAL	OTHER							

840	TPSODL	JEYPORE	KED	LAXMIPUR	DASMANTPUR(KORAPUT DIV)		11 KV F-1 DASAMANTPU	URBAN	OTHER							
841	TPSODL	JEYPORE	KED	LAXMIPUR	DASMANTPUR(KORAPUT DIV)		11 KV F-2 LULA	RURAL	OTHER							
842	TPSODL	JEYPORE	KED	LAXMIPUR	DASMANTPUR(KORAPUT DIV)		11 KV F-3 KUNTESH	RURAL	OTHER							
843	TPSODL	JEYPORE	KED	LAXMIPUR	DASMANTPUR(KORAPUT DIV)		11 KV F-4 GIRLIGUMA	RURAL	OTHER							
844	TPSODL	JEYPORE	KED	LAXMIPUR	KAKRIGUMA		11 KV F-1 GOUDAGUDA	RURAL	OTHER							
845	TPSODL	JEYPORE	KED	LAXMIPUR	KAKRIGUMA		11 KV F-2 NALCO	RURAL	OTHER							
846	TPSODL	JEYPORE	KED	LAXMIPUR	KAKRIGUMA		11 KV F-3 KAKRIGUMA T	URBAN	OTHER							
847	TPSODL	JEYPORE	KED	LAXMIPUR	KAKRIGUMA		11 KV F-4 PANCHADA	RURAL	OTHER							
848	TPSODL	JEYPORE	MED	BALIMELA	MATHILI		11KV SALIM	RURAL	OTHER							
849	TPSODL	JEYPORE	MED	MALKANGIRI	MALKANGIRI		11 KV MV-7	RURAL	OTHER							
850	TPSODL	JEYPORE	MED	MALKANGIRI	MALKANGIRI		11KV EDUCATION	RURAL	OTHER							
851	TPSODL	JEYPORE	MED	MALKANGIRI	MALKANGIRI		11KV DAM SITE	URBAN	OTHER							
852	TPSODL	JEYPORE	MED	MALKANGIRI	MALKANGIRI		11KV DNK	RURAL	OTHER							
853	TPSODL	JEYPORE	MED	MALKANGIRI	MALKANGIRI		11 KV MALKANGIRI MEI	URBAN	OTHER							
854	TPSODL	JEYPORE	MED	MALKANGIRI	MALKANGIRI		11KV MALKANGIRI TOW	RURAL	OTHER							
855	TPSODL	JEYPORE	MED	MALKANGIRI	MALKANGIRI		11KV CHALLANGUDA	URBAN	OTHER							
856	TPSODL	JEYPORE	MED	MALKANGIRI	MALKANGIRI		11KV MICRO	RURAL	OTHER							
857	TPSODL	JEYPORE	NED	NABARANGPUR	TENTULIKHUNTI		11 KV F3 - TENTULIKHU	RURAL	OTHER							
858	TPSODL	JEYPORE	NED	NABARANGPUR	TENTULIKHUNTI		11 KV F5 - OLD ANCHAL	RURAL	OTHER							
859	TPSODL	JEYPORE	NED	NABARANGPUR	TENTULIKHUNTI		11 KV F4 - MENTRY	RURAL	OTHER							
860	TPSODL	JEYPORE	NED	NABARANGPUR	TENTULIKHUNTI		11 KV F2 - JHALIAGUDA	RURAL	OTHER							
861	TPSODL	JEYPORE	NED	NABARANGPUR	TENTULIKHUNTI		11 KV F1 - DIGI SALPA	RURAL	OTHER							
862	TPSODL	JEYPORE	NED	NABARANGPUR	DONGRABHEJA/ NANDAHANDI		11 KV F1 - DAHANA/DO	RURAL	OTHER							
863	TPSODL	JEYPORE	NED	NABARANGPUR	DONGRABHEJA/ NANDAHANDI		11 KV F2 - SORUGUDA	RURAL	OTHER							
864	TPSODL	JEYPORE	NED	NABARANGPUR	DONGRABHEJA/ NANDAHANDI		11 KV F3 - JAGANNATHI	RURAL	OTHER							
865	TPSODL	JEYPORE	NED	NABARANGPUR	DONGRABHEJA/ NANDAHANDI		11 KV F4 - NANDAHAND	RURAL	OTHER							
866	TPSODL	JEYPORE	MED	BALIMELA	KORUKONDA		11KV KORKUNDA	URBAN	OTHER							
867	TPSODL	JEYPORE	MED	BALIMELA	KORUKONDA		11KV MV-35	RURAL	OTHER							
868	TPSODL	JEYPORE	NED	PAPADAHANDI	TANDAGUDA		11 KV F1 - DONGRA	URBAN	OTHER							
869	TPSODL	JEYPORE	NED	PAPADAHANDI	TANDAGUDA		11 KV F2 - SIRSI	RURAL	OTHER							
870	TPSODL	JEYPORE	NED	PAPADAHANDI	TANDAGUDA		11 KV F3 - MANTRIGUD	URBAN	OTHER							
871	TPSODL	JEYPORE	NED	NABARANGPUR	SANAMASIGAON		11 KV F1 - DEULA	RURAL	OTHER							
872	TPSODL	JEYPORE	NED	NABARANGPUR	SANAMASIGAON		11 KV F2 - R.BEHERAGU	RURAL	OTHER							
873	TPSODL	JEYPORE	NED	NABARANGPUR	SANAMASIGAON		11 KV F3 - BADAMASIGA	RURAL	OTHER							
874	TPSODL	JEYPORE	NED	PAPADAHANDI	MEDENA		11 KV F1 - MANGARA C	RURAL	OTHER							
875	TPSODL	JEYPORE	NED	NABARANGPUR	NABARANGPUR		11 KV F1 - NABARANGP	URBAN	OTHER							
876	TPSODL	JEYPORE	NED	NABARANGPUR	NABARANGPUR		11 KV F2 - NABARANGP	URBAN	OTHER							
877	TPSODL	JEYPORE	NED	NABARANGPUR	NABARANGPUR		11 KV F3 - B.MALIGUDA	RURAL	OTHER							
878	TPSODL	JEYPORE	NED	NABARANGPUR	NABARANGPUR		11 KV F4 - S.MALIGUDA	RURAL	OTHER							
879	TPSODL	JEYPORE	NED	NABARANGPUR	NABARANGPUR		11 KV F5 - KENDUGUDA	RURAL	OTHER							
880	TPSODL	JEYPORE	NED	NABARANGPUR	PODAGAD (KHATIGUDA)		11 KV F1 - PERMANENT	RURAL	OTHER							
881	TPSODL	JEYPORE	NED	NABARANGPUR	PODAGAD (KHATIGUDA)		11 KV F2 - MORAN	RURAL	OTHER							
882	TPSODL	JEYPORE	NED	NABARANGPUR	PODAGAD (KHATIGUDA)		11 KV F3 - TEMPORARY	RURAL	OTHER							
883	TPSODL	JEYPORE	NED	NABARANGPUR	PODAGAD (KHATIGUDA)		11 KV F4 - PODAGADA	RURAL	OTHER							
884	TPSODL	JEYPORE	NED	NABARANGPUR	ANCHALGUMA		11 KV - F3- ANCHALGUU	RURAL	OTHER							
885	TPSODL	JEYPORE	NED	NABARANGPUR	ANCHALGUMA		11 KV - F1- KANGRA	RURAL	OTHER							
886	TPSODL	JEYPORE	NED	NABARANGPUR	ANCHALGUMA		11 KV F2-PATRAPUT	RURAL	OTHER							
887	TPSODL	BHANJANAGAR	PED	BALIGUDA	BARAKHAMBA		11KV F2 BARAKHAMBA	RURAL	OTHER							
888	TPSODL	RAYAGADA	RED	RAYAGADA	SERIGUDA		11 KV F-6 PITAMAHAL	RURAL	OTHER							
889	TPSODL	RAYAGADA	PKED	R.UDAYGIRI	BADAPADA		HEAD QUARTER	RURAL	OTHER							
890	TPSODL	BERHAMPUR	PSED	PURUSOTTAMPUR	PANDIA		11KV F4-AGRICULTURE	RURAL	OTHER							
891	TPSODL	JEYPORE	MED	MALKANGIRI	PADMAGIRI		11 KV F1 JHARAPALI	RURAL	OTHER							
892	TPSODL	JEYPORE	MED	MALKANGIRI	PADMAGIRI		11 KV F2 UDUPA	RURAL	OTHER							
893	TPSODL	JEYPORE	MED	MALKANGIRI	PADMAGIRI		11 KV F3 PADMAGIRI TO	RURAL	OTHER							
894	TPSODL	JEYPORE	KED	SUNABEDA	PADUA		11 KV F-1 CHATUA-HAT	RURAL	OTHER							
895	TPSODL	JEYPORE	KED	SUNABEDA	PADUA		11 KV F-2 PADUA TOWN	URBAN	OTHER							
896	TPSODL	BHANJANAGAR	PED	BALIGUDA	BARAKHAMBA		11 KV F-1 MEDIKIA	RURAL	OTHER							
897	TPSODL	BERHAMPUR CITY	BED-I	GOPALPUR	GOPALPUR	SEC21F01	11KV F1 GOPALPUR TOV	URBAN	OTHER							
898	TPSODL	BERHAMPUR CITY	BED-I	GOPALPUR	GOPALPUR	SEC21F02	11KV F2 BOXIPALLI	RURAL	OTHER							
899	TPSODL	BHANJANAGAR	PED	PHULBANI	GOCHAPADA		11 KV F-1 BALANDAPAD	RURAL	OTHER							
900	TPSODL	BHANJANAGAR	PED	PHULBANI	GOCHAPADA		11 KV F-2 SALAGUDA	RURAL	OTHER							
901	TPSODL	BHANJANAGAR	PED	PHULBANI	GOCHAPADA		11 KV F-3 GOCHAPADA	RURAL	OTHER							
902	TPSODL	BHANJANAGAR	PED	PHULBANI	GOCHAPADA		11 KV F-4 MUSULIPANG	RURAL	OTHER							
903	TPSODL	BERHAMPUR CITY	BED-I	GOPALPUR	GOPALPUR		11KV F3 NARAYANPUR	RURAL	OTHER							
904	TPSODL	BERHAMPUR CITY	BED-I	GOPALPUR	GOPALPUR		11 KV F4 HARIPUR	RURAL	OTHER							
905	TPSODL	ASKA	AED-I	ASKA	DHARAKOTE		11 KV F-4 MEDICAL	URBAN	OTHER							
906	TPSODL	JEYPORE	KED	SUNABEDA	PADUA		11 KV F-3 BADEL	RURAL	OTHER							
907	TPSODL	BHANJANAGAR					33KV Manamunda	MIXED	OTHER							
908	TPSODL	BHANJANAGAR					33KV Baghiapada	MIXED	OTHER							
909	TPSODL	BHANJANAGAR					33KV Purunakatak	MIXED	OTHER							
910	TPSODL	BHANJANAGAR					33KV Boudh	MIXED	OTHER							
911	TPSODL	BHANJANAGAR					33KV SOLAR-1	MIXED	OTHER							
912	TPSODL	BHANJANAGAR					33KV SOLAR-2	MIXED	OTHER							
913	TPSODL	BHANJANAGAR					33KV Phiringia	MIXED	OTHER							
914	TPSODL	BHANJANAGAR					33KV Baliguda	MIXED	OTHER							
915	TPSODL	BHANJANAGAR					33KV K.B.Pur	MIXED	OTHER							
916	TPSODL	BHANJANAGAR					33KV Soroda	MIXED	OTHER							
917	TPSODL	BHANJANAGAR					33KV Belaguntha	MIXED	OTHER							
918	TPSODL	BHANJANAGAR					33KV Bhanjanagar	MIXED	OTHER							
919	TPSODL	BHANJANAGAR					33KV Kanteipalli	MIXED	OTHER							
920	TPSODL	BHANJANAGAR					33KV Kalinga	MIXED	OTHER							
921	TPSODL	BHANJANAGAR					33KV Medical	MIXED	OTHER							
922	TPSODL	BHANJANAGAR					33KV Phulbani	MIXED	OTHER							
923	TPSODL	BHANJANAGAR					33KV Khajuripada	MIXED	OTHER							
924	TPSODL	BHANJANAGAR					33KV Boudh	MIXED	OTHER							
925	TPSODL	BHANJANAGAR					33KV Raikia	MIXED	OTHER							
926	TPSODL	BHANJANAGAR					33KV G.Udayagiri	MIXED	OTHER							
927	TPSODL	ASKA					33KV Chikiti	MIXED	OTHER							
928	TPSODL	ASKA					33KV Chikiti (Chikiti GSS	MIXED	OTHER							
929	TPSODL	ASKA					33KV Surangi	MIXED	OTHER							
930	TPSODL	ASKA					33KV Aska	MIXED	OTHER							
931	TPSODL	ASKA					33KV Hatiota	MIXED	OTHER							
932	TPSODL	ASKA					33KV Buguda	MIXED	OTHER							
933	TPSODL	BERHAMPUR					33KV Khallikote	MIXED	OTHER							

934	TPSODL	ASKA					33KV Nuagaon	MIXED	OTHER							
935	TPSODL	ASKA					33KV Soroda	MIXED	OTHER							
936	TPSODL	ASKA					33KV K.S. Nagar	MIXED	OTHER							
937	TPSODL	ASKA					33KV Budhamba	MIXED	OTHER							
938	TPSODL	ASKA					33KV Paikajamuna	MIXED	OTHER							
939	TPSODL	BERHAMPUR					33KV Badamadhapur	MIXED	OTHER							
940	TPSODL	BERHAMPUR					33KV Balia	MIXED	OTHER							
941	TPSODL	BERHAMPUR					33KV Tara Tarini	MIXED	OTHER							
942	TPSODL	BERHAMPUR					33KV Purusottampur	MIXED	OTHER							
943	TPSODL	BERHAMPUR					33KV Hinjilikatu	MIXED	OTHER							
944	TPSODL	BERHAMPUR					33KV Lift Irrigation	MIXED	OTHER							
945	TPSODL	BERHAMPUR CITY					33KV Berhampur-1	MIXED	OTHER							
946	TPSODL	BERHAMPUR CITY					33KV Berhampur-2	MIXED	OTHER							
947	TPSODL	BERHAMPUR CITY					33KV Nimakhandi	MIXED	OTHER							
948	TPSODL	BERHAMPUR CITY					33KV Luchapada	MIXED	OTHER							
949	TPSODL	BERHAMPUR CITY					33KV Hinjili	MIXED	OTHER							
950	TPSODL	BERHAMPUR CITY					33KV Chikiti	MIXED	OTHER							
951	TPSODL	BERHAMPUR CITY					33KV Kanisi	MIXED	OTHER							
952	TPSODL	ASKA					33KV Digapahandi	MIXED	OTHER							
953	TPSODL	ASKA					33KV Adapada	MIXED	OTHER							
954	TPSODL	ASKA					33KV Pudamari	MIXED	OTHER							
955	TPSODL	ASKA					33KV Sidheswar	MIXED	OTHER							
956	TPSODL	BERHAMPUR					33KV Chatrapur	MIXED	OTHER							
957	TPSODL	BERHAMPUR					33KV Badamadhapur	MIXED	OTHER							
958	TPSODL	BERHAMPUR					33KV TISCO	MIXED	OTHER							
959	TPSODL	BERHAMPUR					33KV Titanium	MIXED	OTHER							
960	TPSODL	BERHAMPUR					33KV Rambha	MIXED	OTHER							
961	TPSODL	BERHAMPUR					33KV Rambha	MIXED	OTHER							
962	TPSODL	BERHAMPUR					33KV Malud	MIXED	OTHER							
963	TPSODL	BERHAMPUR					33KV Ganjam	MIXED	OTHER							
964	TPSODL	BERHAMPUR CITY					33kV Medical	MIXED	OTHER							
965	TPSODL	BERHAMPUR CITY					33kV Ambapua	MIXED	OTHER							
966	TPSODL	BERHAMPUR CITY					33kV MKCG Express	MIXED	OTHER							
967	TPSODL	BERHAMPUR CITY					33kV MES	MIXED	OTHER							
968	TPSODL	BERHAMPUR CITY					33kV Bhanjavihar	MIXED	OTHER							
969	TPSODL	BERHAMPUR CITY					33kV Narendrapur	MIXED	OTHER							
970	TPSODL	JEYPORE					33kV Upper Kolab-1	MIXED	OTHER							
971	TPSODL	JEYPORE					33kV Upper Kolab-2	MIXED	OTHER							
972	TPSODL	JEYPORE					33kV Jeypore-1	MIXED	OTHER							
973	TPSODL	JEYPORE					33kV Jeypore-2	MIXED	OTHER							
974	TPSODL	JEYPORE					33kV Jeypore-3	MIXED	OTHER							
975	TPSODL	JEYPORE					33kV Sewa-1	MIXED	OTHER							
976	TPSODL	JEYPORE					33kV Sewa-2	MIXED	OTHER							
977	TPSODL	JEYPORE					33kV Boriguma	MIXED	OTHER							
978	TPSODL	JEYPORE					33kV Kundra	MIXED	OTHER							
979	TPSODL	JEYPORE					33kV Boiparriguda	MIXED	OTHER							
980	TPSODL	JEYPORE					33kV Malkangiri	MIXED	OTHER							
981	TPSODL	JEYPORE					33kV Chitrakonda	MIXED	OTHER							
982	TPSODL	JEYPORE					33kV Mathili	MIXED	OTHER							
983	TPSODL	JEYPORE					33kV OHPC Balimela	MIXED	OTHER							
984	TPSODL	JEYPORE					33kV Kalimela	MIXED	OTHER							
985	TPSODL	JEYPORE					33kV Malkangiri	MIXED	OTHER							
986	TPSODL	JEYPORE					33kV Padmagiri	MIXED	OTHER							
987	TPSODL	JEYPORE					33kV Dabugaon	MIXED	OTHER							
988	TPSODL	JEYPORE					33kV Medena	MIXED	OTHER							
989	TPSODL	JEYPORE					33kV Papadahandi	MIXED	OTHER							
990	TPSODL	JEYPORE					33kV Kodinga	MIXED	OTHER							
991	TPSODL	RAYAGADA					33kV Gumuda	MIXED	OTHER							
992	TPSODL	RAYAGADA					33kV Padampur	MIXED	OTHER							
993	TPSODL	RAYAGADA					33kV Gunupur	MIXED	OTHER							
994	TPSODL	RAYAGADA					33kV Gudari	MIXED	OTHER							
995	TPSODL	JEYPORE					33kV Laxmipur	MIXED	OTHER							
996	TPSODL	JEYPORE					33kV Tikiri	MIXED	OTHER							
997	TPSODL	JEYPORE					33kV Podagada	MIXED	OTHER							
998	TPSODL	JEYPORE					33kV Dasamantpur	MIXED	OTHER							
999	TPSODL	JEYPORE					33kV Nabarangpur-1	MIXED	OTHER							
1000	TPSODL	JEYPORE					33kV Nabarangpur-2	MIXED	OTHER							
1001	TPSODL	JEYPORE					33kV Indravati	MIXED	OTHER							
1002	TPSODL	JEYPORE					33kV Podagada	MIXED	OTHER							
1003	TPSODL	JEYPORE					33kV Mukhiguda	MIXED	OTHER							
1004	TPSODL	RAYAGADA					33kV Paralakhemundi	MIXED	OTHER							
1005	TPSODL	RAYAGADA					33kV Daringibadi	MIXED	OTHER							
1006	TPSODL	RAYAGADA					33kV Paralakhemundi (	MIXED	OTHER							
1007	TPSODL	RAYAGADA					33kV Paralakhemundi (	MIXED	OTHER							
1008	TPSODL	RAYAGADA					33kV Guma	MIXED	OTHER							
1009	TPSODL	RAYAGADA					33kV Kasinagar	MIXED	OTHER							
1010	TPSODL	RAYAGADA					33kV Upalada	MIXED	OTHER							
1011	TPSODL	RAYAGADA					33kV Rayagada-1	MIXED	OTHER							
1012	TPSODL	RAYAGADA					33kV Rayagada-2	MIXED	OTHER							
1013	TPSODL	RAYAGADA					33kV Gunupur	MIXED	OTHER							
1014	TPSODL	RAYAGADA					33kV Seriguda	MIXED	OTHER							
1015	TPSODL	JEYPORE					33kV Umerkote	MIXED	OTHER							
1016	TPSODL	JEYPORE					33kV Adhikariguda	MIXED	OTHER							
1017	TPSODL	JEYPORE					33kV Jharigaon	MIXED	OTHER							
1018	TPSODL	JEYPORE					33kV Beheda	MIXED	OTHER							
1019	TPSODL	JEYPORE					33kV Ampavali	MIXED	OTHER							
1020	TPSODL	JEYPORE					33kV Pottangi	MIXED	OTHER							
1021	TPSODL	JEYPORE					33kV Kunduli	MIXED	OTHER							
1022	TPSODL	JEYPORE					33kV Nandapur	MIXED	OTHER							
1023	TPSODL	JEYPORE					33kV Koraput	MIXED	OTHER							
1024	TPSODL	JEYPORE					33kV OMP	MIXED	OTHER							
1025	TPSODL	JEYPORE					33kV Laxmipur	MIXED	OTHER							
1026	TPSODL	JEYPORE					33kV Nandapur	MIXED	OTHER							
1027	TPSODL	JEYPORE					33kV Sunki	MIXED	OTHER							

1028	TPSODL	RAYAGADA					33kV Siliput	MIXED	OTHER							
1029	TPSODL	RAYAGADA					33kV Amlabhata	MIXED	OTHER							
1030	TPSODL	RAYAGADA					33kV Bisam Katak	MIXED	OTHER							
1031	TPSODL	RAYAGADA					33kV Kasipur	MIXED	OTHER							
1032	TPSODL	JEYPORE					33kV KALIMELA	MIXED	OTHER							
1033	TPSODL	JEYPORE					33kV BODILI	MIXED	OTHER							
1034	TPSODL	RAYAGADA					33 KV JALTAR	MIXED	OTHER							
1035	TPSODL	BERHAMPUR					33KV PODINGI	MIXED	OTHER							
1036	TPSODL	BERHAMPUR					33KV HINJILICUT	MIXED	OTHER							

Details of DT-wise losses (please add more rows as per requirement)

Zone Name	Circle name	Division name	Name of the Sub-division	Name of the Sub-station	Substation Code	Name of the 11 kV Feeder	Feeder Code	Name of the Location where DT situated	DT code	DT Capacity (kVA)	Predominant consumer type of DT (Domestic/Industrial/Agriculture/Mixed)	Type of metering AMR/AMI/ Communicable/Conventional metered/Unmetered	Status of Meter- whether Functional (Yes/No)	% of data received automatically (if AMR/AMI)	No. of Connected Consumers	Input Energy (MU) (A)	Billed Energy (MU) (B)	Loss (MU) (A-B)	% DT Loss (A-B)/A
	City	BERHAMPUF	SUB.DIV.NO-2	AMBAPUA	SEC09	AMBAPUA	SEC09F02	SRINIVAS SUBUDHI	20638	250-Kva									
	City	BERHAMPUF	SUB.DIV.NO-2	AMBAPUA	SEC09	AMBAPUA	SEC09F02	BAJPAYEE BAJAJ 2	20640	250-Kva									
	City	BERHAMPUF	SUB.DIV.NO-2	AMBAPUA	SEC09	AMBAPUA	SEC09F02	PUMP HOUSE KHODASINGI	20642	63-Kva									
	City	BERHAMPUF	SUB.DIV.NO-2	AMBAPUA	SEC09	AMBAPUA	SEC09F02	NIRMAN UDYOG	20644	25-Kva									
	City	BERHAMPUF	SUB.DIV.NO-2	AMBAPUA	SEC09	AMBAPUA	SEC09F02	BANCHANIDHI NAGAR	20646	500-Kva									
	City	BERHAMPUF	SUB.DIV.NO-2	AMBAPUA	SEC09	AMBAPUA	SEC09F02	PRATHA BANCHANIDHI NAGAR	20648	100-Kva									
	City	BERHAMPUF	SUB.DIV.NO-2	AMBAPUA	SEC09	AMBAPUA	SEC09F02	JYOTI CLASSIC APPARMENT	20650	250-Kva									
	City	BERHAMPUF	SUB.DIV.NO-2	AMBAPUA	SEC09	AMBAPUA	SEC09F02	MAHIMA VIHAR	20652	250-Kva									
	City	BERHAMPUF	SUB.DIV.NO-2	AMBAPUA	SEC09	AMBAPUA	SEC09F02	PARSURAM VIHAR	20654	100-Kva									
	City	BERHAMPUF	SUB.DIV.NO-2	AMBAPUA	SEC09	AMBAPUA	SEC09F02	BIMA NAGAR IPDS(DR STREET)	20656	100-Kva									
	City	BERHAMPUF	SUB.DIV.NO-2	AMBAPUA	SEC09	AMBAPUA	SEC09F02	BASANTA BIHAR MAIN ROAD	20658	100-Kva									
	City	BERHAMPUF	SUB.DIV.NO-2	AMBAPUA	SEC09	AMBAPUA	SEC09F02	SARDHABALI	20660	16-Kva									
	City	BERHAMPUF	SUB.DIV.NO-2	AMBAPUA	SEC09	AMBAPUA	SEC09F02	SARDHABALI	20662	25-Kva									
	City	BERHAMPUF	SUB.DIV.NO-2	AMBAPUA	SEC09	AMBAPUA	SEC09F02	SARDHABALI	20664	25-Kva									
	City	BERHAMPUF	SUB.DIV.NO-2	AMBAPUA	SEC09	AMBAPUA	SEC09F02	BASANTA BIHAR 4TH LANE	20666	16-Kva									
	City	BERHAMPUF	SUB.DIV.NO-2	AMBAPUA	SEC09	AMBAPUA	SEC09F02	SHARADHABALI	20668	16-Kva									
	City	BERHAMPUF	SUB.DIV.NO-2	AMBAPUA	SEC09	AMBAPUA	SEC09F02	SARADABALI 1ST LANE	20670	16-Kva									
	City	BERHAMPUF	SUB.DIV.NO-2	AMBAPUA	SEC09	AMBAPUA	SEC09F02	SARADABALI 1ST LANE	20672	16-Kva									
	City	BERHAMPUF	SUB.DIV.NO-2	AMBAPUA	SEC09	AMBAPUA	SEC09F02	1ST LANE BASANTA BIHAR	20674	16-Kva									
	City	BERHAMPUF	SUB.DIV.NO-2	AMBAPUA	SEC09	AMBAPUA	SEC09F02	BASANTA BIHAR 2ND LANE	20676	16-Kva									
	City	BERHAMPUF	SUB.DIV.NO-2	AMBAPUA	SEC09	AMBAPUA	SEC09F02	BIMA NAGAR 1ST LANE	20678	16-Kva									
	City	BERHAMPUF	SUB.DIV.NO-2	AMBAPUA	SEC09	AMBAPUA	SEC09F02	NEAR KANIGANAGAR PUMP HOUSE	20680	25-Kva									
	City	BERHAMPUF	SUB.DIV.NO-2	AMBAPUA	SEC09	AMBAPUA	SEC09F02	KANIGANAGAR	20682	16-Kva									
	City	BERHAMPUF	SUB.DIV.NO-2	AMBAPUA	SEC09	AMBAPUA	SEC09F02	KANIGANAGAR	20684	16-Kva									
	City	BERHAMPUF	SUB.DIV.NO-2	AMBAPUA	SEC09	AMBAPUA	SEC09F02	KANIGANAGAR	20686	16-Kva									
	City	BERHAMPUF	SUB.DIV.NO-2	AMBAPUA	SEC09	AMBAPUA	SEC09F02	KANIGANAGAR	20688	16-Kva									
	City	BERHAMPUF	SUB.DIV.NO-2	AMBAPUA	SEC09	AMBAPUA	SEC09F02	KANIGANAGAR	20690	16-Kva									
	City	BERHAMPUF	SUB.DIV.NO-2	AMBAPUA	SEC09	AMBAPUA	SEC09F02	KANIGANAGAR	20692	16-Kva									
	City	BERHAMPUF	SUB.DIV.NO-2	AMBAPUA	SEC09	AMBAPUA	SEC09F02	RAMAKRUSHNANAGAR	20694	16-Kva									
	City	BERHAMPUF	SUB.DIV.NO-2	AMBAPUA	SEC09	AMBAPUA	SEC09F02	KALING NAGAR 4 TH LANE	20696	16-Kva									
	City	BERHAMPUF	SUB.DIV.NO-2	AMBAPUA	SEC09	AMBAPUA	SEC09F02	KALING NAGAR 4 TH LANE	20698	16-Kva									
	City	BERHAMPUF	SUB.DIV.NO-2	AMBAPUA	SEC09	AMBAPUA	SEC09F02	1ST LANE	20700	16-Kva									
	City	BERHAMPUF	SUB.DIV.NO-2	AMBAPUA	SEC09	AMBAPUA	SEC09F02	BHAGATH SHING NAGAR	20702	16-Kva									
	City	BERHAMPUF	GOPALPUR	AMBAPUA	SEC09	AMBAPUA	SEC09F02	BHAGATH SHING NAGAR BADAGUMULA	20704	10-Kva									
	City	BERHAMPUF	SUB.DIV.NO-2	AMBAPUA	SEC09	AMBAPUA	SEC09F02	8 HILLS CITY NEAR CHANDI MANDIR	20706	25-Kva									
	City	BERHAMPUF	GOPALPUR	AMBAPUA	SEC09	AMBAPUA	SEC09F02	BEHERA MADAM	20708	16-Kva									
	City	BERHAMPUF	GOPALPUR	AMBAPUA	SEC09	AMBAPUA	SEC09F02	BADAGUMULA NEAR WATER SUPPLY	20710	25-Kva									
	City	BERHAMPUF	GOPALPUR	AMBAPUA	SEC09	AMBAPUA	SEC09F02	BADAGUMULA	20712	16-Kva									
	City	BERHAMPUF	GOPALPUR	AMBAPUA	SEC09	AMBAPUA	SEC09F02	SUDESHNA PANDA	20714	10-Kva									
	City	BERHAMPUF	GOPALPUR	AMBAPUA	SEC09	AMBAPUA	SEC09F02	BURNT TRANSFORMER BADAGUMULA	20716	10-Kva									
	City	BERHAMPUF	GOPALPUR	AMBAPUA	SEC09	AMBAPUA	SEC09F02	BADAGUMULA RADHA KRISNA MANDIR	20718	10-Kva									
	City	BERHAMPUF	GOPALPUR	AMBAPUA	SEC09	AMBAPUA	SEC09F02	BADAGUMULA DALUA STREET	20720	16-Kva									
	City	BERHAMPUF	GOPALPUR	AMBAPUA	SEC09	AMBAPUA	SEC09F02	BADAGUMULA DALUA STREET	20722	16-Kva									
	City	BERHAMPUF	SUB.DIV.NO-2	AMBAPUA	SEC09	AMBAPUA	SEC09F02	SUBASRI SUK	20724	250-Kva									
	City	BERHAMPUF	SUB.DIV.NO-2	AMBAPUA	SEC09	AMBAPUA	SEC09F02	ROLANDO INSTITUTE OF PHARMA. SCIENC	20726	100-Kva									
	City	BERHAMPUF	SUB.DIV.NO-2	AMBAPUA	SEC09	AMBAPUA	SEC09F02	ROLANDO INSTITUTE OF PHARMA. SCIENC	20728	100-Kva									
	City	BERHAMPUF	SUB.DIV.NO-2	AMBAPUA	SEC09	AMBAPUA	SEC09F02	BSNL	20730	25-Kva									
	City	BERHAMPUF	SUB.DIV.NO-2	AMBAPUA	SEC09	AMBAPUA	SEC09F02	SHARADHABALI PHD	20732	25-Kva									
	City	BERHAMPUF	SUB.DIV.NO-2	AMBAPUA	SEC09	AMBAPUA	SEC09F02	SHARADHABALI 2ND LANE-1	20734	25-Kva									
	City	BERHAMPUF	SUB.DIV.NO-2	AMBAPUA	SEC09	AMBAPUA	SEC09F02	SARADABALI 1ST LANE	20736	16-Kva									
	City	BERHAMPUF	SUB.DIV.NO-2	AMBAPUA	SEC09	AMBAPUA	SEC09F02	BIMA NAGAR 3RD LANE NEAR KBR PLAZA	20738	25Kva									
	City	BERHAMPUF	SUB.DIV.NO-2	AMBAPUA	SEC09	AMBAPUA	SEC09F02	BIMA NAGAR 3RD LANE	20740	315-Kva									
	City	BERHAMPUF	SUB.DIV.NO-2	AMBAPUA	SEC09	AMBAPUA	SEC09F02	BASANTA BIHAR 4TH LANE	20742	100-Kva									
	City	BERHAMPUF	SUB.DIV.NO-2	AMBAPUA	SEC09	AMBAPUA	SEC09F02	PAKS ROYAL VENTURE	20744	315-Kva									

	City	BERHAMPUF	SUB.DIV.NO-2	AMBAPUA	SEC09	AMBAPUA	SEC09F02	BEHIND BIMA NAGAR 1ST LANE	20746	63-Kva									
	City	BERHAMPUF	SUB.DIV.NO-2	AMBAPUA	SEC09	AMBAPUA	SEC09F02	BIMA NAGAR FRONT OF 1ST LANE	20748	16-Kva									
	City	BERHAMPUF	SUB.DIV.NO-2	AMBAPUA	SEC09	AMBAPUA	SEC09F02	BAJPAYEE BAJAJ 1	20750	500-Kva									
	City	BERHAMPUF	SUB.DIV.NO-2	AMBAPUA	SEC09	AMBAPUA	SEC09F02	SHARADHABALI 2ND LANE-2	20752	315-Kva									
	City	BERHAMPUF	SUB.DIV.NO-2	AMBAPUA	SEC09	AMBAPUA	SEC09F02	BIMA NAGAR FRONT OF 1ST LANE	20754	16-Kva									
	City	BERHAMPUF	SUB.DIV.NO-2	AMBAPUA	SEC09	AMBAPUA	SEC09F02	NEAR 1ST LANE BASANTA BIHAR	20756	16-Kva									
	City	BERHAMPUF	SUB.DIV.NO-2	AMBAPUA	SEC09	AMBAPUA	SEC09F02	SARADABALI 1ST LANE	20758	16-Kva									
	City	BERHAMPUF	SUB.DIV.NO-2	AMBAPUA	SEC09	AMBAPUA	SEC09F02	SARADHABALI 2ND LANE	20760	16-Kva									
	City	BERHAMPUF	SUB.DIV.NO-2	AMBAPUA	SEC09	AMBAPUA	SEC09F02	SARADHABALI 2ND LANE	20762	16-Kva									
	City	BERHAMPUF	SUB.DIV.NO-2	AMBAPUA	SEC09	AMBAPUA	SEC09F02	SARDHABALI	20764	16-Kva									
	City	BERHAMPUF	GOPALPUR	AMBAPUA	SEC09	AMBAPUA	SEC09F02	BADAGUMULA DALUA STREET SQURE	20766	16-Kva									
	City	BERHAMPUF	GOPALPUR	AMBAPUA	SEC09	AMBAPUA	SEC09F02	BADAGUMULA DALUA STREET	20768	16-Kva									
	City	BERHAMPUF	GOPALPUR	AMBAPUA	SEC09	AMBAPUA	SEC09F02	BADAGUMULA BRUNT KUMBHAR STREET	20770	16-Kva									
	City	BERHAMPUF	GOPALPUR	AMBAPUA	SEC09	AMBAPUA	SEC09F02	BADAGUMULA KOTHA GHAR	20772	16-Kva									
	City	BERHAMPUF	GOPALPUR	AMBAPUA	SEC09	AMBAPUA	SEC09F02	BADAGUMULA BRUNT KUMBHAR STREET	20774	16-Kva									
	City	BERHAMPUF	GOPALPUR	AMBAPUA	SEC09	AMBAPUA	SEC09F02	BADAGUMULA KALI MANDIR	20776	16-Kva									
	City	BERHAMPUF	SUB.DIV.NO-2	AMBAPUA	SEC09	AMBAPUA	SEC09F02	BIMA NAGAR NEAR 4TH LANE	20778	25-Kva									
	City	BERHAMPUF	SUB.DIV.NO-2	AMBAPUA	SEC09	AMBAPUA	SEC09F02	DHANVI APARTMENT	20780	100-Kva									
	City	BERHAMPUF	SUB.DIV.NO-2	AMBAPUA	SEC09	AMBAPUA	SEC09F02	VIJAY TOWER 2	20782	250-Kva									
	City	BERHAMPUF	SUB.DIV.NO-2	AMBAPUA	SEC09	AMBAPUA	SEC09F02	SARDHABALI 2ND LANE CAPEX	20784	25-Kva									
	City	BERHAMPUF	SUB.DIV.NO-2	AMBAPUA	SEC09	AMBAPUA	SEC09F02	SARDHABALI	20786	25-Kva									
	City	BERHAMPUF	SUB.DIV.NO-2	AMBAPUA	SEC09	AMBAPUA	SEC09F02	SARDHABALI	20788	315-Kva									
	City	BERHAMPUF	SUB.DIV.NO-2	AMBAPUA	SEC09	AMBAPUA	SEC09F02	SARDHABALI	20790	315-Kva									
	City	BERHAMPUF	SUB.DIV.NO-2	AMBAPUA	SEC09	AMBAPUA	SEC09F02	SARDHABALI 6TH LANE END	20792	25-Kva									
	City	BERHAMPUF	SUB.DIV.NO-2	AMBAPUA	SEC09	AMBAPUA	SEC09F02	NANDI GHOSH JAYA APPARTMENT	20794	63-Kva									
	City	BERHAMPUF	SUB.DIV.NO-2	AMBAPUA	SEC09	AMBAPUA	SEC09F02	NANDI GHOSH SURUYA APP.	20796	100-Kva									
	City	BERHAMPUF	SUB.DIV.NO-2	AMBAPUA	SEC09	AMBAPUA	SEC09F02	WTT INFO SERVICES LTD TOWER	20798	25-Kva									
	City	BERHAMPUF	SUB.DIV.NO-2	AMBAPUA	SEC09	AMBAPUA	SEC09F02	HANSHIKA WINE SHOP	20800	500-Kva									
	City	BERHAMPUF	SUB.DIV.NO-2	AMBAPUA	SEC09	AMBAPUA	SEC09F02	RAILWAY PUMP HOUSE	20802	63-Kva									
	City	BERHAMPUF	SUB.DIV.NO-2	AMBAPUA	SEC09	AMBAPUA	SEC09F02	SHREYA RESIDENCY	20804	200-Kva									
	City	BERHAMPUF	SUB.DIV.NO-2	AMBAPUA	SEC09	AMBAPUA	SEC09F02	SARADA PATRO	20806	100-Kva									
	City	BERHAMPUF	SUB.DIV.NO-2	AMBAPUA	SEC09	AMBAPUA	SEC09F02	BIMA NAGAR NEAR 4TH LANE	20808	315-Kva									
	City	BERHAMPUF	SUB.DIV.NO-2	AMBAPUA	SEC09	AMBAPUA	SEC09F02	KANIGANAGAR 1ST LANE	20810	100-Kva									
	City	BERHAMPUF	SUB.DIV.NO-2	AMBAPUA	SEC09	AMBAPUA	SEC09F02	NEAR KANIGANAGAR PUMP HOUSE	20812	100-Kva									
	City	BERHAMPUF	SUB.DIV.NO-2	AMBAPUA	SEC09	AMBAPUA	SEC09F02	KANIGANAGAR PUMP HOUSE	20814	250-Kva									
	City	BERHAMPUF	SUB.DIV.NO-2	AMBAPUA	SEC09	AMBAPUA	SEC09F02	BHARAT BIHAR	20816	250-Kva									
	City	BERHAMPUF	SUB.DIV.NO-2	AMBAPUA	SEC09	AMBAPUA	SEC09F02	RAMAKRUSHNANAGAR IPDS	20818	315-Kva									
	City	BERHAMPUF	SUB.DIV.NO-2	AMBAPUA	SEC09	AMBAPUA	SEC09F02	BRICKS INDUSTRY	20820	25-Kva									
	City	BERHAMPUF	SUB.DIV.NO-2	AMBAPUA	SEC09	AMBAPUA	SEC09F02	TTA BHATT	20822	250-Kva									
	City	BERHAMPUF	SUB.DIV.NO-2	AMBAPUA	SEC09	AMBAPUA	SEC09F02	KALING NAGAR 3rd LANE TOWER	20824	25-Kva									
	City	BERHAMPUF	SUB.DIV.NO-2	AMBAPUA	SEC09	AMBAPUA	SEC09F02	KALING NAGAR 4TH LANE	20826	200-Kva									
	City	BERHAMPUF	SUB.DIV.NO-2	AMBAPUA	SEC09	AMBAPUA	SEC09F02	KALING NAGAR 4TH LANE SHIVA HABITATS	20828	500-Kva									
	City	BERHAMPUF	SUB.DIV.NO-2	AMBAPUA	SEC09	AMBAPUA	SEC09F02	KALING NAGAR 4TH LANE SHIVA HABITATS	20830	200-Kva									
	City	BERHAMPUF	SUB.DIV.NO-2	AMBAPUA	SEC09	AMBAPUA	SEC09F02	RAMAKRUSHNA PETROL PUMP	20832	25-Kva									
	City	BERHAMPUF	SUB.DIV.NO-2	BIDYUTPURI	SEC07	KHODA SINGH	SEC07F02	RAJA RANI PLAZA	20834	100-Kva									
	City	BERHAMPUF	SUB.DIV.NO-2	BIDYUTPURI	SEC07	KHODA SINGH	SEC07F02	VODAPHONE TOWER	20836	25-Kva									
	City	BERHAMPUF	SUB.DIV.NO-2	BIDYUTPURI	SEC07	KHODA SINGH	SEC07F02	AIRTEL TOWER	20838	25-Kva									
	City	BERHAMPUF	SUB.DIV.NO-2	BIDYUTPURI	SEC07	KHODA SINGH	SEC07F02	LIC BUILDING	20840	200-Kva									
	City	BERHAMPUF	SUB.DIV.NO-2	BIDYUTPURI	SEC07	KHODA SINGH	SEC07F02	LIC BUILDING	20842	500-Kva									
	City	BERHAMPUF	SUB.DIV.NO-2	BIDYUTPURI	SEC07	KHODA SINGH	SEC07F02	UCP	20844	250-Kva									
	City	BERHAMPUF	SUB.DIV.NO-2	BIDYUTPURI	SEC07	KHODA SINGH	SEC07F02	JAI DURGA NAGAR	20846	100-Kva									
	City	BERHAMPUF	SUB.DIV.NO-2	BIDYUTPURI	SEC07	KHODA SINGH	SEC07F02	JAI DURGA NAGAR	20848	250-Kva									
	City	BERHAMPUF	SUB.DIV.NO-2	BIDYUTPURI	SEC07	KHODA SINGH	SEC07F02	JAI DURGA NAGAR	20850	100-Kva									
	City	BERHAMPUF	SUB.DIV.NO-2	BIDYUTPURI	SEC07	KHODA SINGH	SEC07F02	PANDA COLONY	20852	100-Kva									
	City	BERHAMPUF	SUB.DIV.NO-2	BIDYUTPURI	SEC07	KHODA SINGH	SEC07F02	PANDA COLONY	20854	315-Kva									
	City	BERHAMPUF	SUB.DIV.NO-2	BIDYUTPURI	SEC07	KHODA SINGH	SEC07F02	HARI BANDHU APPERTMENTS	20856	500-Kva									
	City	BERHAMPUF	SUB.DIV.NO-2	BIDYUTPURI	SEC07	KHODA SINGH	SEC07F02	PANDA COLONY MUNICIPALITY APARTMEN	20858	100-Kva									
	City	BERHAMPUF	SUB.DIV.NO-2	BIDYUTPURI	SEC07	KHODA SINGH	SEC07F02	TOTA SAHI	20860	315-Kva									
	City	BERHAMPUF	SUB.DIV.NO-2	AMBAPUA	SEC09	AMBAPUA	SEC09F02	POLICE COLONY	20862	63-Kva									
	City	BERHAMPUF	SUB.DIV.NO-2	AMBAPUA	SEC09	AMBAPUA	SEC09F02	POLICE COLONY	20864	100-Kva									
	City	BERHAMPUF	SUB.DIV.NO-2	AMBAPUA	SEC09	AMBAPUA	SEC09F02	POLICE COLONY	20866	100-Kva									
	City	BERHAMPUF	SUB.DIV.NO-2	AMBAPUA	SEC09	AMBAPUA	SEC09F02	YAMAHA SHOWROOM	20868	100-Kva									